City of Stuart

AGENDA

REGULAR MEETING OF THE STUART CITY COMMISSION
JULY 22, 2024
AT 5:30 PM
COMMISSION CHAMBERS
121 SW FLAGLER AVE.
STUART, FLORIDA 34994

CITY COMMISSION

Mayor Rebecca S. Bruner
Vice Mayor Campbell Rich
Commissioner Eula R. Clarke
Commissioner Christopher Collins
Commissioner Troy McDonald

ADMINISTRATIVE

City Manager, Michael J. Mortell
City Attorney, Lee J. Baggett
City Clerk, Mary R. Kindel

Agenda items are available on our website at http://www.cityofstuart.us
Phone: (772) 288-5306. Fax: (772) 288-5305. E-mail: mkindel@ci.stuart.fl.us

In compliance with the Americans with Disabilities Act (ADA), anyone who needs a special accommodation to attend this meeting should contact the City's ADA coordinator at 772-288-5306 at least 48 hours in advance of the meeting, excluding Saturday and Sunday.

If a person decides to appeal any decision made by the Board with respect to any matter considered at this meeting, he will need a record of the proceeding, and that for such purpose he may need to ensure that a verbatim record of the proceedings is made, which record includes the testimony and evidence upon which the appeal is to be based.

(RC) next to an item denotes there is a City Code requirement for a Roll Call vote.
(QJ) next to an item denotes that it is a quasi-judicial matter or public hearing.

ROLL CALL

INVOCATION

PLEDGE OF ALLEGIANCE

PRESENTATIONS

1. CITY OF STUART WELLFIELD AND WATER PLANT EVALUATION

COMMENTS BY CITY COMMISSIONERS

COMMENTS BY CITY MANAGER

APPROVAL OF AGENDA

COMMENTS FROM THE PUBLIC (Non-Agenda Related) (3 Minutes Max.)

CONSENT CALENDAR

2. APPROVAL OF 07/08/2024 SCM MINUTES AND 07/08/2024 CCM MINUTES (RC)

3. AWARD OF ITB# 2024-106: WATER RECLAMATION FACILITY HEADWORKS REHAB-PHASE 1 (RC):

RESOLUTION No. 67-2024; A RESOLUTION OF THE CITY COMMISSION OF THE CITY OF STUART, FLORIDA APPROVING THE AWARD OF ITB #2024-106, CITY OF STUART WATER RECLAMATION FACILITY HEADWORKS REHAB-PHASE 1 S TO THE LOWEST, MOST RESPONSIVE AND RESPONSIBLE BIDDER WITH A TOTAL UNIT PRICE OF $1,497,250.00 TO RAZORBACK LLC. OF TARPON, FLORIDA; PROVIDING AN EFFECTIVE DATE; AND FOR OTHER PURPOSES.

4. AUTHORIZATION TO APPLY FOR FLORIDA DEP TRAIL-GO PROGRAM GRANT (RC):

RESOLUTION No. 68-2024: A RESOLUTION OF THE CITY COMMISSION OF THE CITY OF STUART, FLORIDA, AUTHORIZING THE CITY OF STUART TO SUBMIT AN APPLICATION FOR A FLORIDA DEPARTMENT OF ENVIRONMENTAL PROTECTION TRAIL-GO PROGRAM GRANT FOR THE MAINTENANCE AND OPERATION OF CITY TRAILS; AND AUTHORIZING EXECUTION OF A GRANT AGREEMENT IF AWARDED; AND FURTHER AUTHORIZING ANY MINOR AMENDMENTS TO THE GRANT AGREEMENT TO FACILITATE THE PROGRAM AS APPROPRIATE; PROVIDING AN EFFECTIVE DATE, AND FOR OTHER PURPOSES.

5. LETTER OF SUPPORT FOR MARTIN ARTS GRANT APPLICATION (RC):

RESOLUTION No. 70-2024; A RESOLUTION OF THE CITY COMMISSION OF THE CITY OF STUART, FLORIDA, AUTHORIZING A LETTER OF SUPPORT TO MARTIN ARTS TO ACCOMPANY THEIR NATIONAL ENDOWMENT FOR THE ARTS OUR TOWN PROGRAM GRANT APPLICATION; PROVIDING AN EFFECTIVE DATE, AND FOR OTHER PURPOSES.

END OF CONSENT CALENDAR

COMMISSION ACTION

6. ACCEPTING A STATE APPROPRIATION FROM THE FLORIDA DEPARTMENT OF COMMERCE FOR GUY DAVIS PARK IMPROVEMENTS (RC):

RESOLUTION No. 62-2024; A RESOLUTION OF THE CITY COMMISSION OF THE CITY OF STUART, FLORIDA ACCEPTING A STATE APPROPRIATION OF $500,000.00 FROM THE FLORIDA DEPARTMENT OF COMMERCE FOR PARK IMPROVEMENTS AT GUY DAVIS PARK; AUTHORIZING THE CITY MANAGER TO EXECUTE A GRANT AGREEMENT WITH THE FLORIDA DEPARTMENT OF COMMERCE AS A CONDITION OF AWARD; PROVIDING AN EFFECTIVE DATE; AND FOR OTHER PURPOSES.

7. RELEASE OF UNITY OF TITLE FOR LOTS 1 AND 2 OF THE NORTON'S LANDING PLAT (RC):

RESOLUTION No. 69-2024; A RESOLUTION OF THE CITY COMMISSION OF THE CITY OF STUART, FLORIDA RELEASING A UNITY OF TITLE FOR LOTS 1 AND 2 OF THE JANUARY 1988 NORTON'S LANDING PLAT, PROVIDING AN EFFECTIVE DATE, AND FOR OTHER PURPOSES.

DISCUSSION AND DELIBERATION

ADJOURNMENT

WHAT IS CIVILITY? Civility is caring about one's identity, needs and beliefs without degrading someone else's in the process. Civility is more than merely being polite. Civility requires staying "present" even with those persons with whom we have deep-rooted and perhaps strong disagreements. It is about constantly being open to hear, learn, teach and change. It seeks common ground as a beginning point for dialogue. It is patience, grace, and strength of character. Civility is practiced in our City Hall.

PUBLIC COMMENT: If a member of the public wishes to comment upon ANY subject matter, including quasi-judicial matters, please submit a Request to Speak form. These forms are available in the back of the Commission Chambers, and should be given to the City Clerk prior to introduction of the item number you would like to address.

CONSENT CALENDAR: Those matters included under the Consent Calendar are self-explanatory, non-controversial, and are not expected to require review or discussion. All items will be enacted by one motion. If discussion on an item is desired by any City Commissioner that item may be removed by a City Commissioner from the Consent Calendar and considered separately. If an item is quasi-judicial it may be removed by a Commissioner or any member of the public from the Consent Calendar and considered separately.

QUASI-JUDICIAL HEARINGS: Some of the matters on the Agenda may be "quasi-judicial" in nature. City Commissioners will disclose all ex-parte communications, and may be subject to voir dire by any interested party regarding those communications. All witnesses testifying will be "sworn" prior to their testimony. However, the public is permitted to comment without being sworn. Unsworn testimony will be given appropriate weight and credibility by the City Commission.

INVOCATION: Any invocation that may be offered at the opening of the Commission meeting shall be the voluntary offering of a private citizen, to and for the benefit of the Commission. The views or beliefs expressed by the invocation speaker have not been previously reviewed or approved by the Commission, and the Commission is not allowed by law to endorse the religious beliefs or views of this, or any other speaker.

CITY OF STUART, FLORIDA
AGENDA ITEM REQUEST
City Commission

Meeting Date: 7/22/2024 **Prepared by:** Peter Kunen

Title of Item:
CITY OF STUART WELLFIELD AND WATER PLANT EVALUATION

Summary Explanation/Background Information on Agenda Request:
The City of Stuart's (City) surficial aquifer supply (SAS) wellfield has served the City well with raw water supply for more than 30 years and is well beyond its useful life. Based on a recent wellfield condition assessment and water supply capacity evaluation, a considerable amount of investment into its replacement and rehabilitation (R&R) is needed to maintain its capacity if it remains the primary source of the City's water supply. With the recent addition and completion of the new Reverse Osmosis (RO) treatment system, a thorough evaluation was conducted into which treatment option, including water supply and treatment type, is recommended to meet and sustain future water system capacity. These include R&R of the SAS wellfield and improvements to the conventional treatment system, or expansion of the recently completed Floridan Aquifer Supply (FAS) well and RO treatment plant.

Funding Source:
TBD

Recommended Action:
Option II is recommended as the most cost-effective solution from a long-term capital and operating expense perspective. It includes drilling additional FAS wells, expanding the RO plant to its buildout capacity of 3.0 MGD, utilizing the already modified deep injection well (IW-2) at the Water Reclamation Facility (WRF) to accept RO concentrate, and replacing SAS wells up to 3.0 MGD which are needed to address emerging contaminant removal and treatment requirements. It is also the optimum ratio of treatment capacities, addressing both the minimum SAS capacity needed to provide remediation of PFAS and Volatile Organic Compounds (VOC) contaminants, while utilizing the maximum practical capacity of the FAS supply and RO treatment system without major upgrades.

ATTACHMENTS:
1. Stuart Wellfield and Water Plant Evaluation_07.15.2024

Stuart Wellfield & Water Plant Evaluation

Presented to the City Commission | July 22, 2024

City of Stuart Public Works
Kimley-Horn and Associates, Inc.

Background/Challenges

- **Aging shallow aquifer ground-water supply system (SAS)**
  - Wells > 50 years old…typical life ~ 30 yrs
  - Scaling, substantial capacity degradation
  - Well casing failures
  - Wellhead deterioration



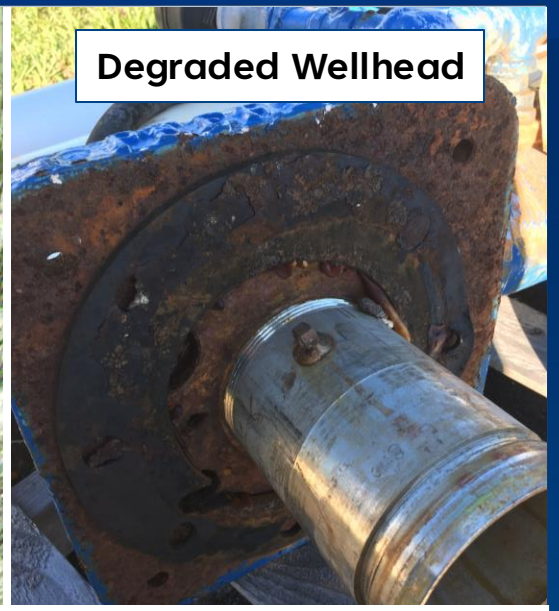



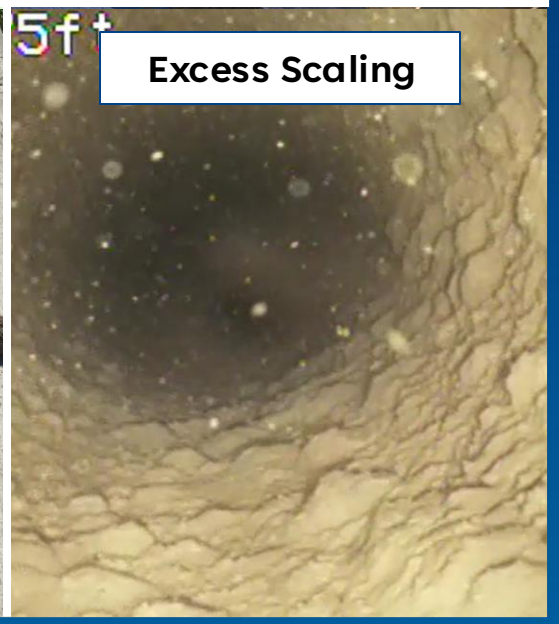

Background/Challenges

- **Emerging contaminants**
  - Influencing operations & increasing costs
  - Requires remediation & continued operation & maintenance
  - Requires reaction to ever-changing & restrictive regulations
- **Reliability on degrading & impacted SAS source**
- **Water quality poor**

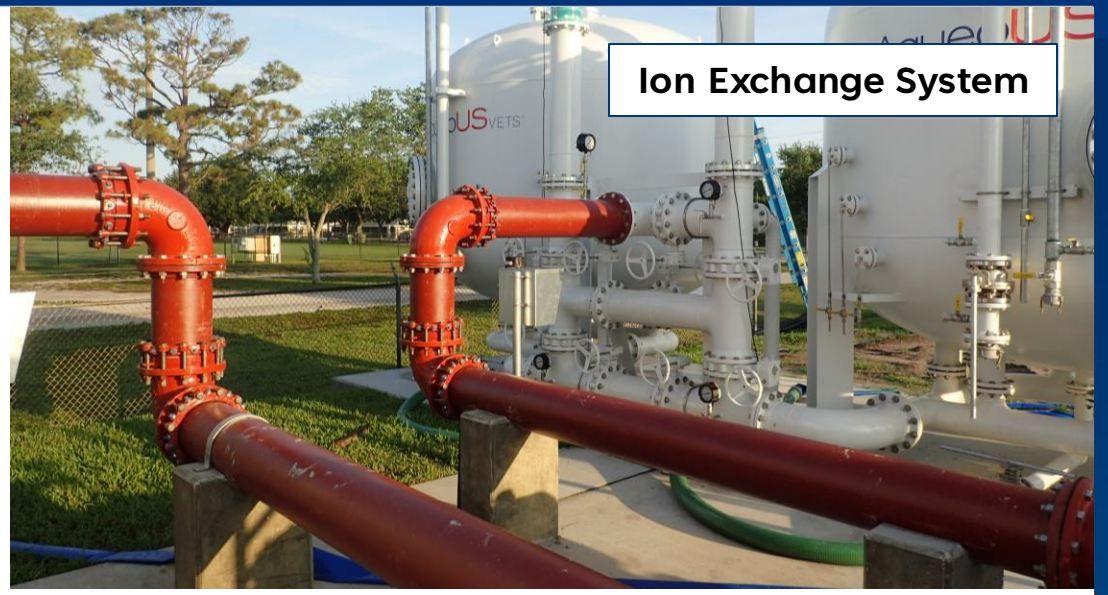
Ion Exchange System


Improved Water Quality

Background

Two distinct groundwater supplies

- **Surficial Aquifer (SAS) – shallow (<200 ft deep)**
  - Limited well capacity, production
  - Drought impacted
  - Elevated organics (color), iron, man-made contaminants
- **Floridan (FAS) – deep (>1,000 ft)**
  - Brackish requires membrane treatment
    - Byproduct disposal via deep injection well
  - Elevated sulfide levels
  - Abundant supply
  - Resilient to droughts
  - Protected from contaminants
  - Reliable source of drinking water



Surficial Well (26)



Floridan Well (FA-1)

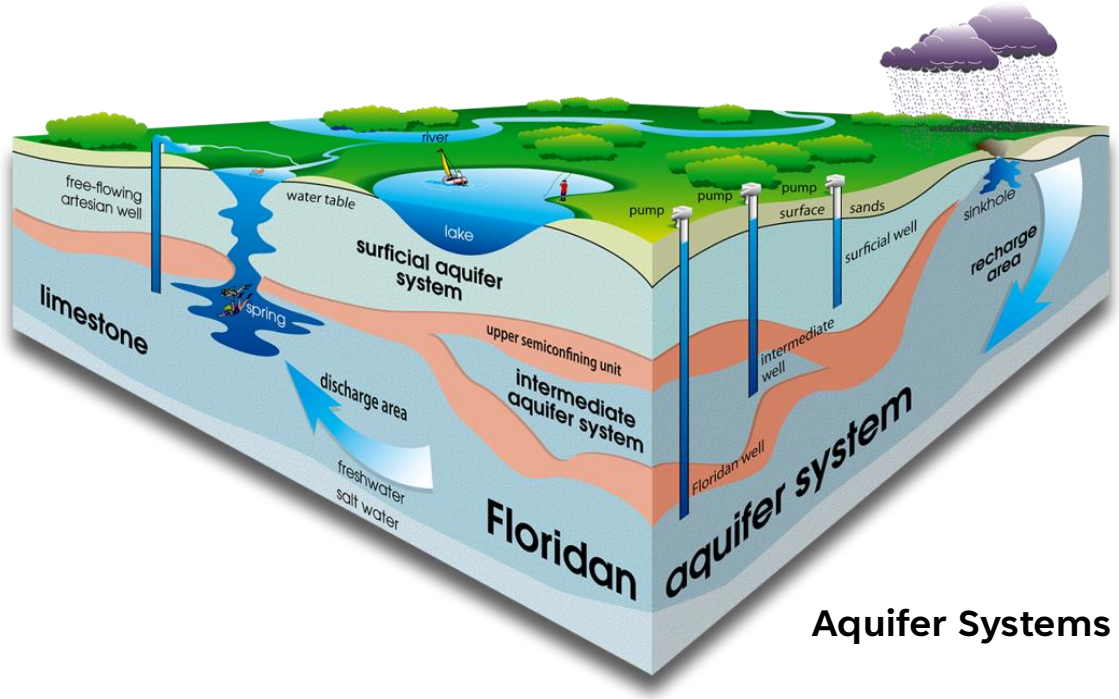

Aquifer Systems

Background

RO plant addition provides a resilient & sustainable water supply

- Recent addition of 1.5 MGD
- Allows for straightforward expansion to 3.0 MGD potable water supply
- State Revolving Fund (SRF) funded
- Reduces stress on SAS wellfield
- Floridan more permittable vs SAS wellfield



Condition Assessment

SAS wellfield improvements

- Replacement
  - 16 of 23 SAS wells
  - Aged wells with holes in casing
  - Low capacity
  - High sand production
- Rehabilation
  - 7 SAS wells
  - Steel cased wells should be considered for replacement long term

Well	Hole Seen In Video (Y/N)	Rehab or Replace	Reason
1	N	Rehab	PVC, regular Rehabilitation & maintenance of well, age, needed for PFAS
2R	N	Rehab	Steel, regular Rehabilitation & maintenance of well
3	N	Replace	Steel, casing condition, age, needed for PFAS
4	Y	Replace	Steel, hole in casing, age
5	N	Replace	Steel, casing condition, age, needed for PFAS
6R (New)	N	Rehab	PVC, Regular Rehabilitation & maintenance of well
7R	N	Replace	PVC, low capacity, sand exceeded 1 ppm, cavitation at higher flows, low capacity
8	Y	Replace	Steel, hole in casing, age
9	Y	Replace	Steel, hole in casing and general casing condition, age, low capacity
11	N	Replace	Steel, casing condition, age, sand exceeded 1 ppm
12	N	Replace	Steel, casing condition, age, low capacity
13	Y	Replace	Steel, hole in casing, age
14	Y	Replace	Steel, hole in casing, age
15	N	Replace	PVC, regular Rehabilitation & maintenance of well, age
22	N	Rehab	Steel, regular Rehabilitation & maintenance of well, age
23	Y	Replace	Steel, hole in casing, age
24	N	Replace	Steel, casing condition, age, needed for PFAS
25	N	Replace	Steel, casing condition, age, needed for PFAS, low capacity
26	N	Replace	High sand production, steel, casing condition, age
27	Y	Replace	Steel, hole in casing, age
28	N	Rehab	Steel, regular Rehabilitation & maintenance of well, age
29	N	Rehab	Steel regular Rehabilitation & maintenance of well, age
30	N	Rehab	Steel, regular Rehabilitation & maintenance of well, age

Condition Assessment and Costs

- **Condition assessment of SAS wellfield (continued)**
  - Capacity limitations

Permitted SAS Flows	Actual Flows with Current Wellfield Condition
7.71 MGD	5.50 MGD

  - Approximate 30% reduction in capacity
  - Replacement and rehabilitation costs

Well Abandonment Costs (each)	Well Costs (each)	Wellhead Costs (each)	General Conditions and Contractor Overhead	Engineering Permitting Administrative	Contingency	Total Well Replacement (with Contingency, (per well)
$10,000	$560,000	$200,000	10% and 15%, respectively	20%	30%	**$1,461,075 (No Over Drill)**
	$780,000	$200,000				**$1,760,880 (Over Drill)**

SAS Wellfield Standardization

- **Standardize SAS Wells**
  - Similar to new Well 6R (Completed in September 2023)
  - PVC casing with SST Wellhead



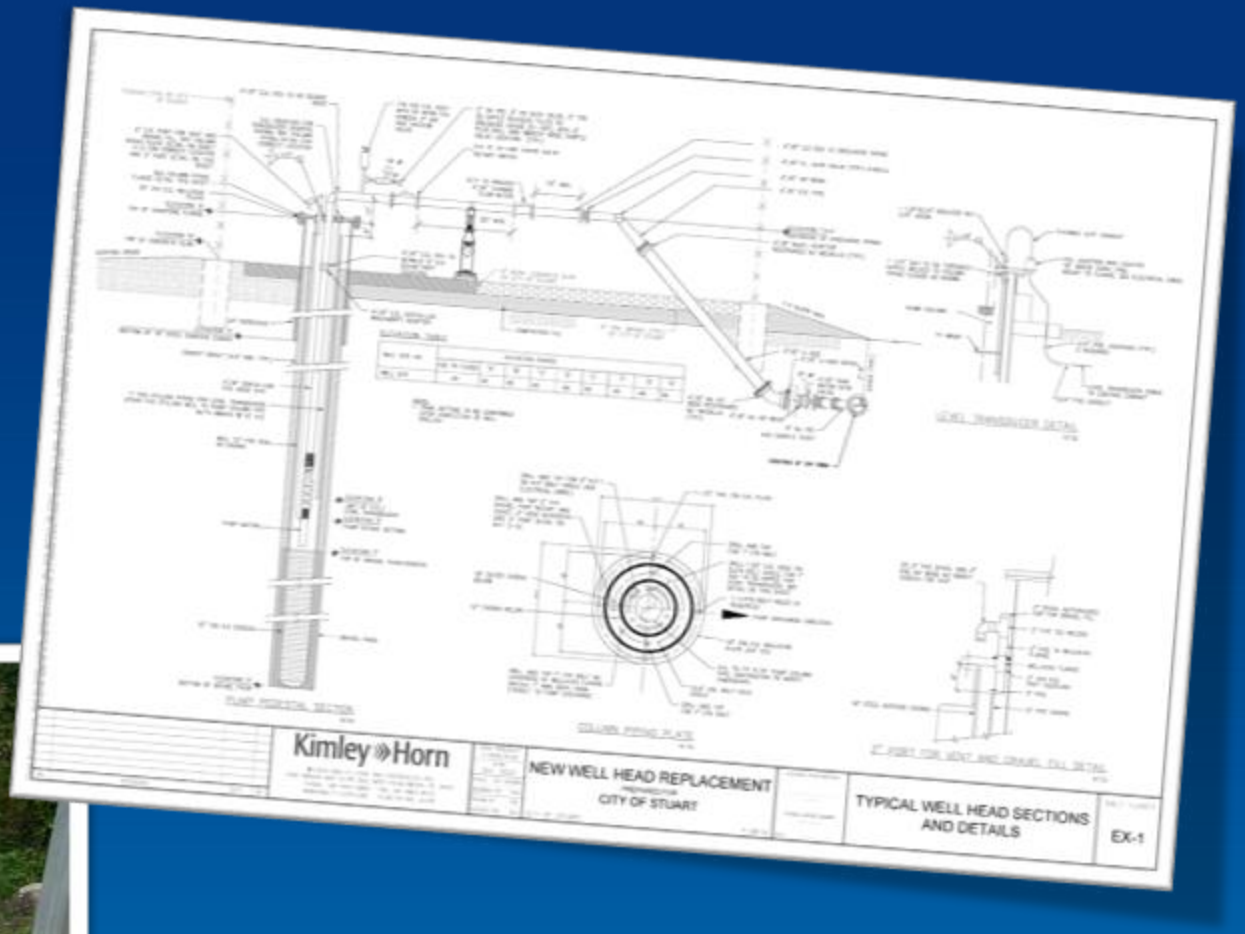

Evaluation

- Condition assessment of SAS wellfield
- Site restrictive – adjacent properties built up around wells
  - Setbacks encroached
- Evaluated impacts on treatment including PFAS & other emerging contaminants
- Initial RO costs known (H&S, 2018)

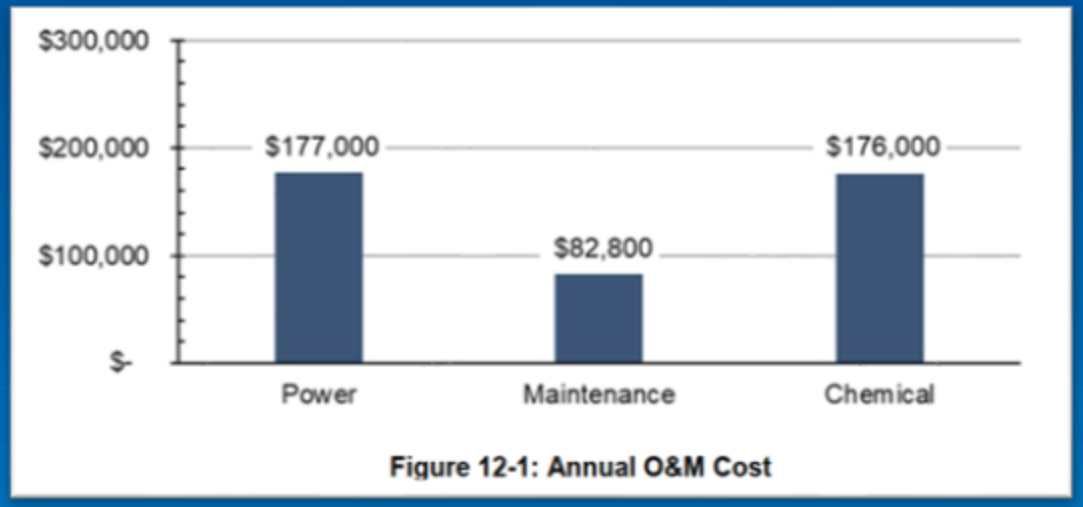

Figure 12-1: Annual O&M Cost



Evaluation and Considerations

- **Continue use of SAS wellfield and rehabilitate entire wellfield**
- **Evaluated different treatment type ratios & costs**
  - Full SAS wellfield replacement vs expand RO beyond original buildout of 3.0 MGD
  - Capital
    - RO Phase I already constructed (1.5 MGD)
    - SAS wellfield replacement costly
  - Operating, rehabilitation and replacement, & maintenance
    - Operating costs for SAS elevated due to recent restrictive regulations
  - Improve finish water quality
- **DBP's, removal of emerging contaminants, lead & copper**
- **Permit modification for additional Floridan wells**

Cost Comparison and Recommendation

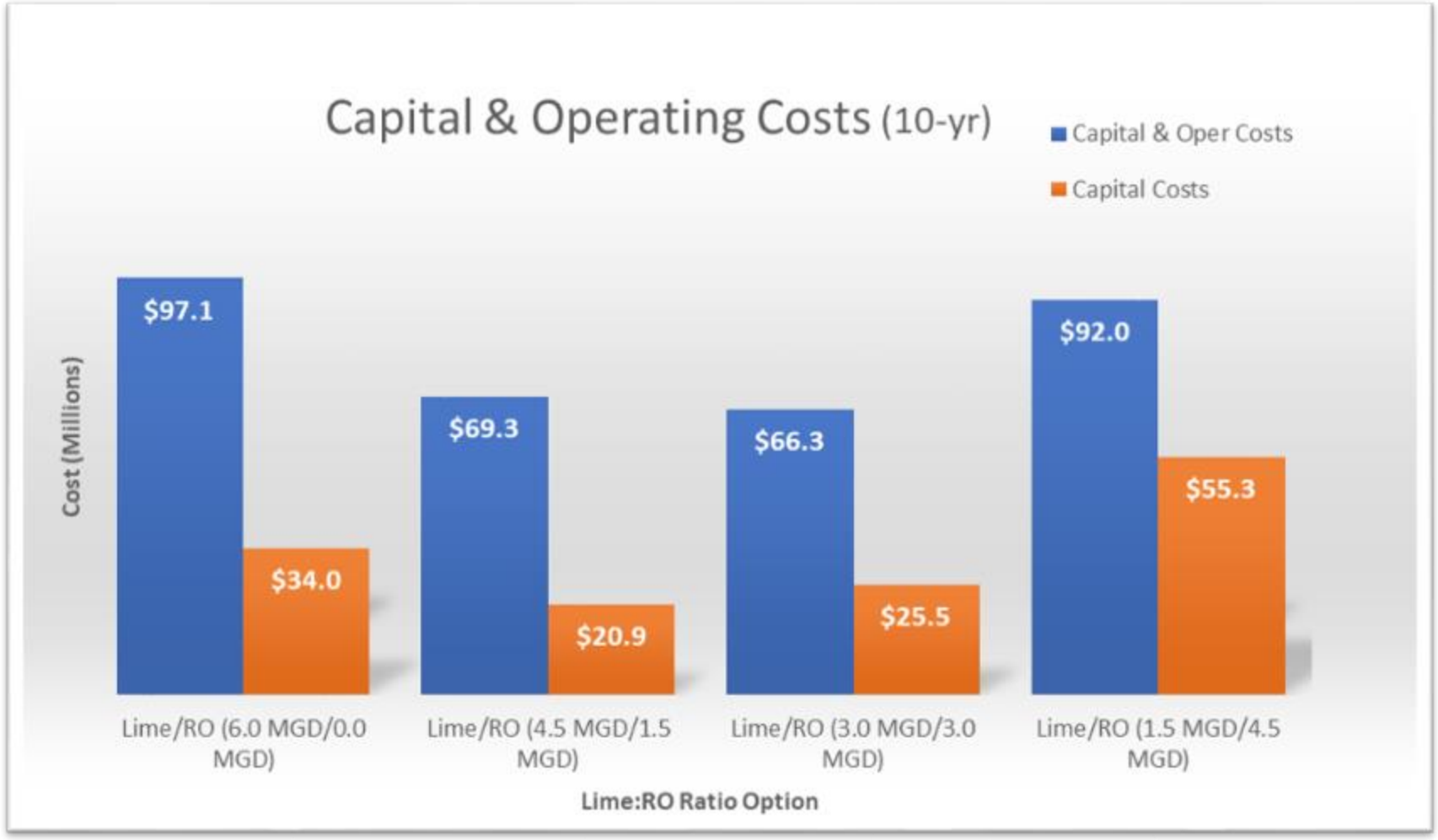

Deep Injection Well (IW-3)= $20,000,000 (additional costs)

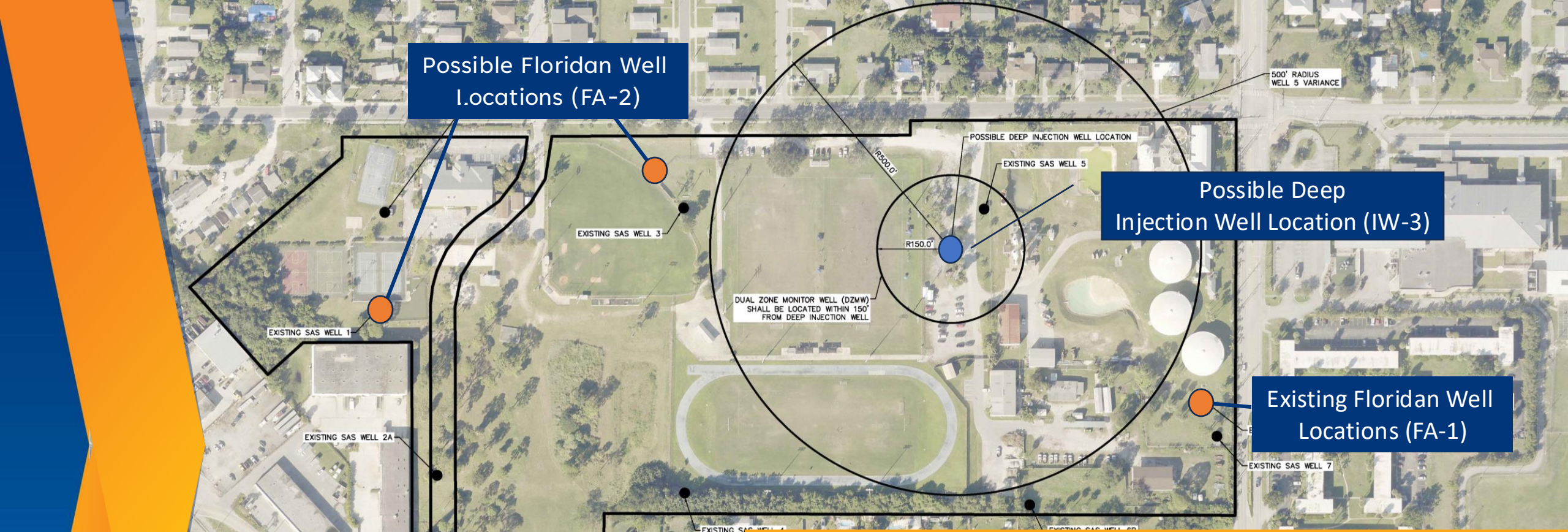

Recommendation

- **Optimum ratio of SAS and FAS capacity (50:50) – Option II**
  - Meet City's long term water supply goals
  - Maintains SAS to address emerging contaminants
  - Utilizes drought resistant sustainable Floridan aquifer
  - Flexibility with alternative water supplies
- **Move forward with RO Plant Expansion to 3.0 MGD**
  - Drill Additional Floridan wells
  - Design RO Plant Expansion

Recommendation

Authorize the following Project components

- Design, permitting, and construction of SAS wellfield replacement and rehabilitation
- Design, permitting, and construction for Reverse Osmosis Plant expansion
- Design, permitting, and construction of additional Floridan Wells
- Consider design, permitting, and construction of DIW and DZMW in the future



CITY OF STUART, FLORIDA
AGENDA ITEM REQUEST
City Commission

Meeting Date: 7/22/2024 **Prepared by:** Nina Mullin

Title of Item:
APPROVAL OF 07/08/2024 SCM MINUTES AND 07/08/2024 CCM MINUTES (RC)

Summary Explanation/Background Information on Agenda Request:
N/A

Funding Source:
N/A

Recommended Action:
Approve Item.

ATTACHMENTS:
1. 07/08/2024 CCM Minutes
2. 07/08/2024 SCM Minutes Budget Workshop #1

MINUTES
REGULAR MEETING OF THE STUART CITY COMMISSION
JULY 8, 2024
AT 4:00 PM
COMMISSION CHAMBERS
121 SW FLAGLER AVE.
STUART, FLORIDA 34994

CITY COMMISSION

Mayor Rebecca S. Bruner
Vice Mayor Campbell Rich
Commissioner Eula R. Clarke
Commissioner Christopher Collins
Commissioner Troy McDonald

ADMINISTRATIVE

City Manager, Michael J. Mortell
City Attorney, Lee J. Baggett
City Clerk, Mary R. Kindel

ROLL CALL

4:37 PM

PRESENT: Mayor Bruner, Vice Mayor Rich, Commissioner Clarke, Commissioner Collins, Commissioner McDonald

INVOCATION

Pastor James Harp, Stuart Alliance Church, gave the Invocation.

PLEDGE OF ALLEGIANCE

1. ARTS MOMENT - "ART AROUND STUART ON SANITATION VEHICLES" BY DON MACINTOSH

Anne Hawkins, U&E Program Manager, presented the "Art Around Stuart on Sanitation Vehicles" by Don Macintosh and introduced Mr. Macintosh.

Mr. Macintosh provided background on himself, why he chose to live in Martin County, and expressed gratitude and happiness that he had been chosen for his artwork to be on our garbage trucks.

PROCLAMATIONS

2. 17TH ANNUAL TREASURE COAST WATERWAY CLEAN UP WEEK, JULY 20 - 28, 2024

Dan Romence, President of Marine Industries Association of the Treasure Coast Manager at Indiantown Marine Center, Caleta Scott, Indian River Lagoon Council, and Mimi Adkins, Site Leader at Indian River Drive Boat Ramp, accepted the Proclamation. Mr. Romence thanked the Commission and the City for supporting the clean-up and provided statistics of previous clean-ups.

3. PARKS & RECREATION MONTH - JULY 2024

Jim Chrulski, Community Services Director, and Milton Leggett, Public Works Director, accepted the Proclamation. Mr. Chrulski thanked the Commission for their support and invited the Parks and Recreation team in the acceptance.

4. MARTIN READS - JULY 2024

Kiana Kelly, Martin Reads Coordinator of the Children's Services Council, accepted the Proclamation and spoke about the event, Reverse Visioning, and the importance of literacy.

PRESENTATIONS

5. SERVICE AWARDS - JULY 2024

Marvin Dyall	Water Treatment Department	25 years (Not Present)
Sean Eichling	Fire Rescue	15 years (Not Present)
Christopher LaBarbera	Fire Rescue	15 years
Nicholas Steffen	Fire Rescue	15 years
Christopher Watson	Fire Rescue	15 years
Edward Tanner	Vehicle Maintenance Department	5 years
Joshua Cruz	Police Department	5 years
Jeffery Hughes	10th Street Center	5 years
Ostyn Levi	Fire Rescue	5 years

6. CITY'S EMPLOYEE WELLNESS PROGRAM AND RECENT AWARDS

Roz Johnson Strong, Human Resource Director, presented the City's Wellness Program and recognized the wellness ambassadors with a Certificate of Appreciation.

7. POPPLETON CREEK LAKE RESTORATION

Milton Leggett, Public Works Director, introduced Dr. Joseph Gilio, President of Lake Okeechobee Restoration Initiative, presented the experiments and findings performed on Poppleton Creek Pond.

Commissioner McDonald thanked Dr. Gilio for his work and his recommendations. He asked Dr. Gilio if the planted grass stays low enough so that it is not in the way of sail boats. Dr. Gilio confirmed it stays low.

Mr. Leggett stated that he is working with a secondary company called Solar Tube Lake Management and will have a recommendation from them as well.

Michael Mortell, City Manager, explained that this was dry land in 2007 and the City of Stuart with the Florida Department of Environmental Protection (DEP) built a major stormwater retention area designed to capture the runoff of fertilizer and other matters before entering into the river. The issue now is a way to maintain the weeds.

Commissioners discussed creating a healthier eco-system the different grasses, an upcoming Indian River Task Force Meeting, and the opportunity to beautify the areas.

COMMENTS BY CITY COMMISSIONERS

Commissioner Clarke

- Commented that July is Recreation Month and thanked the recreation team and Mr. Chrulski for the successful Fire and Ice 4th of July event, as well as working with the Boys and Girls Club.
- Expressed appreciation for Pinal Gandhi-Savdas, Community Redevelopment Agency (CRA) Director, for working hard with the East Stuart Historical Advisory Committee.
- Commended Michael Mortell, City Manager, and Roz Strong, Human Resource Director for all their hard work.

Vice Mayor Rich

- Commended the Commissioners on the requirements they made for the Farrell Creek development.

Commissioner McDonald

- Commented on the successful 4th of July event and thanked Mr. Chrulski.
- Commented on the fatalities from accidents throughout the City and reminded all to be safe.

Mayor Bruner

- Commented that she was on a ride along in a City of Stuart canine vehicle and shared her discussion with the officer regarding the safety with the 4th of July holiday.
- Reported that the Golf Cart Parade on the 4th of July was a success.

COMMENTS BY CITY MANAGER

City Manager Michael Mortell

- Informed the Commissioners on what a Moonshot moment is.
- Commented on the season premiere of a Snapped Episode that featured Michael Gerwan from the City of Stuart Police Department.
- Thanked Community Services, Police, and Fire Departments on the job well done for the 4th of July event.
- Announced the Treasure Coast Waterway Clean Up coordinated by Anne Hawkins on July 27, 2024 at 8 AM.
- Complimented the Fire Department on the response to the 117 year old historic home that caught on fire and the firefighters being able to salvage 2 full rooms.
- Commented on the tragic accident that happened on Roosevelt Bridge.

APPROVAL OF AGENDA

6:24 PM MOTION: Approve.
MOVED BY: Troy McDonald
SECONDED BY: Campbell Rich
Motion approved unanimously.

COMMENTS FROM THE PUBLIC (Non-Agenda Related) (3 Minutes Max.)

1. Barbara Grass - Stuart; Thanked the Commission for listening to the Citizens' concerns and fixing the sidewalk on Central Parkway.
2. Walter Lloyd - Stuart; Stated election signs are being removed from private and public property and being thrown away. He feels all candidates should have a fair shot at campaigning.

City Manager Mortell stated he was the one that provided the direction on election signs.

CONSENT CALENDAR

8. APPROVAL OF 06/24/2024 CCM MINUTES (RC)

9. AUTHORIZING APPLICATION FOR ADDITIONAL ID THEFT & FRAUD PREVENTION GRANT FUNDING (RC):

RESOLUTION No. 60-2024; A RESOLUTION OF THE CITY COMMISSION OF THE CITY OF STUART, FLORIDA, AUTHORIZING A FLORIDA DEPARTMENT OF LAW ENFORCEMENT OFFICE OF CRIMINAL JUSTICE GRANT APPLICATION FOR ADDITIONAL FUNDS TOWARDS IDENTITY THEFT AND FRAUD PREVENTION; AND AUTHORIZING EXECUTION OF A GRANT AGREEMENT IF AWARDED; AND FURTHER AUTHORIZING ANY MINOR AMENDMENTS TO THE GRANT AGREEMENT TO FACILITATE THE PROGRAM AS APPROPRIATE; PROVIDING AN EFFECTIVE DATE, AND FOR OTHER PURPOSES.

10. BUDGET AMENDMENT #13 ACCEPTING DONATIONS TOWARDS 4TH OF JULY EVENT ACTIVITIES (RC):

RESOLUTION No. 63-2024; A RESOLUTION OF THE CITY COMMISSION OF THE CITY OF STUART AUTHORIZING BUDGET AMENDMENT NO. 13 TO THE FISCAL YEAR 2023-2024 OPERATING BUDGET; ACCEPTING SPONSORSHIP DONATIONS FROM THREE GENEROUS COMPANIES FOR FOURTH OF JULY SPECIAL EVENT ACTIVITIES PRODUCED BY THE CITY; PROVIDING AN EFFECTIVE DATE; AND FOR OTHER PURPOSES.

11. REQUESTING LETTER OF SUPPORT TO MARTIN COUNTY HUMAN SERVICES FOR JAG GRANT (RC):

RESOLUTION No. 64-2024; A RESOLUTION OF THE CITY COMMISSION OF THE CITY OF STUART, FLORIDA AUTHORIZING A LETTER OF SUPPORT TO MARTIN COUNTY HUMAN SERVICES FOR THE SUBMISSION OF AN APPLICATION FOR THE EDWARD BYRNE MEMORIAL JUSTICE ASSISTANCE GRANT PROGRAM FOR MENTAL HEALTH COURT; PROVIDING AN EFFECTIVE DATE; AND FOR OTHER PURPOSES.

12. SAILFISH CAY REPLAT (TOWNE PARK) (RC):

RESOLUTION No. 65-2024; A RESOLUTION OF THE CITY COMMISSION OF THE CITY OF STUART, FLORIDA, REPEALING RESOLUTION 39-2024 AND APPROVING A PLAT TITLED "REPLAT NO. 1 OF TOWNE PARK", BEING A REPLAT OF TOWNE PARK, ACCORDING TO THE PLAT THEREOF AS RECORDED IN PLAT BOOK 11, PAGE 85, PUBLIC RECORDS OF MARTIN COUNTY, FLORIDA, ALL LYING AND BEING IN SECTION 9, TOWNSHIP 38 SOUTH, RANGE 41 EAST, CITY OF STUART, MARTIN COUNTY, FLORIDA, CONTAINING 4.88 ACRES, MORE OR LESS PREPARED BY MICHAEL T. OWEN OF ENGINEERING DESIGN & CONSTRUCTION, INC, AND MAPPER NO. 5556 FOR SAILFISH CAY RPUD; PROVIDING AN EFFECTIVE DATE; AND FOR OTHER PURPOSES.

END OF CONSENT CALENDAR

6:31 PM MOTION: Approve.
MOVED BY: Eula Clarke
SECONDED BY: Troy McDonald
Motion approved unanimously.

COMMISSION ACTION

13. AWARD OF ITB #2024-105: RIVERSIDE PARK NEIGHBORHOOD-OLEANDER PARK IMPROVEMENTS (RC):

RESOLUTION No. 61-2024; A RESOLUTION OF THE CITY COMMISSION OF THE CITY OF STUART, FLORIDA, APPROVING THE AWARD OF ITB #2024- 105, RIVERSIDE PARK NEIGHBORHOOD-OLEANDER PARK IMPROVEMENTS TO THE LOWEST, MOST RESPONSIVE AND RESPONSIBLE BIDDER WITH A TOTAL UNIT PRICE OF $83,127.16 TO BRIGHTVIEW LANDSCAPE SERVICES, INC. OF VERO BEACH, FLORIDA; PROVIDING AN EFFECTIVE DATE; AND FOR OTHER PURPOSES.

Ms. Gandhi-Savdas presented the Oleander Park Improvements location, landscape plans, action plan, and new development surrounding the location.

Commissioner McDonald stated he loves pocket parks and thinks this is a great idea.

6:36 PM MOTION: Approve.
MOVED BY: Troy McDonald
SECONDED BY: Eula Clarke
Motion approved unanimously.

DISCUSSION AND DELIBERATION

ADJOURNMENT

6:37 PM

Mary R. Kindel, City Clerk **Rebecca S. Bruner, Mayor**

Minutes to be approved at the Regular Commission Meeting this 22nd day of July, 2024.

MINUTES
SPECIAL COMMISSION MEETING – BUDGET WORKSHOP #1
OF THE STUART CITY COMMISSION
JULY 8, 2024
AT 3:30 PM
COMMISSION CHAMBERS
121 SW FLAGLER AVE.
STUART, FLORIDA 34994

CITY COMMISSION

Mayor Rebecca S. Bruner
Vice Mayor Campbell Rich
Commissioner Eula R. Clarke
Commissioner Christopher Collins
Commissioner Troy McDonald

ADMINISTRATIVE

City Manager, Michael J. Mortell
City Attorney, Lee J. Baggett
City Clerk, Mary R. Kindel

ROLL CALL

3:32 PM

PRESENT: Mayor Bruner, Vice Mayor Rich, Commissioner Clarke, Commissioner Collins, Commissioner McDonald

PLEDGE OF ALLEGIANCE

COMMENTS BY CITY COMMISSIONERS

None.

COMMENTS BY CITY MANAGER

None.

APPROVAL OF AGENDA

3:33 PM MOTION: Approve.
MOVED BY: Eula Clarke
SECONDED BY: Campbell Rich
Motion approved unanimously.

COMMENTS FROM THE PUBLIC (Non-Agenda Related) (3 Minutes Max.)

None.

DISCUSSION AND DELIBERATION

1. FISCAL YEAR 2025 BUDGET WORKSHOP 1

Michael Mortell, City Manager, provided a brief description of the current status of the FY2025 budget.

Louis "Joly" Boglioli, Finance Director, presented on ad valorem, taxable values, millage, budget and percent change over the years, and the CRA value. In addition, he reviewed budget factors, revenue, insurance rates, health and FRS increases, as well as new positions in Police and Fire.

Commissioners participated in questions and answers with Mr. Boglioli.

City Manager Mortell stated the plan for the upcoming budget, the workshops, and a "not to exceed" millage rate.

Commissioners agreed to select the millage rate at the next Commission meeting.

ADJOURNMENT

4:28 PM

Mary R. Kindel, City Clerk **Rebecca S. Bruner, Mayor**

Minutes to be approved at the Regular Commission Meeting this 22nd day of July, 2024.

CITY OF STUART, FLORIDA
AGENDA ITEM REQUEST
City Commission

Meeting Date: 7/22/2024 **Prepared by:** Alaina Knofla

Title of Item:
AWARD OF ITB# 2024-106: WATER RECLAMATION FACILITY HEADWORKS REHAB-PHASE 1 (RC):

RESOLUTION No. 67-2024; A RESOLUTION OF THE CITY COMMISSION OF THE CITY OF STUART, FLORIDA APPROVING THE AWARD OF ITB #2024-106, CITY OF STUART WATER RECLAMATION FACILITY HEADWORKS REHAB-PHASE 1 S TO THE LOWEST, MOST RESPONSIVE AND RESPONSIBLE BIDDER WITH A TOTAL UNIT PRICE OF $1,497,250.00 TO RAZORBACK LLC. OF TARPON, FLORIDA; PROVIDING AN EFFECTIVE DATE; AND FOR OTHER PURPOSES.

Summary Explanation/Background Information on Agenda Request:
This solicitation was advertised in the Palm Beach Post on May 10, 2024, and released concurrently by OpenGov Procurement and Demandstar, who simultaneously notified two thousand two hundred seventy-three (2,273) potential bidders. There were fifty-five (55) plan holders, and one (1) issued bid packages for this project. Two (2) bids were received by the bid opening date/time of June 12, 2024/2:30 pm. The work will consist of installation of a temporary headworks bypass system, removal of the second-floor enclosed roof structure, detailed structural condition assessment and minor repairs to influent channels and gates, installation of a new steel canopy, modifications of the existing odor control system, and associated electrical improvements.

The Engineer of Record Carollo reviewed references and recommended awarding to the lowest responsive, responsible bidder, for the total of $1,497,250.00

Funding Source:
410-56562-620

Recommended Action:
Adopt Resolution No. 67-2024

ATTACHMENTS:
1. R67-2024_Award ITB 2024-106-Rev
2. R67-2024 Contract

BEFORE THE CITY COMMISSION
CITY OF STUART, FLORIDA

RESOLUTION 67-2024

A RESOLUTION OF THE CITY COMMISSION OF THE CITY OF STUART, FLORIDA APPROVING THE AWARD OF ITB #2024-106, CITY OF STUART WATER RECLAMATION FACILITY HEADWORKS REHAB-PHASE 1 TO THE LOWEST, MOST RESPONSIVE AND RESPONSIBLE BIDDER WITH A TOTAL UNIT PRICE OF $1,497,250.00 TO RAZORBACK, LLC OF TRAPON SPRINGS, FLORIDA; PROVIDING AN EFFECTIVE DATE; AND FOR OTHER PURPOSES.

* * * * *

WHEREAS, the City entered into the competitive Invitation to Bid process in order to solicit qualified contractors to submit bids to construct the rehabilitation of the City of Stuart Reclamation Facility Headworks structure; and

WHEREAS, the work will consist of installation of a temporary headworks bypass system, removal of the second-floor enclosed roof structure, detailed structural condition assessment and minor repairs to influent channels and gates, installation of a new steel canopy, modifications of the existing odor control system, and associated electrical improvements; and

WHEREAS, Razorback, LLC of Tarpon Springs, Florida, was the lowest, most responsive and responsible bidder to the City's Invitation to Bid.

NOW THEREFORE, BE IT RESOLVED BY THE CITY COMMISSION OF THE CITY OF STUART, FLORIDA that:

SECTION 1: The City Commission of the City of Stuart hereby approves the award of ITB #2024-106: City of Stuart Water Reclamation Facility Headworks Rehab-Phase 1 with

Resolution No. 67-2024
Approve Award of ITB #2024-106: City of Stuart Water Reclamation Facility Headworks Rehab-Phase 1
authorization to execute final contract subsequent to review and approval by the City Attorney.

SECTION 2: This resolution shall take effect upon adoption.

Commissioner _____ offered the foregoing resolution and moved its adoption. The motion was seconded by Commissioner _____ and upon being put to a roll call vote, the vote was as follows:

	YES	NO	ABSENT	ABSTAIN
REBECCA S. BRUNER, MAYOR				
CAMPBELL RICH, VICE MAYOR				
EULA R. CLARKE, COMMISSIONER				
CHRISTOPHER COLLINS, COMMISSIONER				
TROY MCDONALD, COMMISSIONER				

ADOPTED this 22nd day of July, 2024.

ATTEST:

_____
MARY R. KINDEL
CITY CLERK

_____
REBECCA S. BRUNER
MAYOR

APPROVED AS TO FORM
AND CORRECTNESS:

_____
LEE J. BAGGETT, ESQ
CITY ATTORNEY

"CONTRACT"

CONTRACTOR: **Razorback LLC**
177 Anclote Road
Tarpon Springs, Florida 34689

PROJECT: **ITB 2024-106: City of Stuart Water Reclamation Facility Headworks Rehab- Phase 1**

THIS UNIT PRICE CONTRACT, hereinafter "Contract," made and entered into the _____ day of _____, 2024 by and between **Razorback LLC.** (hereinafter referred to as "Contractor") and the City of Stuart, Florida, a municipal corporation, 121 SW Flagler Avenue, Stuart, Florida 34994 (hereinafter referred to as "City"), for and in consideration of the following terms, conditions and covenants.

RECITALS

WHEREAS, Contractor is a licensed corporation doing business in Florida which provides general construction services; and

WHEREAS, City desires to hire Contractor to provide Headworks Rehabilitation at the Water Reclamation Facility for the City; and

WHEREAS, Contractor is willing and able to provide Headworks Rehabilitation for the City on the terms and conditions set forth herein; and

WHEREAS, City desires to enter into this Contract with Contractor to perform the services specified herein and, in an amount set forth herein.

NOW THEREFORE, in consideration of the promises and the mutual covenants set forth herein, the parties agree as follows:

The Recitals set forth above are hereby incorporated into this Contract and made a part hereof for reference.

I. SCOPE OF SERVICES

The Contract Work consists of rehabilitation of the City of Stuart Water Reclamation Facility headworks structure, including installation of a temporary headworks bypass system, removal of the second-floor enclosed roof structure, detailed structural condition assessment and minor repair to influent channels and gates, installation of a new steel canopy, modifications to the existing odor control system, and associated electrical improvements.

II. CONTRACT PROVISIONS

Section 1. Period of Services

Time of Performance

Upon award of this Contract by Resolution of the City of Stuart Board of Commissioners or upon emergency approval by the City Manager, the effective date of this Contract shall be date of execution of this Contract by both City and Contractor. The Contractor shall begin work within ten (10) calendar days after delivery of written Notice to Proceed (hereinafter "NTP") issued by the Project Manager for the City to the Project Manager for the Contractor. All performance of the Contract Work shall be completed within **sixty (60) calendar days** of the date of issuance of the NTP. Commencement of the Contract Work by the Contractor prior to the NTP shall be deemed a waiver of the issuance of the NTP and shall constitute the "Date of Commencement" for purposes of the completion deadline.

Section 2. Compensation and Method of Payment

2.1 Fee Schedule

City will compensate Contractor for the Contract Work in accordance with Contractor's pricing schedule formalized in "Price Proposal Form" submitted by Contractor which is attached hereto as Exhibit "A." The compensation to the Contractor under this Contract shall **not exceed $1,497,250.00.**

2.2 Payment

Payment for services rendered is due within thirty (30) days of receipt and approval of invoice by City. Payment is delinquent thirty (30) days following receipt and approval of invoice by City.

Section 3. Guarantee

The Contractor guarantees to repair, replace or otherwise make good to the satisfaction of the City any damage caused during the work agreed to under this Contract. Contractor further guarantees the successful performance of the work for the service intended. If the City deems it inexpedient to require the Contractor to correct deficient or defective materials or labor, an equitable deduction from the Contract price shall be made therefore, or in the alternative, the City may sue for damages, or both.

Section 4. Audit

The Contractor agrees that the City or any of its duly authorized representatives shall, until the expiration of three (3) years after expenditure of funds under this Contract, have access to and the right to examine any directly pertinent books, documents, papers, and records of the Contractor involving transactions related to this Contract. The Contractor agrees that any payment(s) made under this Contract shall be subject to reduction for amounts charged thereto which are found on the basis of audit examination not to constitute allowable costs under this Contract. Upon notice from the City, the Contractor shall refund by check payable within thirty (30) days to the City the amount of such reduction of payments. All required records shall be maintained until an audit is completed and all questions arising therefrom are resolved, or three years after completion of the project, whichever is sooner.

Section 5. Contractor Responsibility

5.1 Independent Contractor

The Contractor is an independent contractor and is not an employee or agent of the City. Nothing in this Contract shall be interpreted to establish any relationship other than that of an independent contractor, between the City and the Contractor, its employees, agents, subcontractors, or assigns, during or after the performance of this Contract.

5.2 Responsibility for Work

The Contractor shall take the whole responsibility of the Contract Work under this Contract and shall bear all losses resulting to Contractor because of bad weather, or because of errors or omissions in Contractor's bid on the Contract price, or except as otherwise provided in the Contract Documents because of any other causes whatsoever.

5.3 Contractor's Records

As a condition precedent to Contractor filing any claim against City, Contractor shall make available to City all of Contractor's books and records (directly or indirectly related to the claim of Contractor's business) requested by City. Refusal to do so shall constitute a material breach of this Contract.

Section 6. Termination

6.1 Termination for Convenience

Either party upon thirty (30) days written notice to the other party may terminate this Contract. In the event of termination, Contractor shall be paid for all services rendered to the date of termination, including all authorized reimbursable expenses. Upon delivery of said notice, the Contractor shall discontinue all services in connection with the performance of this Contract and shall proceed to cancel promptly all related existing third-party contracts.

6.2 Termination for Cause

If the Contractor should be adjudged bankrupt, or if Contractor should make a general assignment for the benefit of Contractor's creditors, or if a receiver should be appointed on account of Contractor's insolvency, or if Contractor should fail to provide properly skilled personnel or proper service in the sole discretion of the City, then the City can, after giving the Contractor thirty (30) days written notice, and without prejudice to any other right or remedy, terminate this Contract. Upon such termination, the City may take over the work and prosecute the same to completion, by Contract or otherwise, and the Contractor and its sureties shall be liable to the City for any additional cost incurred by the City in its completion of the work.

6.3 Excusable Delays

The right of the Contractor to proceed shall not be terminated nor shall the Contractor be charged with liquidated damages for any delays in the completion of the work or delivery of the materials due to: (1) any acts of the federal government, including controls or restrictions or requisitioning of materials, equipment, tools or labor by reason of war, national defense or any other national emergency; (2) any adverse acts of the City; (3) causes not reasonably foreseeable by the parties at the time of execution of the Contract that are beyond the control and without the fault or negligence of the Contractor, including but not restricted to, acts of God, acts of public enemy, fires, floods, tornadoes, hurricanes, and other extreme weather conditions; and (4) any delay of any Subcontractor due to any of the above-mentioned causes. However, the Contractor must promptly notify the City in writing within two days of official notice of scheduled delivery or scheduled work of the cause of delay. If, on

the basis of the facts and terms of this Contract, the delay is properly excusable, the City shall extend the time for completing the work for a period of time commensurate with the period of excusable delay.

Section 7. Notice

7.1 Whenever either party desires to give notice to the other, such notice must be in writing in at least one for the following methods: (a) Overnight courier, such as FedEx or UPS, with a request for receipt acknowledgment; or (b) Email addresses listed here within this section, and any subsequent email address provided by either party for purposes of notice under this Contract.

Notice for City:
City of Stuart
121 SW Flagler Avenue
Stuart, FL 34994
ATTN: City Manager
Email: mmortell@ci.stuart.fl.us & cityclerk@ci.stuart.fl.us

Notice for Contractor:
Razorback LLC
ATTN: Anthony Houllis
177 Anclote Road
Tarpon Springs, Florida 34689
Email: Anthony@razorbackllc.com

7.2 Project Manager

The Project Manager for the City with the authority to act on the City's behalf with respect to all aspects of the Project is Utilities and Engineering Project Manager, Marc Rogolino, City of Stuart, 121 SW Flagler Avenue, Stuart, Fl 34994 Telephone: 772-221-4700 Email: mrogonlino@ci.stuart.fl.us

The Project Manager for the Contractor with authority to act on the Contractor's behalf with respect to all aspects of the Project is identified hereinabove in Section 7.1.

Section 8. Persons Bound by Contract

8.1 Parties to the Contract

The persons bound by this Contract are the Contractor and the City and their respective partners, successors, heirs, executors, administrators, assigns and other legal representatives.

8.2 Assignment of Interest in Contract

This Contract and any interest or services associated with this Contract may not be assigned, sublet or transferred to another by either party without the prior written consent of the other party. Nothing contained herein shall be construed to prevent Contractor from employing such independent third-party contractors, associates and subcontractors as Contractor may deem appropriate to assist in the performance of the services hereunder.

8.3 Other Entity Use

The successful Contractor may be requested to convey its proposal prices, contract terms and conditions, to municipalities or other governmental agencies within the State of Florida.

8.4 Inspection

The project will be inspected by the Project Manager for the City and will be rejected if it is not to conformity with the Contract provisions. Rejected work will be immediately corrected by the Contractor. When the Contract Work is substantially completed, the Contractor shall notify the City in writing that the Contract Work shall be ready for inspection on a definite date, at least two (2) calendar days thereafter, which shall be stated in such notice.

8.5 Rights and Benefits

Nothing herein shall be construed to give any rights or benefits arising from this Contract to anyone other than Contractor and the City.

Section 9. Indemnification of City

Contractor assumes the entire responsibility and liability for all damages or injury to all persons, and to all property, caused by the Contractor or Contractor's employees, agents, consultants or sub-contractors, and Contractor shall to the fullest extent allowed by law, indemnify, defend and hold harmless the CITY, and its officers and employees, from liabilities, damages, losses, and costs, including, but not limited to, reasonable attorneys' fees (incurred in the defense and any attorneys' fees awarded to opposing party), to the extent caused by the negligence, omission, or intentional conduct of the Contractor and other persons employed or utilized by the Contractor in the performance of the Contract.

Section 10. Insurance.

10.1. Requirements

Contractor shall procure and maintain insurance, in the amounts noted in 1.8 of the Invitation to Bid which is attached hereto as Exhibit "B." Such certificate of insurance must contain a provision for notification to the City thirty (30) days in advance of any material change or cancellation. The City, by and through its Risk Manager, reserves the right to review, modify, reject or accept any required policies of insurance, including limits coverages or endorsements, herein from time to time throughout the term of this contract. All insurance carriers must have an A.M. Best Rating of at least A:VII or better. When a self-insured retention or deductible exceeds $5,000, the City reserves the right, but not the obligation, to review and request a copy of Contractor's most recent annual report or audited financial statement. All third-party contractors, including any independent contractors and subcontractors utilized by Contract in providing services required herein, must comply with the insurance requirements. The Contractor shall be responsible for ensuring that all independent contractors and/or subcontractors comply with the same insurance requirements referenced above. The failure on the part of the Contractor to execute the Contract and/or punctually deliver the required Insurance Certificates, bond, and other documentation may be the cause for the annulment of the award.

10.2 Certificate of Insurance

Certificates of all insurance required from the Contractor shall be attached to this agreement and shall be subject to the City's approval for adequacy.

10.3 Payment and Performance Bonds

The Contractor shall furnish an acceptable recorded Performance and Payment Bond complying with the statutory requirements set forth in Florida Statutes § 255.05 in the amount of 100% of the Contract price. A fully authorized Surety, licensed by the State of Florida, shall execute the Performance and Payment Bond. The

Performance and Payment Bond shall remain in full force and effect a minimum of one (1) year after the work has been completed and final acceptance of the work is issued by the City. Should the Surety become irresponsible during the time the Contract is in force, the City may require additional sufficient sureties and the Contractor shall furnish same to the satisfaction of the City within ten (10) days after written notice to do so. In default thereof, the Contract may be suspended as herein provided.

Section 11. Professional Standards

All Contract Work performed by Contractor will be in accordance with the highest professional standards and in accordance with all applicable governmental regulations.

Section 12. Non-Appropriation

This Contract is deemed effective only to the extent of the annual appropriations available. The Contractor acknowledges that the City's performance and obligation to pay under this Contract is contingent upon an annual appropriation by the City Commission. The Contractor agrees that, in the event such an appropriation is not forthcoming, the City may terminate this Contract and that no charges, penalties or other costs shall be assessed.

Section 13. General Conditions

13.1 Venue in Martin County

Jurisdiction and venue for any lawsuit to enforce the terms and obligations of this Contract shall lie exclusively in the County Court or the Circuit Court in and for Martin County, Florida.

13.2 Laws of Florida

The validity, interpretation, construction, and effect of this Contract shall be in accordance with and governed by the laws of the State of Florida.

13.3 Attorney's Fees and Costs

In the event the Contractor breaches or defaults in the performance of any of the terms, covenants and conditions of this Contract, the Contractor agrees to pay all damages and costs incurred by the City in the enforcement of this Contract, including reasonable attorney's fees, court costs and all expenses, even if not taxable as court costs, including, without limitation, all such fees, costs and expenses incident to appeals incurred in such action or proceeding.

13.4 Mediation as Condition Precedent to Litigation

Prior to the initiation of any litigation by the parties concerning this Contract, and as a condition precedent to initiating any litigation, the parties agree to first seek resolution of the dispute through non-binding mediation. Mediation shall be initiated by any party by serving a written request for the same on the other party. The parties shall, by mutual agreement, select a mediator within fifteen (15) days of the date of the request for mediation. If the parties cannot agree on the selection of a mediator, then the City shall select the mediator who, if selected solely by the City, shall be a mediator certified by the Supreme Court of Florida. The mediator's fee shall be paid in equal shares by each party to the mediation. The mediation shall take place within a reasonable period of time of the request by either party.

13.5 Contract Amendment

The City reserves the right to delete, add or revise locations under this proposal at any time during the Contract term when and where deemed necessary. If any locations are added or deleted from the Contract, the rate quoted shall be used to determine the adjusted Contract price.

No modification, amendment or alteration in the terms or conditions contained in this Contract shall be effective unless contained in a written document executed with the same formality and of equal dignity herewith. This Contract constitutes the entire agreement between the parties, and no prior, or contemporaneous oral agreement shall be binding on either party. If either party fails to enforce a portion or all of this Contract, it shall not constitute a waiver of the same.

13.6 Contractual Authority

By signing this Contract, the Contractor swears or affirms, under penalty of perjury, that this is a valid act of the Contractor, and that no later claim shall be made by the Contractor that the Contract is invalid or an *ultra vires* act, by reason of a failure to have the proper authority to execute the Contract. In the event that a court of competent jurisdiction later determines that the Contract is or would be null and void for failure of the signatory to have proper or complete authority, this Contract shall nonetheless be deemed valid under the theory of "apparent authority," or in the sole alternative of the City, shall be deemed to be the act of the signatory, as an individual, who shall be fully responsible for its complete performance.

13.7 Sovereign Immunity

Nothing contained herein shall be construed or interpreted as a waiver of the sovereign immunity liability limits established under Florida Statutes § 768.28.

13.8 Severability

The parties to this Contract expressly agree that it is not their intention to violate any public policy, statutory or common law rules, regulations, or decisions of any government or regulatory body. If any provision of this Contract is judicially or administratively interpreted or construed as being in violation of any such policy, rule, regulation or decision, the provision, section, sentence, word, clause or combination thereof causing such violation will be inoperative (and in lieu thereof there will be inserted such provision, section, sentence, word, clause or combination thereof as may be valid and consistent with the intent of the parties under this Contract) and the remainder of this Contract, as amended, will remain binding upon the parties, unless the inoperative provision would cause enforcement of the remainder of this Contract to be inequitable under the circumstances.

13.9 Entire Contract

The written terms and provisions of this Contract shall supersede all prior verbal statements of any official or other representative of the City. Such statements shall not be effective or construed as entering into, or forming a part of, or altering in any manner whatsoever, this Contract or Contract documents.

Section 14. Public Records

Public Records Relating to Compliance, Request for Records; Noncompliance, & Civil Action

Note: If the Contractor has questions regarding the application of Chapter 119, Florida Statutes, to the Contractor's duty to provide public records relating to this contract, contact the office of the City Clerk as the custodian of Public Records for the City of Stuart, and all the respective departments at PublicRecordsRequest@ci.stuart.fl.us, City of Stuart, City Clerk 121 SW Flagler Avenue, Stuart, FL 34994 per F.S. 119.12.

In compliance with F.S. 119.0701 the Contractor shall:

A. Keep and maintain public records required by the public agency to perform the service.

B. Upon request from the public agency's custodian of public records, provide the public agency with a copy of the requested records or allow the records to be inspected or copied within a reasonable time at a cost that does not exceed the cost provided in this chapter or as otherwise provided by law.

C. Ensure that public records that are exempt or confidential and exempt from public records disclosure requirements are not disclosed except as authorized by law for the duration of the contract term and following completion of the contract if the contractor does not transfer the records to the public agency.

D. Upon completion of the contract, transfer, at no cost, to the public agency all public records in possession of the contractor or keep and maintain public records required by the public agency to perform the service. If the contractor transfers all public records to the public agency upon completion of the contract, the contractor shall destroy any duplicate public records that are exempt or confidential and exempt from public records disclosure requirements. If the contractor keeps and maintains public records upon completion of the contract, the contractor shall meet all applicable requirements for retaining public records. All records stored electronically must be provided to the public agency, upon request from the public agency's custodian of public records, in a format that is compatible with the information technology systems of the public agency.

E. A request to inspect or copy public records relating to a public agency's contract for services must be made directly to the public agency. If the public agency does not possess the requested records, the public agency shall immediately notify the contractor of the request, and the contractor must provide the records to the public agency or allow the records to be inspected or copied within a reasonable time.

F. If a contractor does not comply with the public agency's request for records, the public agency shall enforce the contract provisions in accordance with the contract.

G. A contractor who fails to provide the public records to the public agency within a reasonable time may be subject to penalties under Florida Statutes § 119.10.

H. If a civil action is filed against a contractor to compel production of public records relating to a public agency's contract for services, the court shall assess and award against the contractor the reasonable costs of enforcement, including reasonable attorney fees, if:

1. The court determines that the contractor unlawfully refused to comply with the public records request within a reasonable time; and

2. At least 8 business days before filing the action, the plaintiff provided written notice of the public records request, including a statement that the contractor has not complied with the request, to the public agency and to the contractor.

I. A notice complies with subparagraph 2 above, if it is sent to the public agency's custodian of public records and to the contractor at the contractor's address listed on its contract with the public agency or to the contractor's registered agent. Such notices must be sent by common carrier delivery service or by registered, Global Express Guaranteed, or certified mail, with postage or shipping paid by the sender and with evidence of delivery, which may be in an electronic format.

J. A contractor who complies with a public records request within eight (8) business days after the notice is sent is not liable for the reasonable costs of enforcement.

Section 15. Exhibits

The following Exhibits are attached to and made a part of this Contract:

Exhibit "A" – "Price Proposal as Submitted by Respondent and Accepted by City"

Exhibit "B" – "Original Invitation to Bid as Issued by City, including all Addenda"

Exhibit "C"- "Certificate of Insurance"

IN WITNESS WHEREOF, the City has hereunto subscribed and the Contractor has signed his, its, or their name, or names the date aforesaid.

CITY OF STUART, FLORIDA

ATTEST:

MARY R. KINDEL
CITY CLERK

MICHAEL J. MORTELL
CITY MANAGER

APPROVED AS TO FORM
AND CORRECTNESS:

LEE J. BAGGETT, ESQ
CITY ATTORNEY

CONTRACTOR

(Signature)

Anthony Houllis
Printed Name

MGRM
Title

PRICE TABLES

BID SCHEDULE

Line Item	Description	Quantity	Unit of Measure	Unit Cost	Total
1	MOBILIZATION	1	LS	$140,000.00	$140,000.00
2	GENERAL CONDITIONS	1	LS	$190,000.00	$190,000.00
3	DEMOLITION	1	LS	$55,000.00	$55,000.00
4	BYPASS SOLUTION	1	LS	$270,000.00	$270,000.00
5	CLEAN FACILITY AND PERFORM FULL CONDITION ASSESSMENT	1	LS	$20,000.00	$20,000.00
6	PERFORM STRUCTURAL REPAIRS (i.e., address rebar corrosion and concrete spalling)	1	LS	$0.00	$0.00
6.1	CONCRETE SPALLING/EXPOSED REBAR REPAIR (TYPE 1)	20	SF	$400.00	$8,000.00
6.2	CONCRETE SPALLING/EXPOSED REBAR REPAIR (TYPE 2)	45	SF	$450.00	$20,250.00
6.3	CONCRETE SPALLING/EXPOSED REBAR REPAIR (TYPE 3)	25	SF	$800.00	$20,000.00
7	REPAIR GATE ATTACHMENT	1	LS	$18,000.00	$18,000.00
8	REMOVE AND REPLACE ROOF STRUCTURE	1	LS	$202,000.00	$202,000.00
9	INSTALL PERMANENT GAURDRAIL	1	LS	$40,000.00	$40,000.00
11	ODOR CONTROL MODIFICATIONS	1	LS	$405,000.00	$405,000.00
12	ELECTRICAL AND I&C IMPROVEMENTS	1	LS	$109,000.00	$109,000.00
	Total				**$1,497,250.00**

INVITATION TO BID

2024-106

CITY OF STUART WATER RECLAMATION FACILITY HEADWORKS REHAB - PHASE 1

City of Stuart

121 SW Flagler Avenue

Stuart, FL 34994

RELEASE DATE: May 10, 2024

DEADLINE FOR QUESTIONS: June 7, 2024

RESPONSE DEADLINE: June 12, 2024, 2:30 pm

RESPONSES MUST BE SUBMITTED ELECTRONICALLY TO:

https://secure.procurenow.com/portal/stuartfl

City of Stuart

INVITATION TO BID

City of Stuart Water Reclamation Facility Headworks Rehab - Phase 1

I. Advertisement .....
II. Introduction .....
III. Instructions to Bidders .....
IV. General Information .....
V. Scope of Work .....
VI. Pricing Proposal .....
VII. Vendor Questionnaire .....

Attachments:

A - FDEP Headwork Rehabilitation Stuart WRF Permit Revision

B - Stuart_WRF Headworks Rehab_Phase I_ReBid Set_Specifications_March2024

C - Stuart_WRF Headworks Rehab_Phase I_ReBid Set_Drawings_March24

1. Advertisement

CITY OF STUART

2024-106

City of Stuart Water Reclamation Facility Headworks Rehab - Phase 1

Advertisement

The City encourages E-Bidding through OpenGov Procurement at https://procurement.opengov.com/portal/stuartfl. City of Stuart Water Reclamation Facility Headworks Rehab - Phase 1 will be received by the City of Stuart at the Procurement Office, 301 S.E Flagler Avenue Suite 204, Stuart, Florida, 34994, until Wednesday, June 12, 2024 at 2:30 pm.

A Non-Mandatory pre bid meeting will be held at Annex 300 SW Saint Lucie Ave Stuart, Florida at 10:00 am, Thursday, May 30, 2024.

If submitting via mail than please submit an original, two (2) copies and one (1) electronic copy (PDF format preferred) on a CD or flash drive must be submitted in sealed envelopes/packages addressed to Purchasing Division, City of Stuart, and marked "2024-106, City of Stuart Water Reclamation Facility Headworks Rehab - Phase 1. Submittals received after that date and time will not be accepted or considered and will be retained in the Procurement Office unopened

A complete bid package can be obtained by contacting the Procurement Office at 772-288-5320, purchasing@ci.stuart.fl.us or from OpenGov Procurement at https://procurement.opengov.com/portal/stuartfl or by calling (800) 711-1712. The City of Stuart is not responsible for the content of any bid package received through any 3rd party bid service or any source.

Mail/Overnight/Hand Deliver Submittal Responses to:

Procurement Office

301 SE Ocean Blvd., Suite 204

Stuart, Florida 34994

Mark outside of envelope: 2024-106, City of Stuart Water Reclamation Facility Headworks Rehab - Phase 1

Published: Friday, May 10, 2024

2. Introduction

2.1. Summary

The work consists of rehabilitation of The City of Stuart Water Reclamation Facility headworks structure, including installation of a temporary headworks bypass system, removal of the second-floor enclosed roof structure, detailed structural condition assessment and minor repairs to influent channels and gates, installation of a new steel canopy, modifications to the existing odor control system, and associated electrical improvements.

2.2. Background

The City of Stuart owns and operates a Water Reclamation Facility (WRF) which has an annual average daily flow permitted capacity of 4 million gallons per day (mgd). The plant was originally constructed in 1955 and has undergone several expansions and upgrades since that time. In 2010, an odor control and roof enclosure project was implemented. The purpose was to mask and/or enclose select WRF components in order to visually integrate the WRF into the surrounding community (in which it is located adjacent to the County's Courthouse Complex). One of the structures that received a roof enclosure and odor control system was the existing headworks structure.

The headworks facility is a reinforced concrete structure with mechanical screening and grit removal features located on the upper level with concrete flow channels. The concrete surfaces in the channels below the upper level were lined with a corrosion protection epoxy. The majority of the upper level is enclosed by a metal building structure. This structure encloses the mechanical and manual bar screens and flow channels. Odor control ducts were installed to remove air containing high concentrations of hydrogen sulfide and treat the foul air stream through biological scrubbing equipment. Below the channels and at the lower level exists screenings and grit dumpster and grit pumping equipment.

2.3. Contact Information

Marc Rogolino
U&E Project Manager
121 SW Flagler Ave.
Stuart, FL 34994
Email: mrogolino@ci.stuart.fl.us
Phone: (772) 221-4700

Department:
Utilities and Engineering

2.4. Timeline

Release Project Date	May 10, 2024

Pre-Proposal Meeting (Non-Mandatory)	May 30, 2024, 10:00am Annex 300 SW Saint Lucie Ave Stuart, Florida
Question Submission Deadline	June 7, 2024, 5:00pm
Proposal Submission Deadline	June 12, 2024, 2:30pm Microsoft Teams Need help? Join the meeting now Meeting ID: 275 841 632 861 Passcode: H7pGde --- Dial-in by phone +1 872-242-8065,,347156541# United States, Chicago Find a local number Phone conference ID: 347 156 541# For organizers: Meeting options | Reset dial-in PIN

3. Instructions to Bidders

3.1. Submittal

Each bidder shall furnish the information required on the bid schedule and each accompanying sheet thereof on which he makes an entry. Offers submitted on any other format are subject to disqualification.

The City of Stuart is registered with OpenGov Procurement, you may submit your bid electronically by registering on the City's e-Procurement Portal https://procurement.opengov.com/portal/stuartfl. Otherwise, all bids must be submitted in a sealed envelope plainly marked on the outside with the invitation to bid number, date and time of opening.

If not submitting electronically then an original, two (2) copies and one (1) electronic copy (PDF format preferred) on a CD or flash drive must be submitted in sealed envelopes/packages addressed to Purchasing Division, City of Stuart by the due date and time. Submittals received after that date and time will not be accepted or considered and will be retained in the Procurement Office unopened.

It is the bidder's responsibility to assure that Bids are received in the City of Stuart Procurement Office, 301 SE Ocean Blvd., Suite 204 Stuart, Florida 34994, not later than 2:30 pm, on the day and date shown above. Any received after this date and time will not be accepted or considered and will be returned unopened to the bidder. No telegraphic or facsimile offers will be considered.

3.2. City Representative

Bidders are requested not to contact the City Commission, requesting/evaluating Departments or Divisions from the time of the issuance of the solicitation or advertisement until such time as the agency provides notice of an intended decision or until thirty (30) days after opening 'the bids, whichever is earlier. Any questions from bidders or evaluating Departments or Divisions will be answered through the Procurement Division.

Alaina Knofla

Procurement Coordinator

aknofla@ci.stuart.fl.us

(772) 288-5320

3.3. Bid Opening

Bids will be opened and read aloud via Teams you may join by logging into:

Microsoft Teams Need help?

Join the meeting now

Meeting ID: 275 841 632 861
Passcode: H7pGde

Dial-in by phone

+1 872-242-8065,,347156541# United States, Chicago
Find a local number
Phone conference ID: 347 156 541#
For organizers: Meeting options | Reset dial-in PIN

3.4. Withdrawal of Bids

Bids may not be withdrawn for a period of 30 days after the public opening date.

3.5. Protest

Any actual or prospective bidder who protests the reasonableness, necessity or competitiveness of the terms and/or conditions of the invitation to bid, selection or award recommendation shall file such protest in accordance with section 20 of the Procurement Manual, which can be found on the City of Stuart webpage.

3.6. Questions and Answers

The City will not respond to oral inquiries. Bidders shall submit all inquiries regarding this bid via the City's e-Procurement Portal, located at https://secure.procurenow.com/portal/stuartfl. Please note the deadline for submitting inquiries. All answers to inquiries will be posted on the City's e-Procurement Portal. Bidders may also click "Follow" on this bid to receive an email notification when answers are posted. It is the responsibility of the bidder to check the website for answers to inquiries.

All proposers are expected to carefully examine the proposal documents. Any ambiguities or inconsistencies should be brought to the attention of the City through written communication with the City prior to opening of the proposals.

Respondents may not contact any, City employee or City elected official during this solicitation process. All questions or requests for clarification must be routed through the e-procurement portal.

3.7. Addenda

https://procurement.opengov.com/portal/stuartflo register for an account via the City's e-Procurement Portal hosted by OpenGov Procurement. Once bidder has completed registration, you will receive addenda notifications to your email by clicking "Follow" on this project. Ultimately, it is sole responsibility of each bidder to periodically check the site for any addenda at https://secure.procurenow.com/portal/stuartfl.

3.8. Delivery

Product delivery shall be a factor in award. Failure to perform within delivery deadline(s) set forth in the specifications or any other contract document shall constitute default.

Goods, services, supplies or equipment covered in the specifications shall be delivered F.O.B. Destination.

3.9. Right to Reject

The City reserves the right to reject any or all bids, without recourse, to waive technicalities or to accept the bid which in its sole judgment best serves the interest of the City. Cost of submittal of this bid is considered an operational cost of the bidder and shall not be passed on to or be borne by the City.

3.10. Miscellaneous

https://procurement.opengov.com/portal/stuartflthe terms and conditions of this solicitation.

Please check your prices before submitting your bid, as no change in prices will be allowed after the opening. All prices and notations must be in ink or typewritten. Be sure your bid is signed.

All items quoted must be in compliance with the specifications. Alternate bids will not be considered unless they are specifically called for in this solicitation.

The City may accept any item or group of items on any bid unless the offeror qualifies his bid by specific limitations.

Bidders are expected to examine the specifications, delivery schedule, bid prices, extensions and all instructions pertaining to supplies and services. In the event of extension error(s), the unit price will prevail and the Bidder's total offer will be corrected accordingly. In the event of addition errors, the extended totals will prevail and the Bidder's total will be corrected accordingly. Bids having erasures or corrections must be initialed in ink by the Bidder.

Bids may be received up to but not later than Wednesday, June 12, 2024 at 2:30 pm via the City's e-Procurement Portal located at https://secure.procurenow.com/portal/stuartfl. The City's e-Procurement Portal Clock is the official clock for the determination of all deadline dates and times. Without exception, responses will not be accepted after the submission deadline regardless of any technical difficulties such as poor internet connections. The City of Stuart strongly recommends completing your response well ahead of the deadline.

Failure to comply with these instructions may result in disqualification of your bid.

4. General Information

4.1. Delays

The City may delay scheduled due dates, if it is to the advantage of the City to do so. The City will notify bidders of all changes in scheduled due dates by written addenda submitted to the City.

4.2. Qualification Submission and Withdrawal

The City will receive all proposals at the following addresses:

The City prefers electronic submission of bids and proposals. Please submit electronic responses via the City e-Procurement Portal https://procurement.opengov.com/portal/stuartfl. By way of the e-Procurement Portal, responses will be locked and digitally encrypted until the submission deadline passes.

If you would like to submit a paper copy please submit at the following address:

Stuart City Hall

Procurement Office

301 SE Ocean Blvd., Suite 204

Stuart, Florida 34994

To facilitate processing, please mark the outside of the envelope as follows: 2024-106 **"City of Stuart Water Reclamation Facility Headworks Rehab - Phase 1"** The envelope shall also include the bidder's return address.

If not submitting electronically, respondents must submit one (1) original and two (2) copies of the proposal submittal with each marked "**COPY**", and **one (1) electronic copy (PDF format preferred) on a CD** in a sealed envelope marked as noted above. A bidder may submit the proposal by personal delivery, mail, or express shipping service.

THE CITY MUST RECEIVE ALL BIDS BY

2:30 pm **ON**Wednesday, June 12, 2024

Due to the irregularity of mail service, the City cautions bidders to assure actual delivery of mailed or hand-delivered proposals directly to the City's Procurement Office, as specified above, prior to the deadline set for receiving proposals. Telephone confirmation of timely receipt of the proposal may be made by calling (772) 288-5320, before proposal closing time. A proposal received by the City Procurement Office after the established deadline will be retained unopened.

Bidders may withdraw their proposal submissions by notifying the City in writing at any time prior to the deadline for proposal submittal. Bidders may withdraw their submissions in person or by an authorized representative. Bidders and authorized representatives must provide the letter of withdrawal, picture identification, proof of authorization (in the case of authorized representatives) and provide the City

with a signed receipt for the withdrawn proposal. After the deadline, proposals once opened, become a public record of the City and are subject to the provisions of the Florida Public Records Law. As such they are subject to public disclosure in accordance with Chapter 119, Florida Statutes.

4.3. Addenda

https://procurement.opengov.com/portal/stuartfl register for an account via the City's e-Procurement Portal hosted by ProcureNow. Once bidder has completed registration, you will receive addenda notifications to your email by clicking "Follow" on this project. Ultimately, it is sole responsibility of each bidder to periodically check the site for any addenda at https://secure.procurenow.com/portal/stuartfl

4.4. Equal Opportunity

The City recognizes fair and open competition as a basic tenet of public procurement and encourages participation by minority and women owned business enterprises.

4.5. Insurance

Proof of the following insurance will be furnished by the successful bidder by certificate of insurance, which name the City of Stuart its offices, board members, employees, and agents as additional insured on general liability & automobile liability insurance policies. The policies must be specifically endorsed to grant the City the same notification rights that it provides to the first named insured as respects cancellation and nonrenewal. The City by and through risk management department and in cooperation with the contracting department, reserves the rights to review, modify reject or accept any required policies of insurance, including limits, coverages, or endorsements, herein from time to time throughout the term of this contract. All insurance carriers must have an AM Best rating of at least A-VII or better. When a self-insured retention or deductible exceeds $5,000, the City reserves the right, but not obligation, to review and request or audited financial statement.

All contractors, including any independent contractors and subcontractors utilized must comply with the following insurance requirements:

Loss Deductible Clause: The City shall be exempt from, and in no way liable for, any sums of money which may represent a deductible in any insurance policy. The payment of such deductible shall be the sole responsibility of the professional and/or subcontractor providing such insurance.

Workers' Compensation: with limits equal to Florida statutory requirements. Employers' liability must include limits of at least $100,000 each accident, $100,000 each disease/employee, $500,000 each disease/maximum. A waiver of subrogation must be provided. Coverage should apply on a primary basis. Should scope of work performed by contractor qualify its employee for benefits under federal workers compensation statute (example, U.S. Longshore & Harbor Workers Act or Merchant Marine act), proof of appropriate federal act coverage must be provided.

If the contractor maintains higher limits than the minimums shown above, the City of Stuart requires and shall be entitled to coverage for the higher limits maintained by the contractor.

Any insurance provided which does not meet the above requirements will not be deemed acceptable under the terms of this contract unless accepted in writing by the City's Risk Management department.

Commercial General Liability: insurance, Occurrence Form – ISO CG 0001 or equivalent, including Contractual Liability, to cover the hold harmless agreement set forth herein, with limits of not less than:

A. Each occurrence $2,000,000

B. Personal/advertising injury $1,000,000

C. Products/completed operations aggregate $3,000,000

D. General aggregate $10,000,00

E. Fire damage $100,000 Any 1 fire

F. Medical expense $10,000 Any 1 person

An additional insured endorsement must be attached to the certificate of insurance and must include coverage for completed operations (ISO forms CG2010 & CG2037) under the General Liability policy. Products & Completed Operations coverage to be provided for a minimum of 10 years date of possession by owner or completion of contract. Coverage is to be written on an occurrence form basis and shall apply as primary and non-contributory. A per project aggregate limit endorsement should be attached. Defense costs are to be in addition to the limit of liability. A waiver of subrogation is to be provided in favor of the City of Stuart. Policy shall contain no exclusion for third party action-over claims (injury to subcontract workers). If applicable, there shall be no exclusion for EIFS. Coverage should extend to independent contractors and fellow employees. Contractual liability is to be included. Any cross-liability exclusion should not extend to Additional Insured's.

Any subcontractors or independent contractors utilized must list the City of Stuart as additional insured including completed operations (ISO Forms CG 2038 & CG 2037).

Business Auto Liability: Must cover any auto (all owned, hired, and non-owned autos) with limits of not less than $1,000,000 per accident. In the event bidder does not own any automobiles, the City of Stuart will accept proof of hired and non-owned auto liability only. Certificate holder must be listed as additional insured. A waiver of subrogation must be provided. Coverage should apply on a primary basis.

Insurance Requirements:– Fifteen (15) days prior to the commencement of any Work under the Contract Documents, a certificate of insurance shall be provided to the City of Stuart for review and approval. The certificate shall provide that: (a) City of Stuart as Owner and named as an additional insured on the commercial general liability, auto liability, and Contractor's Builders' Risk "All Risk" insurance policies; (b) the Contractor's insurance coverage shall be primary; and (c) City of Stuart as Owner and will be given thirty (30) days' notice prior to cancellation or modification of any required insurance and such notice shall be in writing by registered mail, return receipt requested and addressed to the City of Stuart. The Contractor shall be responsible to ensure that all subcontractors comply with all insurance requirements of the Contract Documents.

All coverage shall be maintained without interruption from the date of commencement of the Work and remain in effect at least until final payment and at all times thereafter when Contractor may be correcting, removing, or replacing defective Work in accordance with Paragraph 13.07 of the General Conditions. In addition, with respect to completed operations insurance, and any insurance coverage written on a claims-made basis, such insurance shall remain in effect for at least two years after final

payment. Contractor shall furnish Owner and Engineer with evidence satisfactory to Owner of the continuation of such insurance at final payment and again one year thereafter, so that Owner is assured of such continuing coverage.

All insurers must be authorized to do business in Florida and have a Best Key Rating of A- VII.

Certificates of Insurance: The Proposer, upon notice of award, will furnish Certificate of Insurance Forms. These shall be completed by the authorized Resident Agent and returned to the Purchasing Office. This certificate shall be dated and show:

A. The name of the insured contractor, the specified job by name and job number, the name of insurer, the number of the policy, its effective date, and its termination date.

B. Statement that the Insurer will mail notice to the City at least thirty (30) days prior to any material changes in provisions or cancellation of the policy.

C. The City of Stuart and Consultant is to be specifically included as an ADDITIONAL INSURED on General Liability Insurance, Business Automobile Liability Insurance, and Contractor's Builders Risk "All Risk" insurance policies.

D. The City of Stuart shall be named as Certificate Holder. Please Note that the Certificate Holder should read as follows:

    1. City of Stuart 121S.W. Flagler Avenue Stuart, FL 34994

E. No City Division, Department, or individual name should appear on the certificate. NO OTHER FORMAT WILL BE ACCEPTABLE.

F. The "Acord" certification of insurance form should be used.

4.6. Public Entity Crimes

A person or affiliate who has been placed on the convicted vendor list following a conviction for a public entity crime may not submit proposals or contract with the City for construction of a public building or public works; may not submit bids for leases of real property to a public entity; may not be awarded or perform work as a contractor, supplier, subcontractor, or consultant under a contract with any public entity; and may not transact business with any public entity in excess of the threshold amount provided for in s. 287 for CATEGORY TWO for a period of 36 months from the date being placed on the convicted vendor list. Questions regarding this statement should be directed to the State of Florida, Bureau of State Procurement (850) 488-8440.

4.7. Suspended Vendor

http://dms.myflorida.com/business_operations/state_purchasing/vendor_information or List will not be considered for award. The Suspended Vendor List is available on the State's website at:

http://dms.myflorida.com/business_operations/state_purchasing/vendor_information

4.8. Assignment & Subcontracting

The successful bidder will not be permitted to assign its contract with the City without obtaining prior written approval of the City of Stuart. If a vendor subcontracts any portion of a contract for any reason, the bidder must include, in writing the name and address of the Subcontractor. Name of the person to be contacted, include telephone number and extent of work to be performed. This information is to be submitted with bid response. If vendor should need to change subcontractor information, changes are subject to the approval by the City. The City reserves the right to reject a proposal of any bidder if the proposal names a subcontractor who has previously failed in the proper performance of an award or failed to deliver on time contract of a similar nature, or who is not in a position to perform properly under this award.

4.9. Public Records

Bids become "public records" and shall be subject to public disclosure consistent with Chapter 119.07 Florida Statutes. Document files may be examined, during normal working hours by appointment. Requested information in this ITB will not be considered confidential and/or proprietary.

PUBLIC RECORDS LAW: Public Records Relating to Compliance, Request for Records; Noncompliance, & Civil Action

Note: If the Contractor has questions regarding the application of Chapter 119, Florida Statutes, to the Contractor's duty to provide public records relating to this contract, contact the office of the City Clerk as the custodian of Public Records for the City of Stuart, and all the respective departments at cityclerk@ci.stuart.fl.us, City of Stuart, City Clerk 121 SW Flagler Avenue, Stuart, Fl. 34994 per F.S. 119.12.

In compliance with F.S. 119.0701 the Contractor shall:

A. Keep and maintain public records required by the public agency to perform the service.

B. Upon request from the public agency's custodian of public records, provide the public agency with a copy of the requested records or allow the records to be inspected or copied within a reasonable time at a cost that does not exceed the cost provided in this chapter or as otherwise provided by law.

C. Ensure that public records that are exempt or confidential and exempt from public records disclosure requirements are not disclosed except as authorized by law for the duration of the contract term and following completion of the contract if the contractor does not transfer the records to the public agency.

D. Upon completion of the contract, transfer, at no cost, to the public agency all public records in possession of the contractor or keep and maintain public records required by the public agency to perform the service. If the contractor transfers all public records to the public agency upon completion of the contract, the contractor shall destroy any duplicate public records that are exempt or confidential and exempt from public records disclosure requirements. If the

contractor keeps and maintains public records upon completion of the contract, the contractor shall meet all applicable requirements for retaining public records. All records stored electronically must be provided to the public agency, upon request from the public agency's custodian of public records, in a format that is compatible with the information technology systems of the public agency.

A request to inspect or copy public records relating to a public agency's contract for services must be made directly to the public agency. If the public agency does not possess the requested records, the public agency shall immediately notify the contractor of the request, and the contractor must provide the records to the public agency or allow the records to be inspected or copied within a reasonable time.

If a contractor does not comply with the public agency's request for records, the public agency shall enforce the contract provisions in accordance with the contract.

A contractor who fails to provide the public records to the public agency within a reasonable time may be subject to penalties under F.S. 119.10.

If a civil action is filed against a contractor to compel production of public records relating to a public agency's contract for services, the court shall assess and award against the contractor the reasonable costs of enforcement, including reasonable attorney fees, if:

A. The court determines that the contractor unlawfully refused to comply with the public records request within a reasonable time; and

B. At least 8 business days before filing the action, the plaintiff provided written notice of the public records request, including a statement that the contractor has not complied with the request, to the public agency and to the contractor.

A notice complies with subparagraph 2 above, if it is sent to the public agency's custodian of public records and to the contractor at the contractor's address listed on its contract with the public agency or to the contractor's registered agent. Such notices must be sent by common carrier delivery service or by registered, Global Express Guaranteed, or certified mail, with postage or shipping paid by the sender and with evidence of delivery, which may be in an electronic format.

A contractor who complies with a public records request within eight (8) business days after the notice is sent is not liable for the reasonable costs of enforcement.

4.10. Business Registration

Bidders seeking to do business with Martin County (that fall under the categories listed below) shall, before award of contract, be registered, or shall have applied for registration, with the Florida Department of State, Division of Corporations in accordance with the provisions of Chapter 607 and/or 620, Florida Statutes (https://dos.myflorida.com/sunbiz/): • Corporations [foreign or domestic]

• Limited Liability Companies (LLC)

• Non-profits

• Partnerships

Doing Business As [DBA] - If the Bidder's name stands apart from the owner's or partners' personal legal name, or the officially registered name of an LLC or corporation, the Bidder, before award of contract, shall be registered as a fictitious name with the Florida Division of Corporations in accordance with the provisions of Chapter 865, Florida Statutes. The above requirements are also applicable to all subcontractors proposed in the bid submittal.

4.11. Licenses

Bidders shall, at the time of submitting a bid in response to this solicitation, be licensed by the appropriate federal, state and local regulatory agencies as it relates to Bidders' profession or business. Bidder shall provide proof of certification and/or registration as a Contractor by the State of Florida applicable to the work required in the solicitation.

The above requirements are also applicable to all subcontractors proposed in the bid submittal.

4.12. Business Tax Receipt

Bidder shall comply with Business Tax Receipt requirements for their business location. A copy of the business tax receipt or proof of exemption shall be submitted prior to awarding the bid.

4.13. Other Governmental Entities

When there is sufficient capacity or quantities available, awarded bidder may provide to other governmental agencies, so requesting, the products or services awarded in accordance with the terms, conditions, and prices of the bid and resulting contract. Prices shall be F.O.B. Destination to the requesting agency. Each governmental entity allowed to use this contract shall do so independent of any other governmental entity.

4.14. Contract Amendment

The City reserves the right to delete, add or revise locations under this proposal at any time during the contract term when and where deemed necessary. If any locations are added or deleted from the contract, the rate quoted shall be used to determine the adjusted contract price.

4.15. Non Exclusive Contract

CONTRACTOR agrees and understands that the contract shall not be construed as an exclusive arrangement and further agrees that the City may, at any time, secure similar or identical services at its sole option.

4.16. Estimated Quantities

It shall be understood and agreed that quantities designated herein are estimated only and may be increased or decreased in accordance with the actual requirements of the City. The City may require modifications and changes to this contract, as it relates to quantities, areas, frequency of services and specified services. The Contractor shall provide the City with the cost for such additional services. All rates shall be in accordance with the unit cost structure submitted by the contractor and accepted by the City.

4.17. Default

In the event that the Contractor cannot respond adequately to the needs of the City by reason of equipment failure or any other reason, the Contractor shall advise the City, as soon as possible, and further advise as to the length of said inability. The City may then consider said inability to be a breach of this Contract and may undertake the necessary work through its own services or those of another Contractor. The City shall have the right to deduct the cost incurred in having to provide said services from the payments to be made to the Contractor under this Contract.

4.18. Background Information

As part of the evaluation process, the City reserves the right, to require a Bidder to submit such evidence of his/her qualifications as it may deem necessary, and may consider any evidence available to it as to the qualifications and abilities of the Bidder, including past performance (experience) with the City by the Bidder or any of their Owners.

4.19. Competency of Respondents

Proposals will be considered only from firms which are regularly engaged in the business of providing the goods and/or services as described in this ITB and who can provide evidence that they have established a satisfactory record of performance to insure that they can satisfactorily execute the services under the terms and conditions stated herein. The term "equipment and organization" as used herein shall be construed to mean a fully equipped and well established company in line with the best business practices in the industry and as determined by the proper authorities of the City.

4.20. Extra Work

The City may, at any time by a written order and without notice to the sureties, require the performance of such extra work as it may find necessary or desirable arising out of the modification of the specification or plans. An order for extra work shall be valid only by an executed change order. All work so ordered must be performed by the Contractor. The amount of compensation to be paid to the Contractor for any work so ordered shall be determined as follows:

A. By such applicable unit prices, if any, as are set forth in the contract; or

B. If no such unit prices are so set forth, then by a lump sum or other unit prices mutually agreed upon by the City and the Contractor; or

C. If no such unit prices are so set forth in the contract and if the parties cannot agree upon a lump sum or other unit prices, then by the actual net cost in money to the Contractor of the extra work performed and the cost shall be determined as follows:

1) For all labor and foreman in direct charge of the authorized operations, the Contractor shall receive the current local rate of wages to be agreed upon in writing before starting such work, for each hour said labor and foreman are actually engaged thereon, to which shall be added an amount equal to 15 per cent of the sum thereof which shall be considered and accepted as full compensation for general supervision and the furnishing of small tools and miscellaneous equipment used, such as picks, shovels, hand pumps, and similar items.

2) For all materials used, the Contractor shall receive the actual cost of such materials delivered at he site and previously approved delivery point as established by original receipted bills. No percentage shall be added to this cost.

3) For special equipment and machinery such as power-driven pumps, concrete mixers, trucks, and tractors, or other equipment, required for the economic performance of the authorized work, the Contractor shall receive payment based on the agreed rental price for each item of equipment and the actual time of its use on the work. No percentage shall be added to this sum.

4) The Contractor's profit shall be computed by taking 10% of the sum of Items 1 and 2. The total cost of performing this extra work shall be the sum of Items 1, 2, 3, and 4.

Records of extra work done, if any, shall be reviewed at the end of each day by the Contractor or his representative and the Engineer, duplicate copies of accepted records made and signed by both the Contractor or his representative and the Engineer, and one copy retained by each.

Claim for payment for extra work shall be submitted by the Contractor upon certified statement supported by receipted bills.

Such statements shall be submitted for the current contract payment for the month in which the work was done. No claim for extra work shall be allowed unless the same was ordered, in writing, as aforesaid and the claim presented at the time of the first estimate after the work is completed.

4.21. Bond Guarantee

A proposal guarantee must be submitted with the proposal, **if the total amount proposed exceeds $50,000**. The bond shall be in an amount equal to ten percent (10%) of the total amount. The guarantee may be in the form of a Surety Bond with a carrier duly licensed and authorized to do business in the State of Florida, a Cashier's Check or a Certified Check (checks made payable to The City of Stuart). Purpose of the proposal guarantee is to assure the apparent low, responsive and responsible bidder will enter into a contract to provide the described services. Should the bidder not enter into a contract the proposal guarantee shall be retained by the City to defray the additional costs of either awarding to the second low, responsive and responsible bidder or re-advertise and re-solicit the project. *If e-bidding, bidder shall upload a copy of the bond to OpenGov Procurement (Procurement Portal (opengov.com) and submit the original bid bond to City of Stuart, Attn: Purchasing Division, 301 SE Ocean Blvd., Suite 204 Stuart, Florida 34994 within three (3) calendar days of the bid opening. Failure to provide bid bond may deem the bid non-responsive.

4.22. Payment & Performance Bonds

The successful bidder, when awarded a contract, will be required to furnish payment and performance bonds with a carrier duly licensed and authorized to do business in the State of Florida, equal to one hundred percent (100%) of the total amount of the contract to assure faithful performance and timely payments to all persons providing labor, materials or supplies used in the performance of the work.

4.23. Permits

The Contractor is responsible for applying for and obtaining any and all required building, demolition or excavation permits required by any municipality or county having jurisdiction over the conduct of the

work being pursued (to include the City of Stuart and Martin County). The Contractor should take every precaution that he is aware of the cost of all required permit fees and should include those costs in his bid in the appropriate item. All City permits will be a no fee permit. **The City of Stuart has received a FDOT permit for Landscape, Irrigation and hardscape, however the construction is contingent on maintenance agreement approval from FDOT.**

4.24. Liquidated Damages

The Contractor shall pay to the party of the first part, as damages for non-completion of the work within the time stipulated for its completion, one hundred dollars ($100.00) for each and every day for the first thirty (30) days and five hundred dollars ($500.00) for each and every day thereafter, which may exceed the stipulated time for its completion, is hereby agreed upon, fixed and determined by the parties hereto as liquidated damages that the party of the first part will suffer by reason of such default and not by way of penalty.

The party of the first part is hereby authorized to deduct the said sum (as specified above) from the moneys which may be due or become due said Contractor for the work under this contract, or as much thereof as the Owner may, at its own option, deem just and reasonable.

4.25. Suspension of Work Due to Weather

During inclement weather, all work which might be damaged or rendered inferior by such weather conditions shall be suspended. The orders and decisions of the Engineer as to suspension shall be final and binding. During the suspension of the work for any cause, it must be suitably covered and protected so as to preserve it from injury by the weather or otherwise. If the Engineer shall so direct, the rubbish and surplus material shall be removed.

The Contractor shall not be entitled to any extension of time for delays resulting from weather unless the Contractor has requested, in writing, to the City by 11 am the day of the weather delay. If the Owner or Engineer orders the suspension of work due to inclement weather, the Contractor shall receive an extension of time for the full period when such suspension is in effect until the suspension is lifted by the Owner/Engineer.

5. Scope of Work

5.1. PURPOSE

Enter Texts

5.2. LIQUIDATED DAMAGES

The Contractor shall pay to the party of the first part, as damages for non-completion of the work within the time stipulated for its completion, one hundred dollars ($100.00) for each and every day for the first thirty (30) days and five hundred dollars ($500.00) for each and every day thereafter, which may exceed the stipulated time for its completion, is hereby agreed upon, fixed and determined by the parties hereto as liquidated damages that the party of the first part will suffer by reason of such default and not by way of penalty. The party of the first part is hereby authorized to deduct the said sum (as specified above) from the moneys which may be due or become due said Contractor for the work under this contract, or as much thereof as the Owner may, at its own option, deem just and reasonable.

5.3. START OF WORK AND TIME FOR COMPLETION

It is hereby understood and mutually agreed by and between parties hereto that the time of completion is an essential condition of this contract. By submitting a proposal response, successful respondent agrees to start the work within ten (10) days of issuance of Notice to Proceed. All performance of the Contract Work shall be completed within sixty (60) calendar days of the date of issuance of the NTP. Commencement of the Contract Work by the Contractor shall be deemed a waiver of the NTP and shall constitute the date of commencement for the purpose of the completion deadline.

5.4. SITE INSPECTION

A. It is the bidder's responsibility to become fully informed as to the nature and extent of the work required and its relation to any other work in the area, including possible interference from other site activities.

B. The contractor is to verify to his own satisfaction the figures appearing in these specifications. The Zone5 Mill/Overlay and Point Repairs project, as described, at the prices proposed on the proposal form. After award, no extra charge or compensation will be allowed by the City as a result of differences between actual materials and labor, unless by reason of unforeseeable causes beyond his control and without fault or negligence, including, but not restricted to acts of God or neglect of any other contractor.

5.5. EQUIPMENT

All equipment to be utilized by the successful bidder to perform, as detailed herein must be approved by the Public Works Director; or his designee. The contractor specifically agrees to remove and replace any equipment judged by the City to be poorly operating excessively noisy or dirty or in any other meaningful way disturbing to the public welfare.

5.6. INSPECTION AND DIRECTION

The work will be conducted under the general direction of the Public Works Director or designee, and is subject to inspection to insure compliance with the terms of the bid. The Public Works Director or designee will make final inspection of the work covered by this contract when it is completed and finished in all respect in accordance with specifications and must be approved before payment is made. The contractor will notify the City upon completion of replacement, repair or maintenance and the City agrees to provide inspection of the reported work within two (2) working days following the report of work completion. Any work found to be unsatisfactory by the City shall be reported to the contractor within that same period. The contractor agrees to finish all work to the satisfaction of the City, at no additional cost, prior to receiving payment for such work.

5.7. INVOICING AND PAYMENT

The City requires a firm price for each contract period. Invoices will be checked to confirm compliance with quoted pricing. Failure to hold prices firm through each contract term will be grounds for contract termination. Payment will be made upon completion and acceptance of the work, net 30 days.

5.8. BUSINESS OPERATIONS

A. Hours of Operation: Unless otherwise directed by the Public Works Director; or his designee, the successful Contractor(s) shall insure that the following schedule is adhered to and services as required must be scheduled to insure that all work occurs between the hours of 7:00 AM and 5:00 PM; All work performed outside of hours of operation must be approved in advanced by an authorized representative of the City.

B. Inclement Weather Conditions: Upon approval by the Public Works Director or designee, the Contractor may cease operations of services during inclement weather conditions.

C. Observed Holidays New Year's Day, Martin Luther King Day, Memorial Day, Independence Day, Labor Day, Veteran's Day, Thanksgiving Day & Day After, Christmas Eve & Day.

5.9. PUBLIC SAFETY AND CONVENIENCE

In the Contractor's use of streets and parking lots for the work to be done under these specifications, he/she shall conform to all Municipal, County, State and federal laws and regulations as applicable. The Contractor shall at all times so conduct his/her work so as to ensure the least possible obstruction to normal pedestrian and vehicular traffic including access to all public and private properties during all stages of work, and inconvenience to the general public and the residents in the vicinity of the work, and to ensure the protection of persons and property, in a manner satisfactory to the Public Works Director or appointed designee. There shall be no obstruction of the travel lanes between the hours of 7:00-9:00 am and 4:00-6:00 pm without approval from the Public Works Director or designee.

5.10. PROTECTION OF PROPERTY

The Contractor shall provide all signs, barricades, and/or flashing lights, and take all necessary precautions to protect buildings and personnel. All work shall be complete in every respect and accomplished in a satisfactory, workmanlike manner. The Contractor shall at all times guard against damage or loss to the property of the City of Stuart, including but not limited to safeguard sidewalks,

curbing, road surfaces and motor vehicles on or around all job sites. Damage to public or private property shall be the responsibility of the Contractor and shall be held responsible for replacing or repairing any such loss or damage at the expense of the Contractor. The City of Stuart may withhold payment or make such deductions, as deemed necessary, to ensure reimbursement or replacement for loss or damage to property through negligence of the successful bidder or their agents.

5.11. TIME OF STARTING WORK

The work embraced in this contract shall be actively begun within ten days after notice has been given by the Engineer or Owner to commence construction. The work shall be carried on regularly and uninterruptedly with sufficient force to ensure its completion within the time specified in the bid. Days when weather conditions prevent the continuance of the work shall not be charged against the contract time. Failure to do so shall render the Contractor liable to the City of Stuart in the amount of one hundred dollars ($100.00) as liquidated damages for each and every day's delay in commencing work. For reasons satisfactory to the Owner, said Owner may, at its own option, waive any claims on the Contractor for damages here referred to. The Contractor shall be responsible for the protection of property in the areas in the adjacent vicinity of the project(s); and for the protection of his own equipment, supplies, materials and work, against any damage resulting from the elements (such as flooding, rainstorms, wind damage, or other acts of God) or vandalism.

5.12. ACCESSIBILITY STANDARDS

In respect to the supply and/or installation of the services and/or items as outlined under this bid/contract; the Bidder/Contractor certifies that the work will be done or the item provided is in compliance with the applicable ADA Standards and/or in compliance with the Florida Accessibility Code for Building Construction. All applicable shop drawings will be submitted for review to ensure that the product or the work as required by this bid is in compliance with the applicable ADA Standards and/or in compliance with the Florida Accessibility Code for Building Construction.

5.13. SUSPENSION OF WORK DUE TO WEATHER

During inclement weather, all work which might be damaged or rendered inferior by such weather conditions shall be suspended. The orders and decisions of the Engineer as to suspension shall be final and binding. During the suspension of the work for any cause, it must be suitably covered and protected so as to preserve it from injury by the weather or otherwise. If the Engineer shall so direct, the rubbish and surplus material shall be removed.

The Contractor shall not be entitled to any extension of time for delays resulting from weather unless the Contractor has requested, in writing, to the City by 11 am the day of the weather delay. If the Owner or Engineer orders the suspension of work due to inclement weather, the Contractor shall receive an extension of time for the full period when such suspension is in effect until the suspension is lifted by the Owner/Engineer.

5.14. CONTRACTOR'S UNDERSTANDING

The party of the second part hereby admits and agrees that he has carefully read and considered the instructions to bidders herewith, and that he has made his proposal and hereby makes this Contract with full knowledge and acquiescence therein.

5.15. SUBCONTRACTOR

The Contractor shall not sublet the whole or any part of the work without the written consent and approval of the Procurement & Contracting Services Manager. Within ten (10) days after official notification of starting date, the Contractor must submit in writing, to the Procurement Manager, a list of all subcontractors. No work shall be done by any subcontractor until such subcontractor has been officially approved by the Procurement Coordinator. A subcontractor not appearing on original list will not be approved without written request submitted to the Procurement Coordinator and approved by the Owner. In all cases, the Contractor shall give his personal attention to the work of the subcontractors and the subcontractor is liable to be discharged by the Engineer for neglect of duty, incompetence or misconduct.

5.16. City of Stuart Water Reclamation Facility Headworks Rehab - Phase 1

The Work consists of rehabilitation of The City of Stuart Water Reclamation Facility headworks structure, including installation of a temporary headworks bypass system, removal of the second-floor enclosed roof structure, detailed structural condition assessment and minor repairs to influent channels and gates, installation of a new steel canopy, modifications to the existing odor control system, and associated electrical improvements.

CONTRACTOR DUTIES

a. Mobilization and demobilization.

b. Coordination and scheduling of work.

c. Maintenance of Traffic (pedestrian and vehicular)

d. Labor, materials, and equipment.

e. Tools, construction equipment, and fuel.

f. Electric, water and utilities required for construction.

g. Freight and sales tax.

h. Testing and laboratory services.

i. Surveying and field engineering.

j. Record Drawings in a format acceptable to the Engineer/Owner. Information will be used by the Engineer for any Permit Certification Requirements.

k. Compliance with all the conditions of the permits issued for this project.

l. Any other incidental labor, materials, and equipment required to construct the project.

m. Maintain an accurate record of communication and coordination with the owner for all scheduling, installation, and all other items.

WORK SEQUENCE

A. Sequence of work will be discussed with the Owner, Engineer, Contractor, and decided prior to the start of the project. The contractor shall proceed in a manner that is logical for the progression of work.

B. Certain areas may be assigned priority to accommodate Owner's needs.

C. Work shall only be performed during the authorized construction days/hours as specified by the City of Stuart.

CONTRACTORS RESPONSIBILITIES

1. Review and incorporate Owner-reviewed shop drawings, product data, and samples into the construction of the project.

2. Receive and unload products at site or off-site storage yard; inspect for completeness or damage jointly with Owner.

3. Repair or replace items damaged after receipt.

4. Arrange and pay for product delivery to site.

5. Handle, store, and install delivered products.

6. Submit claims for transportation damage and replace damaged, defective, or deficient items.

7. Arrange for manufacturers' warranties, inspections, and service.

CONTRACTOR'S USE OF THE PREMISES

A. All work shall be within the limits of the property as shown on the plans. Work beyond the limits of this project shall be coordinated closely with the City of Stuart during the construction.

B. Contractor shall be responsible for maintenance of traffic when working.

C. The contractor shall maintain vehicular and pedestrian access to the driveway entrances to the greatest extent practical. Exceptions will be made on a case by case basis to facilitate the work.

PERMITS REQUIRED

A. Contractor shall prepare, submit and obtain the appropriate permits from the City of Stuart.

B. Contractor shall prepare, submit, and obtain City of Stuart Building Department permits.

6. Pricing Proposal

BID SCHEDULE

Line Item	Description	Quantity	Unit of Measure	Unit Cost	Total
1	MOBILIZATION	1	LS		
2	GENERAL CONDITIONS	1	LS		
3	DEMOLITION	1	LS		
4	BYPASS SOLUTION	1	LS		
5	CLEAN FACILITY AND PERFORM FULL CONDITION ASSESSMENT	1	LS		
6	PERFORM STRUCTURAL REPAIRS (i.e., address rebar corrosion and concrete spalling)	1	LS		
6.1	CONCRETE SPALLING/EXPOSED REBAR REPAIR (TYPE 1)	20	SF		
6.2	CONCRETE SPALLING/EXPOSED REBAR REPAIR (TYPE 2)	45	SF		
6.3	CONCRETE SPALLING/EXPOSED REBAR REPAIR (TYPE 3)	25	SF		
7	REPAIR GATE ATTACHMENT	1	LS		
8	REMOVE AND REPLACE ROOF STRUCTURE	1	LS		
9	INSTALL PERMANENT GAURDRAIL	1	LS		
11	ODOR CONTROL MODIFICATIONS	1	LS		
12	ELECTRICAL AND I&C IMPROVEMENTS	1	LS		
TOTAL					

7. Vendor Questionnaire

7.1. Proposal Checklist

Please download the below documents, complete, and upload.

- Checklist.pdf

7.2. Certification*

The Respondent certifies that as a condition of bidding he will hold good his proposal prices for a minimum period of ninety (90) calendar days from the date proposals are opened.

The undersigned Respondent hereby certifies that the terms and conditions, including but not limited to, the scope of work have not been altered or modified in any manner. Any modification to this solicitation by the proposer will result in Proposer's response being found non-responsive and thereby disqualified.

The undersigned Respondent hereby certifies that he has received all the Addenda listed below and has incorporated them into his proposal listed herein. Failure to acknowledge any and all addenda may render the proposal non-responsive, and no further evaluation of the proposal will occur.

I do herby confirm the above information as valid and true:

☐ Please confirm

*Response required

7.3. Safety Standards Certification*

Please download the below documents, complete and have notarized. An online notarization option will be provided for you when responding.

- Safety Standards Certificat...

*Response required

7.4. References Form*

Please download the below documents, complete, and upload.

- Refernces Form.pdf

*Response required

7.5. Schedule of Subcontractors Participation *

Please download the below documents, complete, and upload.

- Schedule of Subcontractors ...

*Response required

7.6. Sworn Statement Pursuant to Section 287.133(3)(a)*

Please download the below documents, complete and have notarized. An online notarization option will be provided for you when responding.

- Sworn_Statement_Pursuant_to...

*Response required

7.7. Drug-Free Workplace Certification*

Please download the below documents, complete, and upload.

- Drug_Free_Work_Cert.pdf

*Response required

7.8. Public Entity Crimes*

Please download the below documents, complete, and upload.

- Public_Entitiy_Crimes_.pdf

*Response required

7.9. Suspended Vendor List*

City of Stuart, FL will verify that your company name is not on this list:

https://www.dms.myflorida.com/business_operations/state_purchasing/state_agency_resources/vendor_registration_and_vendor_lists/suspended_vendor_list

Please identify your legal company name here:

*Response required

7.10. Scrutinized List of Prohibited Companies List*

City of Stuart, FL will verify that your company name is not on this list:

https://www.dms.myflorida.com/business_operations/state_purchasing/state_agency_resources/vendor_registration_and_vendor_lists/suspended_vendor_list

Please identify your legal company name here:

*Response required

7.11. Do you affirm and represent that you are registered with E-Verify System and are using same, and will continue to use the same as required by Section 448.095, Florida Statute?*

By entering into a contract with the City of Stuart, you areobligated to comply with the provisions of Section 448.095, Fla. Stat., "Employment Eligibility." Further, by your entering into a contract, you affirm and represent that you are registered with the E-Verify system and are using same,and will continue to use same as required by Section 448.095, Fla. Stat.Compliance with Section 448.095, Fla. Stat., includes, but is not limited to,utilization of the E-Verify System

to verify the work authorization status of all newly hired employees, and requiring all subcontractors to provide an affidavit attesting that the subcontractor does not employ, contract with, or subcontract with, an unauthorized alien."
*Response required

7.12. Licenses and other documentation*

*Response required

City of Stuart
Procurement & Contracting Services Division
Alaina Knofla, Procurement Coordinator
121 SW Flagler Avenue, Stuart, FL 34994
(772) 288-5320

ADDENDA REPORT

ITB No. 2024-106

City of Stuart Water Reclamation Facility Headworks Rehab - Phase 1

RESPONSE DEADLINE: June 12, 2024 at 2:30 pm

Thursday, July 11, 2024

Addenda Issued:

Addendum #1
May 14, 2024 8:49 AM
Q. Is there an estimated cost of this project?

A. The estimated budget for this project is $1,000,000.00.

Addendum #2
Jun 3, 2024 7:32 AM
Q: Is it possible to provide pictures of the site/structures in color?

A: See attached.

Attachments:
- IMG_2015
- IMG_2019
- IMG_2014
- IMG_2018
- IMG_2017
- IMG_2016

Addendum #3
Jun 4, 2024 7:16 AM
Please use the See What Changed link to view all the changes made by this addendum.

Addendum #4
Jun 4, 2024 7:26 AM
Q: Can we have an estimate of Square footage or cubic feet of repairs that need to be done for the concrete repairs on this project?

A: Please see revised bid schedule. Section 1.03 C and its subparagraphs in their entirety from section 01220 does not apply within the specifications no longer applies.

Q: Can we have more detail on what's to be included in line item number 10? I don't see any Asphalt repairs needed. Is the new 8" x6" Curb to be included in this line item?

A: Please see the addendum for updated bid form. Regarding the curb, that should be included with the permanent guardrail line item as that is what it is associated with.

Addendum #5
Jun 10, 2024 8:48 AM
Q: Can we use a PBR (screw down) Roof Panel instead of the "Seamed Panels" in the specs and recommend it be a Galvalume Finish instead of the Painted PVDF finish the specs call out?

A: No, please provide what is depicted within the plans and specifications.

Q: Can you please provide pictures of the bar screen, grit removal equipment, and surrounding Interior area in color.

A: See attached.

Attachments:
- COS WRF Headworks (2)
- COS WRF Headworks (3)
- COS WRF Headworks (1)
- COS WRF Headworks (4)

Addenda Acknowledgements:

Addendum #1

Proposal	Confirmed	Confirmed At	Confirmed By
Razorback LLC	X	Jun 11, 2024 2:19 PM	Anthony Houllis
Lawrence Lee Construction Services, Inc.	X	Jun 7, 2024 9:07 AM	Geoffrey Schmidt

Addendum #2

Proposal	Confirmed	Confirmed At	Confirmed By
Razorback LLC	X	Jun 11, 2024 2:19 PM	Anthony Houllis
Lawrence Lee Construction Services, Inc.	X	Jun 7, 2024 9:07 AM	Geoffrey Schmidt

Addendum #3

Proposal	Confirmed	Confirmed At	Confirmed By
Razorback LLC	X	Jun 11, 2024 2:19 PM	Anthony Houllis
Lawrence Lee Construction Services, Inc.	X	Jun 7, 2024 9:07 AM	Geoffrey Schmidt

Addendum #4

Proposal	Confirmed	Confirmed At	Confirmed By

Razorback LLC	X	Jun 11, 2024 2:19 PM	Anthony Houllis
Lawrence Lee Construction Services, Inc.	X	Jun 7, 2024 9:07 AM	Geoffrey Schmidt

Addendum #5

Proposal	Confirmed	Confirmed At	Confirmed By
Razorback LLC	X	Jun 11, 2024 2:19 PM	Anthony Houllis
Lawrence Lee Construction Services, Inc.	X	Jun 10, 2024 9:35 AM	Geoffrey Schmidt

FLORIDA DEPARTMENT OF
Environmental Protection

Southeast District Office
3301 Gun Club Road, MSC 7210-1
West Palm Beach, Florida 33406-3007

Ron DeSantis
Governor

Jeanette Nuñez
Lt. Governor

Shawn Hamilton
Secretary

July 13, 2023

In the Matter of an
Application for Permit by:

City of Stuart
Peter Kunen, P.E., Utilities and
Engineering Director
121 SW Flagler Ave
Stuart, Florida 34994-2139
Email: pkunen@ci.stuart.fl.us

File Number: **FLA041459-014-DW1-MR**
Project Name: **Stuart WRF Headworks Rehabilitation – Phase 1**
Martin County
Stuart Water Reclamation Facility
Permit Number: FLA041459

NOTICE OF PERMIT REVISION

ISSUANCE DATE: **July 13, 2023**
EFFECTIVE DATE: **July 13, 2023**
EXPIRATION DATE: **June 5, 2026**

Dear Mr. Kunen:

The Department has reviewed your application received on June 8, 2023, to revise the existing Wastewater Permit Number FLA041459, issued on February 11, 2021, for the referenced facility modification. Based on the Final Design, prepared by Carollo Engineers, Inc., the Department hereby approves your request in accordance with Section 403.087, Florida Statutes.

Please note that the effective date of this permit is also the issuance date of this Notice, July 12, 2023.

Please note that the expiration date of this permit is not being revised. The expiration date remains June 5, 2026.

There are no changes to the existing discharge monitoring report (DMR).

The proposed modification includes the following:

- installation of a temporary headworks bypass system
- removal of the second-floor enclosed roof structure
- detailed structural condition assessment
- minor repairs to influent channels and gates
- installation of a new steel canopy
- modification to the existing odor control system
- associated electrical improvements.

At a minimum, the following facilities must be in service in order to proceed with a scheduled shutdown:

- Aeration basins
- Secondary sedimentation
- Filters
- UV disinfection
- Solids dewatering and hauling

No shutdown is allowed for the reuse water main.

Maximum facility flow work limitation: Activities disrupting plant operations are prohibited when flows are greater than 4 MGD.

The permit is modified as given below:

- **Add the section 3 to Part VI. Schedules:**

The headwork rehabilitation will be completed according to the following schedule:

ITEM NUMBER	Improvement Action	Date
a.	Start construction	November 1, 2023
b.	Complete construction	July 31, 2024
b.	Submit DEP Form Number 62-620.910(12), Notification of Completion of Construction for Wastewater Facilities or Activities (Revised 10/23/00) (You can find the form at Web Site: https://floridadep.gov/sites/default/files/62-620.910_12.pdf)	Prior to placing into service
c.	Submit DEP Form Number 62-620.910(13), Notification of Availability of Record Drawings and Final Operation and Maintenance Manuals (Revised 10/23/00) (You can find the form at Web Site: https://floridadep.gov/sites/default/files/62-620.910_13.pdf)	Within 6 months of submittal of the Notification of Completion

All other applicable conditions included in the original permit and other permit revisions remain unchanged. This Notice of Permit Revision shall become a part of the permit and shall be attached to the original permit.

The Department's proposed agency action shall become final unless a timely petition for an administrative hearing is filed under Sections 120.569 and 120.57, Florida Statutes, within fourteen days of receipt of notice. The procedures for petitioning for a hearing are set forth below.

A person whose substantial interests are affected by the Department's proposed permitting decision may petition for an administrative proceeding (hearing) under Sections 120.569 and 120.57, Florida Statutes. The petition must contain the information set forth below and must be filed (received by the clerk) in the Office of General Counsel of the Department at 3900 Commonwealth Boulevard, Mail Station 35, Tallahassee, Florida 32399-3000.

Under Rule 62-110.106(4), Florida Administrative Code, a person may request enlargement of the time for filing a petition for an administrative hearing. The request must be filed (received by the clerk) in the

Office of General Counsel before the end of the time period for filing a petition for an administrative hearing.

Petitions by the applicant or any of the persons listed below must be filed within fourteen days of receipt of this written notice. Petitions filed by any persons other than those entitled to written notice under Section 120.60(3), Florida Statutes, must be filed within fourteen days of publication of the notice or within fourteen days of receipt of the written notice, whichever occurs first. Under Section 120.60(3), Florida Statutes, however, any person who has asked the Department for notice of agency action may file a petition within fourteen days of receipt of such notice, regardless of the date of publication.

The petitioner shall mail a copy of the petition to the applicant at the address indicated above at the time of filing. The failure of any person to file a petition within fourteen days of receipt of notice shall constitute a waiver of that person's right to request an administrative determination (hearing) under Sections 120.569 and 120.57, Florida Statutes. Any subsequent intervention (in a proceeding initiated by another party) will be only at the discretion of the presiding officer upon the filing of a motion in compliance with Rule 28-106.205, Florida Administrative Code.

A petition that disputes the material facts on which the Department's action is based must contain the following information:

(a) The name, address, and telephone number of each petitioner; the name, address, and telephone number of the petitioner's representative, if any; the Department permit identification number and the county in which the subject matter or activity is located;
(b) A statement of how and when each petitioner received notice of the Department action;
(c) A statement of how each petitioner's substantial interests are affected by the Department action;
(d) A statement of all disputed issues of material fact. If there are none, the petition must so indicate;
(e) A statement of facts that the petitioner contends warrant reversal or modification of the Department action;
(f) A concise statement of the ultimate facts alleged, as well as the rules and statutes which entitle the petitioner to relief; and
(g) A statement of the relief sought by the petitioner, stating precisely the action that the petitioner wants the Department to take.

Because the administrative hearing process is designed to formulate final agency action, the filing of a petition means that the Department's final action may be different from the position taken by it in this notice. Persons whose substantial interests will be affected by any such final decision of the Department have the right to petition to become a party to the proceeding, in accordance with the requirements set forth above.

Mediation under Section 120.573, Florida Statutes, is not available for this proceeding.

This permit action is final and effective on the date filed with the clerk of the Department unless a petition is filed in accordance with the above. Upon the timely filing of a petition this permit will not be effective until further order of the Department.

Any party to the permit has the right to seek judicial review of the permit action under Section 120.68, Florida Statutes, by the filing of a notice of appeal under Rules 9.110 and 9.190, Florida Rules of Appellate Procedure, with the clerk of the Department in the Office of General Counsel, Mail Station 35, 3900 Commonwealth Boulevard, Tallahassee, Florida, 32399 3000; and by filing a copy of the notice of appeal accompanied by the applicable filing fees with the appropriate district court of appeal. The notice of

appeal must be filed within 30 days from the date when this permit action is filed with the clerk of the Department.

Executed in West Palm Beach, Florida.

STATE OF FLORIDA DEPARTMENT
OF ENVIRONMENTAL PROTECTION

July 13, 2023
Norva Blandin, MSEM Date
Permitting Program Administrator
Southeast District

NB/MD/ls: FLA041459-014-DW1-MR

CERTIFICATE OF SERVICE

The undersigned hereby certifies that this NOTICE OF PERMIT REVISION were emailed before the close of business on July 12, 2023 to the listed persons.

FDEP: Norva Blandin, Margie DeBerry, Lyudmila Sokolova, Bridjette Bucell
Peter Kunen, P.E., City of Stuary, pkunen@ci.stuart.fl.us
Brian Graham, P.E., Carollo Engineers, Inc., bgraham@carollo.com

FILING AND ACKNOWLEDGMENT

FILED, on this date, under Section 120.52, Florida Statutes, with the designated Deputy Clerk, receipt of which is hereby acknowledged.

Kameil Akbar 07.13.2023
Clerk Date

CITY OF STUART
STUART, FL

WATER RECLAMATION FACILITY HEADWORKS REHABILITATION
PHASE 1 DESIGN SERVICES

CLIENT PROJECT NO. 201076

TECHNICAL SPECIFICATIONS

BID SET SUBMITTAL

VOLUME 1 OF 1

MARCH 2024

CITY OF STUART
STUART, FL

WATER RECLAMATION FACILITY HEADWORKS REHABILITATION
PHASE 1 DESIGN SERVICES

CLIENT PROJECT NO. 201076

BID SET SUBMITTAL
MARCH 2024

Brian J. Graham
FL PE No. 44683

Carollo Engineers, Inc.
2056 Vista Parkway, Suite 150
West Palm Beach, Florida 33411
P. 561.868.6400
F. 561.868.6401



CITY OF STUART
STUART, FL

WATER RECLAMATION FACILITY HEADWORKS REHABILITATION
PHASE 1 DESIGN SERVICES

CLIENT PROJECT NO. 201076

BID SET SUBMITTAL

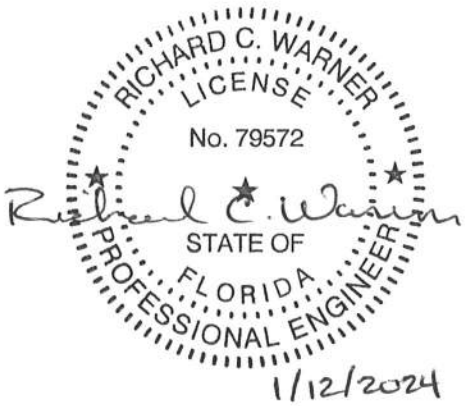

Richard C. Warner
PE No. 79572

Carollo Engineers, Inc.
2056 Vista Parkway, Suite 150
West Palm Beach, Florida 33411
P. 561.868.6400
F. 561.868.6401

CITY OF STUART
STUART, FL

WATER RECLAMATION FACILITY HEADWORKS REHABILITATION
PHASE 1 DESIGN SERVICES

CLIENT PROJECT NO. 201076

BID SET SUBMITTAL
MARCH 2024



Aleksandar D. Stojanovic
FL PE No. 60269

ADS Engineering, PLLC
4701 N Federal Highway, Suite 390
Pompano Beach, Florida 33064
P. 954.415.7378

CITY OF STUART

WATER RECLAMATION FACILITY HEADWORKS REHABILITATION
PHASE 1 DESIGN SERVICESTABLE OF CONTENTS

VOLUME 1 OF 1

DIVISION 01 – GENERAL REQUIREMENTS

SECTION NO.	TITLE	RESPONSIBLE ENGINEER
01110	SUMMARY OF WORK	BRIAN GRAHAM
01140	WORK RESTRICTIONS	BRIAN GRAHAM
01220	MEASUREMENT AND PAYMENT	BRIAN GRAHAM
01292	SCHEDULE OF VALUES	BRIAN GRAHAM
01312	PROJECT MEETINGS	BRIAN GRAHAM
01321	SCHEDULES AND REPORTS	BRIAN GRAHAM
01330	SUBMITTAL PROCEDURES	BRIAN GRAHAM
01357	DELEGATED DESIGN PROCEDURES	BRIAN GRAHAM
01410	REGULATORY REQUIREMENTS	BRIAN GRAHAM
01450	QUALITY CONTROL	BRIAN GRAHAM
01455	REGULATORY QUALITY ASSURANCE	BRIAN GRAHAM
01500	TEMPORARY FACILITIES AND CONTROLS	BRIAN GRAHAM
01600	PRODUCT REQUIREMENTS	BRIAN GRAHAM
01722	FIELD ENGINEERING	BRIAN GRAHAM
01738	SELECTIVE ALTERATIONS AND DEMOLITION	BRIAN GRAHAM
01756	COMMISSIONING	BRIAN GRAHAM
01770	CLOSEOUT PROCEDURES	BRIAN GRAHAM
01782	OPERATION AND MAINTENANCE MANUALS	BRIAN GRAHAM
01850	DESIGN CRITERIA	BRIAN GRAHAM

DIVISION 02 - SITE CONSTRUCTION

SECTION NO.	TITLE	RESPONSIBLE ENGINEER
02050	SOILS AND AGGREGATES FOR EARTHWORK	BRIAN GRAHAM
02300	EARTHWORK	BRIAN GRAHAM
02312	CONTROLLED LOW STRENGTH MATERIAL (CLSM)	BRIAN GRAHAM
02952	PAVEMENT RESTORATION AND REHABILITATION	BRIAN GRAHAM

DIVISION 03 - CONCRETE

SECTION NO.	TITLE	RESPONSIBLE ENGINEER
03055	ADHESIVE-BONDED REINFORCING BARS AND ALL THREAD RODS IN CONCRETE	RICH WARNER
03071	EPOXIES	RICH WARNER
03926	STRUCTURAL CONCRETE REPAIR	RICH WARNER

DIVISION 05 - METALS

SECTION NO.	TITLE	RESPONSIBLE ENGINEER
05190	MECHANICAL ANCHORING AND FASTENING TO CONCRETE AND MASONRY	RICH WARNER
05500	METAL FABRICATIONS	RICH WARNER

DIVISION 06 - WOOD AND PLASTICS

SECTION NO.	TITLE	RESPONSIBLE ENGINEER
06608	FIBERGLASS REINFORCED PLASTIC	BRIAN GRAHAM

DIVISION 09 - FINISHES

SECTION NO.	TITLE	RESPONSIBLE ENGINEER
09960	HIGH-PERFORMANCE COATINGS	BRIAN GRAHAM

DIVISION 11 - EQUIPMENT

SECTION NO.	TITLE	RESPONSIBLE ENGINEER
11395A	PACKAGED ODOR SCRUBBING SYSTEM	BRIAN GRAHAM

DIVISION 13 - SPECIAL CONSTRUCTION

SECTION NO.	TITLE	RESPONSIBLE ENGINEER
13122	METAL BUILDING SYSTEMS	RICH WARNER

DIVISION 15 - MECHANICAL

SECTION NO.	TITLE	RESPONSIBLE ENGINEER
15052	COMMON WORK RESULTS FOR GENERAL PIPING	BRIAN GRAHAM
15061	PIPE SUPPORTS	BRIAN GRAHAM
15110	COMMON WORK RESULTS FOR VALVES	BRIAN GRAHAM
15116	PLUG VALVES	BRIAN GRAHAM
15121	PIPE COUPLINGS	BRIAN GRAHAM
15211	DUCTILE IRON PIPE: AWWA C151	BRIAN GRAHAM
15241	HIGH DENSITY POLYETHYLENE (HDPE) PIPE: AWWA C906	BRIAN GRAHAM
15249	POLYVINYL CHLORIDE (PVC) PIPE: SCHEDULE TYPE	BRIAN GRAHAM
15814	FIBERGLASS REINFORCED PLASTIC DUCTS	BRIAN GRAHAM
15956	PIPING SYSTEMS TESTING	BRIAN GRAHAM

DIVISION 16 - ELECTRICAL

SECTION NO.	TITLE	RESPONSIBLE ENGINEER
16010	BASIC ELECTRICAL REQUIREMENTS	ALEKSANDAR D. STOJANOVIC
16050	BASIC ELECTRICAL MATERIALS AND METHODS	ALEKSANDAR D. STOJANOVIC
16110	RACEWAYS	ALEKSANDAR D. STOJANOVIC
16120	CONDUCTORS	ALEKSANDAR D. STOJANOVIC
16450	GROUNDING	ALEKSANDAR D. STOJANOVIC
16670	LIGHTNING PROTECTION SYSTEM	ALEKSANDAR D. STOJANOVIC
16950	ELECTRICAL TESTING	ALEKSANDAR D. STOJANOVIC

DIVISION 17 - INSTRUMENTATION AND CONTROLS

SECTION NO.	TITLE	RESPONSIBLE ENGINEER
17306	FLOW MEASUREMENT: ULTRASONIC DOPPLER	BRIAN GRAHAM

SECTION 01110

SUMMARY OF WORK

PART 1 GENERAL

1.01 SUMMARY

A. Section includes: Detailed description of the Work.

1.02 THE WORK

A. The Work consists of rehabilitation of The City of Stuart Water Reclamation Facility headworks structure, including installation of a temporary headworks bypass system, removal of the second floor enclosed roof structure, detailed structural condition assessment and minor repairs to influent channels and gates, installation of a new steel canopy, modifications to the existing odor control system, and associated electrical improvements.

1.03 LOCATION OF PROJECT

A. The Work is located at 301 SE Stypmann Blvd, Stuart, FL, 34994.

B. Owner will:
   1. Arrange for and deliver necessary shop drawings, product data, and samples to Contractor.
   2. Arrange and pay for product delivery to site in accordance with construction schedule.
   3. Deliver supplier's bill of materials to Contractor.
   4. Inspect deliveries jointly with Contractor.
   5. Submit claims for transportation damage.
   6. Arrange for replacement of damaged, defective, or missing items.
   7. Arrange for manufacturer's warranties, bonds, service, and inspections.

C. Contractor's responsibility for Owner-furnished products:
   1. Designating delivery date for each Owner-furnished product.
   2. Reviewing shop drawings, product data, and samples.
   3. Submitting notification of discrepancies or anticipated problems.
   4. Receiving and unloading products at site.
   5. Promptly inspecting products jointly with Owner and recording shortages, and damaged or defective items.
   6. Handling products at site, including uncrating and storage.
   7. Protecting products from damage.
   8. Installing, including assembly, connections, adjustments, and commissioning in accordance with Contract Documents.
   9. Providing operating oils, lubricants, and incidental materials required for complete installation.
   10. Repairing or replacing items damaged after receipt until date of Substantial Completion of the Work by Owner.

1.04 COORDINATION OF WORK

A. Prior to Prior to construction, the Contractor shall verify existing utilities identified on the Drawings. The utility verifications consist of excavation to verify tie-in points and to locate potential conflicts that may affect the work as shown on the Drawings. The Contractor will be responsible for the coordination of this work with the associated utility Owner's and permitting agencies having jurisdiction over the specified locations to be verified.

B. Maintain overall coordination of the Work.

C. Obtain construction schedules from each subcontractor, and require each subcontractor to maintain schedules and coordinate modifications.

D. The Contractor shall video record the project sites including all concrete and asphalt pavements, curb and gutter, structures to be demolished, and existing structures and facilities that are to be modified. The original and two copies of the DVD shall be turned over to the Engineer and Owner prior to beginning construction activities. The video shall clearly identify existing site and structural conditions prior to construction.

PART 2 PRODUCTS (NOT USED)

PART 3 EXECUTION (NOT USED)

END OF SECTION

SECTION 01140

WORK RESTRICTIONS

PART 1 GENERAL

1.01 SUMMARY

A. Section includes: Requirements for sequencing and scheduling the Work affected by existing site and facility, work restrictions, and coordination between construction operations and plant operations.

1.02 SUBMITTALS

A. Baseline Schedule with Method of Procedure (MOP) tasks.

B. Method of Procedure (MOP) Form.

C. Method of Procedure (MOP) Log.

D. Progress Schedule with MOP tasks.

1.03 METHOD OF PROCEDURE (MOP)

A. Comply with MOP Instructions as specified in Attachment A - Method of Procedure (MOP).

B. Prepare MOP for the following conditions:
   1. Shutdowns, diversions, and tie-ins to the existing facility.
   2. Process start-up activities.
   3. Power interruption and tie-ins.
   4. Switch over between temporary and permanent facilities, equipment, piping, and electrical and instrumentation systems.
   5. Process constraints requiring interruption of operating processes or utilities.

C. Other Work not specifically listed may require MOPs as determined necessary by the Contractor, Owner, or Engineer.

D. Submit Baseline Schedule, as specified in Section 01321 - Schedules and Reports with proposed MOPs.

E. Submit MOP Log at construction progress meetings.

F. No consideration will be given to claims of additional time and cost associated to preparing MOPs required by the Owner and Engineer to complete this work in a manner that facilitates proper operation of the facility and compliance with effluent discharge criteria.

G. Where required to minimize treatment process interruptions while complying with specified constraints, provide temporary pumping, power, lighting, controls, instrumentation, and safety devices.

1.04 GENERAL CONSTRAINTS ON WORK AND SCHEDULING OF WORK

A. Plant access for Contractor will be provided at the gate.

B. Perform abandoned pipe Work as specified in Section 01738 - Selective Alterations and Demolition.

C. Wastewater projects:
   1. The Stuart Water Reclamation Facility is the City's only means of treating domestic and industrial wastewater prior to discharging to either public access reuse or to an underground injection well. Impairing the operational capabilities of this treatment plant will result in serious environmental damage and monetary fines.
   2. Conduct Work in a manner that will not impair the operational capabilities of essential elements of the treatment process or reduce the capacity of the entire treatment plant below levels sufficient to treat the quality of raw wastewater to the water quality limitations specified in the discharge permit.
   3. Conduct commissioning activities as specified in Section 01756 - Commissioning in a manner that will not impair the operational capabilities of essential elements of the treatment process or reduce the capacity of the entire treatment plant below levels sufficient to treat the quality of raw wastewater to the water quality limitations specified in the discharge permit.

D. The status of the treatment plant shall be defined as "operational" when it is capable of treating the entire quantity of wastewater received to the water quality limits specified in the discharge permit.

1.05 COMPLIANCE WITH NATIONAL POLLUTANT DISCHARGE ELIMINATION SYSTEM

A. The existing facility is operating under the terms of a National Pollutant Discharge Elimination System permit issued by the Southeast District Office of the FDEP.
   1. This permit specifies the water quality limits that the plant must meet prior to discharge of effluent.
   2. A copy of the existing permit is on file by the Owner and is available upon request.

B. Perform work in a manner that will not prevent the existing facility from achieving the finished water quality requirements established by regulations.

C. Bear the cost of penalties imposed on the Owner for discharge violations caused by actions of the Contractor.

D. Conduct the Work and provide temporary facilities required to keep the existing plant continuously operational.

E. Do not remove or demolish existing facilities required to keep the existing plant operational at the capacities specified until the existing facilities are replaced by temporary, new, or upgraded facilities or equipment.
   1. Test replacement facilities to demonstrate operational success prior to removing or demolishing existing facilities.

1.06 UTILITIES

A. Provide advance notice to and utilize services of Sunshine 811 for location and marking of underground utilities operated by utility agencies other than the Owner.

B. Maintain electrical, telephone, water, gas, sanitary facilities, and other utilities within existing facilities in service. Provide temporary utilities when necessary.

C. New yard utilities were designed using existing facility drawings.
   1. Field verification of utilities locations was not performed during design.
   2. Services crossed or located nearby by new yard utilities may require relocation and possible shutdowns.
   3. Pipe alignments as indicated on the Drawings.

1.07 WORK BY OTHERS

A. Where proper execution of the Work depends upon work by others, inspect and promptly report discrepancies and defects.

1.08 SHUTDOWN CONSTRAINTS

A. General shutdown constraints:
   1. Execute the Work while the existing facility is in operation.
   2. Some activities may be accomplished without a shutdown.
   3. Apply to activities of construction regardless of process or work area.
   4. Activities that disrupt plant or utilities operations must comply with these shutdown constraints.
   5. Organize work to be completed in a minimum number of shutdowns.
   6. Provide thorough advanced planning, including having required equipment, materials, and labor on hand at time of shutdown.
   7. Shutdown MOPs:
      a. Advise the Engineer a minimum of 3 weeks prior to need for any complete or partial plant shutdown for tie-ins.
      b. Prepare and submit MOP to Engineer for any complete or partial plant shutdown required a minimum of 2 weeks prior to the shutdown.
      c. Owner's written approval of MOP is required prior to beginning Work.
   8. Where required to minimize treatment process interruptions while complying with specified constraints, provide temporary pumping, power, lighting, controls, instrumentation, and safety devices.
   9. Final determination of the permitting of shutdowns will be the sole judgment of the Owner.
   10. Owner maintains the ability to abort on the day of the scheduled shutdown.
   11. Unplanned shutdowns due to emergencies are not specified in this Section.

B. Unit process availability work limitations:
   1. Shutdowns and tie-ins or other activities that disrupt plant operations are prohibited unless the following unit process availability conditions exist and unless otherwise approved in writing by the Owner and Engineer.
   2. At a minimum, the following facilities must be in service in order to proceed with a scheduled shutdown.
      a. Aeration basins.
      b. Secondary sedimentation.

c. Filters.
d. UV disinfection.
e. Existing solids dewatering and hauling.

C. Process, electrical and instrumentation - tie-in shutdowns:
1. Schedule no more than 1 tie-in shutdown per day.

D. Reuse water main.
1. No shutdown is allowed.

1.09 WORK RESTRICTIONS

A. Maximum plant flow work limitation:
1. Activities that disrupt plant operations are prohibited during the following flow conditions, unless otherwise approved in writing by the Owner and Engineer.
a. Flow condition: Flow above 4.0 million gallons per day.

B. Modified odor control facility:
1. Successful completion of functional testing of modified odor control facility prior to process operational period.

C. Yard piping, electrical duct banks, and trenches:
1. Provide continuous access to existing dewatering dumpsters and dumpster at headworks.
2. Provide 1 open fire lane, designed for H-20 loadings, at all times during construction.

D. Provide safe, continuous access to process control equipment for plant operations and maintenance personnel.

E. Maintain truck access to the existing headworks bins.

F. Piping:
1. Provide temporary piping during construction for existing and new equipment to maintain plant operation in service during construction.

PART 2 PRODUCTS (NOT USED)

PART 3 EXECUTION (NOT USED)

END OF SECTION

ATTACHMENT A - METHOD OF PROCEDURE (MOP)

“METHOD OF PROCEDURE” (MOP)
Instructions and Forms

Definition and Purpose

“Method of Procedure” (MOP) is a detailed document submitted by the Contractor to request process shutdown(s), utility tie-in(s), work in areas that may risk unanticipated outages, or flow diversions to accommodate site construction activities during a project. Such activities may include (but are not limited to) new tie-ins to utilities or structures, mechanical modifications to process piping or equipment, demolition, bulkhead installation, and cleaning processes.

The MOP provides a detailed plan to the Owner and Engineer that describes specific aspects of the work including purpose, time of execution, and anticipated impacts on treatment processes. The MOP also includes contingency measures and provisions for rapid closure in the event that shutdown or work progress difficulties are encountered. Information from relevant trades associated with the requested shutdown, diversion, or tie-in is also included.

The Owner should use the information within the MOP to define operational procedures and methods to safely and successfully assist the Contractor.

MOP Process Summary

WHO	STEP	TIMING
Contractor	1. Identify MOPs needed on MOP Log and Baseline Schedule.	No later than 7 days prior to Preconstruction Scheduling Meeting
Contractor, Owner, Engineer	2. Pre-MOP Meeting.	More than 28 days prior to work
Contractor	3. Submits MOP.	No later than 28 days prior to work
Owner	4. Reviews MOP.	
Owner	5. MOP finalized.	No later than 7 days prior to work
Contractor	6. Complete Work.	
Contractor	7. Update MOP Log and Progress Schedules.	Monthly

MOP Process Detail

STEP 1. Identifies MOPs needed on MOP Log and Baseline Schedule.

Contractor submits a preliminary list of anticipated project MOPs on MOP Log. MOPs identified but not limited to those shutdowns, diversions, or tie-ins described in the Contract Documents. Incorporate MOPs as tasks in Baseline Schedule. Date scheduled MOPs to coincide with the appropriate construction activities.

STEP 2. Pre-MOP Meeting.

Contractor requests a Pre-MOP Meeting with the Owner and Engineer to discuss the nature of the shutdown, diversion, or tie-in, and to gather the information necessary to complete the MOP Form. The pre-MOP meeting may be waived by the Owner or Engineer if the work is deemed to be minor.

STEP 3. Submits MOP.

Contractor completes the MOP Form and submit 3 copies for approval to the Owner's Project Manager (OPM).

STEP 4. Reviews MOP.

OPM distributes MOP Form for review by the Owner's Construction Coordinator, O&M Representative, and Engineer's Project Representative. Review MOP Form for completeness, accuracy, compliance with both the construction schedule, constraints defined in contract documents, and to ensure that the requested work does not negatively impact plant operations or other concurrent project activities. Additional information may be requested to better understand the nature of and method for completing the Work.

STEP 5. MOP finalized.

Once the MOP is agreed to by all parties, the MOP will be finalized by signature. Copies are distributed to the Owner, Engineer, and Contractor.

STEP 6. Complete work.

Contractor complete work.

STEP 7. Update MOP Log and Progress Schedules.

Contractor updates MOP Log weekly and distributes at the regularly scheduled construction progress meetings.

METHOD OF PROCEDURE (MOP) FORM

Owner:		**Date:**	
Contractor:		**Carollo Project No.:**	
Project Name:		**Submittal No.:**	
Submittal Title:		**Spec/Dwg. Reference:**	

MOP #	Task Title *(Provide <10 word title)*:	Submittal Date: *(No later than 28 days prior to work)*

SCHEDULE OF WORK ACTIVITY START: *(Date/Time)* END: (Date/Time)

REQUESTOR:

PRIMARY POINT OF CONTACT:	PHONE/PAGER:
SECONDARY POINT OF CONTACT:	PHONE/PAGER:

NOTIFY	☐	Control Room, Phone	☐	Security, Phone	

BUILDING:	LOCATION OF WORK FLOOR/LEVEL:

DESCRIPTION OF WORK: *(Provide sufficient details on process isolation, work sequencing, and safety (i.e., control of significant hazards unique to the work) to demonstrate an understanding of the work and how it will be completed within the constraints, and its impact on the processes and facility.)*

Task Summary: _____

Processes Affected: _____

Trades Affected: _____

WORK PLAN:

Work Sequencing: _____

Process Isolation: _____

Spill Prevention Plan: _____

Contingency Plans: _____

CRITICAL EQUIPMENT/TOOLS: *(pumps and discharge hoses with correct fittings, blind flanges and pipe plugs, no-hub fittings, properly sized electrical service components, generators, portable lighting, chlorine for potable water pipe breaks, etc.)*

☐	Acoustic Ceiling/or Walls Access	☐	Excavation Permit	☐	Lock Out/Tag Out
☐	Chemical Use Approval	☐	Fire Sprinkler Impairment	☐	Life Safety Systems
☐	Confined Space Permit	☐	Flammable Materials	☐	Roof Protocol
☐	Critical Lift Plan	☐	Flush / Discharge	☐	Work After Dark
☐	Energized Electrical Work	☐	High Pressure Test	☐	
☐	Elect. Panel Schedules	☐	Hot Work/Open Flame	☐	

EXISTING SERVICE(S) AT RISK:

☐	Breathing Air	☐	Elect Normal	☐	Process Access	☐	Telephones
☐	Chemical Distribution	☐	Fire Protection	☐	Safety Showers	☐	UPS
☐	City Water	☐	HVAC	☐	SCADA	☐	VAX/DATA
☐	Communication	☐	Inert Gas	☐	Security	☐	
☐	Domestic Drain	☐	Instrument - Air	☐	Solvent Drain	☐	
☐	Elect-Bus Duct	☐	Life Safety System	☐	Specialty Gases	☐	
☐	Elect Emergency	☐	Natural Gas	☐	Storm Drain	☐	

REVIEWER'S INSTRUCTIONS / COMMENTS:				
☐ PREJOB BRIEFING MUST BE COMPLETED PRIOR TO COMMENCING WORK:				
	Full Name (printed)	**Signature**	**Phone**	**Date**
Submitted By				
System Owner				
Reviewer (if needed)				
Reviewer (if needed)				
Reviewer (if needed)				
Reviewer (if needed)				

METHOD OF PROCEDURE (MOP) LOG
Sample

MOP Number	Task Title	Date Requested	Date Approved	Date Work Planned	Work Completed (yes/no)
001					
002					
003					

SECTION 01220

MEASUREMENT AND PAYMENT

PART 1 GENERAL

1.01 SUMMARY

A. Section includes: Procedures for measurement and payment of Work under this Contract for lump sum items and unit prices.

1.02 REFERENCES

A. Occupational Safety and Health Administration (OSHA).

1.03 UNIT PRICE ITEMS

A. Measurement of quantities:
   1. Work paid at a unit price times number of units measured will be measured by Engineer in accordance with United States Standard Measures:
      a. 1 ton shall consist of 2,000 pounds avoirdupois.
   2. Provide and pay for accurate scales:
      a. Use platform scales of sufficient size and capacity to permit the entire vehicle or combination of vehicles to rest on the scale platform while being weighed.
      b. Combination vehicles may be weighed as separate units provided they are disconnected while being weighed.
      c. Have scales inspected and certified as often as necessary to ascertain accuracy.
      d. Furnish weigh slips and daily summary weigh sheets to Engineer.
      e. When material is shipped by rail, certified car weights will be acceptable, provided that not more than the actual weight of material will be paid, without consideration of minimum car weight used for assessing freight tariff:
      f. Car weight will not be acceptable for materials passing through mixing plants.
      g. Daily, or at shorter intervals when necessary to ensure accuracy, weigh empty trucks used to haul material paid by weight:
      h. Provide such trucks with plain, unique, permanent, legible identification marks.
   3. Reinforcing steel, steel shapes, castings, and similar items paid by weight will be measured by handbook weights for the type and quantity indicated for the Work.

B. Item 1: Concrete Spalling/Exposed Rebar Repair:
   1. Description:
      a. Concrete spalling and exposed rebar may be found in the channels of the headworks (walls, floors, underside of slabs) once it becomes available to inspect. Areas of corroded concrete and rebar are subject to repair as they will lead to further corrosion and damage.
      b. Measurement for payment shall be based on square footage with an estimated average repair thickness of 2 inches.
   2. Payment:
      a. The unit price shall include all CONTRACTORS permits, bonds, insurance, taxes, materials, labor, equipment, other incidentals necessary to perform the described repairs in accordance with Section 03926. The quantity shall be estimated upon inspection and agreed upon by the OWNER and ENGINEER prior to commencement of the repair work.

C. Item 2: Pavement Replacement:
   1. Measurement:
      a. Includes work for pavement replacement, and other appurtenant work and materials.
      b. Measurement for payment shall be cubic yard (C.Y.).
   2. Payment:
      a. Unit price.

PART 2 PRODUCTS (NOT USED)

PART 3 EXECUTION (NOT USED)

END OF SECTION

SECTION 01292

SCHEDULE OF VALUES

PART 1 GENERAL

1.01 SUMMARY

A. Section includes: Requirements for preparation, format, and submittal of Schedule of Values.

1.02 PREPARATION

A. Schedule of Values shall be a listing of all cost loaded, on-site construction activities from the progress schedule, listed in numerical order, showing that the sum total of all cost-loaded activities equal the Contract value.

B. When the schedule is changed or revised to include added or deleted work, the Schedule of Values shall also be revised such that the sum total of all cost-loaded activities continuously equal the current Contract value.
   1. Equate the aggregate of these costs to the Lump Sum Contract Price.

C. Prepare Schedule of Values identifying costs of Major Items of Work, including:
   1. Mobilization.
   2. Demobilization.
   3. Bypass Yard Piping.
   4. Demolition.
   5. Pre-Engineered Metal Building (PEMB) Installation.
   6. Structural Condition Assessment and Repairs.
   7. Odor Control Improvements.
   8. Electrical.
   9. Commissioning.

D. Assign prices to Major Items of Work which aggregate the Contract Price. Base prices on costs associated with scheduled activities based on the Project Schedule for each Major Item of Work.

1.03 SUBMITTALS

A. Submit Schedule of Values for the Preliminary Schedule as specified in, Section 01321 - Schedules and Reports.

B. Submit corrected schedule of values within 10 days upon receipt of reviewed Schedule of Values.

C. Schedule of values shall be consistent with the bid summary sheet.

D. Upon request, support prices with data which will substantiate the correctness.

E. Submit List of Subcontractors and Material Suppliers on the project.

PART 2 PRODUCTS (NOT USED)

PART 3 EXECUTION (NOT USED)

END OF SECTION

SECTION 01312

PROJECT MEETINGS

PART 1 GENERAL

1.01 SUMMARY

A. Section includes: Requirements for conducting conferences and meetings for the purposes of addressing issues related to the Work, reviewing and coordinating progress of the Work and other matters of common interest, and includes the following:
   1. Qualifications of Meeting Participants.
   2. Basic Meeting Requirements
   3. Pre-construction Conference.
   4. Pre-construction Safety Conference.
   5. Pre-submittal Conference.
   6. Web Based Construction Document Management Software Training.
   7. Progress Meetings.
   8. Schedule Update Meetings.
   9. Quality Control Meetings.
   10. Pre-Installation Meetings.
   11. Maintenance Of Plant Operations (MOPO) Meetings.
   12. Commissioning Coordination Meetings.
   13. Instrumentation and Control Coordination Meetings.
   14. Close-out Meeting.
   15. Post Construction Meeting.

1.02 QUALIFICATIONS OF MEETING PARTICIPANTS

A. Representatives of entities participating in meetings shall be qualified and authorized to act on behalf of entity each represents.

B. The Contractor shall provide a Project Superintendent and a dedicated Project Manager specific to this Project as a supervisor to oversee proper performance of the work. The Project Manager shall attend all meetings and have the authority to make decisions on behalf of the Contractor. The Project Manager shall be in attendance at the site at a minimum of once a day to evaluate the construction and to prepare a daily job report. The Project Manager shall be responsible for all coordination, document handling, submittal review and processing, quality control, and project scheduling. The Project Manager, once approved by the Owner and Engineer shall not be replaced without prior consent by the Owner and Engineer.
   1. The Project Superintendent and Project Manager shall be a direct employee of the Contractor.

C. The Project Superintendent and Project Manager shall fluently speak, read, and write in English.

1.03 PROJECT KICKOFF MEETING

A. Upon issuance of Notice to Proceed, or earlier when mutually agreeable, Engineer will arrange kickoff meeting at a location specified by the Owner.

B. Attending Kickoff Meeting: Contractor's superintendent, Owner, Engineer, representatives of utilities, major subcontractors and others involved in performance of the Work, and others necessary to agenda.

C. Engineer will preside at conference.

D. Purpose of Kickoff Meeting: To establish working understanding between parties and to discuss Construction Schedule, shop drawing and other submittals, permits, cost breakdown of major lump sum items, processing of submittals and applications for payment, and other subjects pertinent to execution of the Work.

E. Agenda will include:
   1. Adequacy of distribution of Contract Documents.
   2. Distribution and discussion of list of major subcontractors and suppliers.
   3. Proposed progress schedules and critical construction sequencing.
   4. Major equipment deliveries and priorities.
   5. Project coordination.
   6. Designation of responsible personnel.
   7. Procedures and processing of:
      a. Field decisions.
      b. Proposal requests.
      c. Submittals.
      d. Change Orders.
      e. Applications for Payment.
      f. Record Documents.
   8. Use of premises:
      a. Office, construction, and storage areas.
      b. Owner's requirements.
   9. Construction facilities, controls, and construction aids.
   10. Temporary utilities.
   11. Safety and first aid procedures.
   12. Security procedures (including hurricane preparedness).
   13. Housekeeping procedures.

F. Engineer will record minutes of meeting and distribute copies of minutes within seven (7) days of meeting to participants and interested parties.

1.04 PRE-CONSTRUCTION CONFERENCE

A. Engineer leads the meeting.

B. Timing:
   1. Upon issuance of Notice to Proceed, or earlier when mutually agreeable.

C. Attendees:
   1. Contractor's project manager and superintendent, Owner, Engineer, representatives of utilities, major subcontractors and others involved in performance of the Work, and others necessary to agenda.

D. Agenda minimum requirements:
   1. Meeting purpose:
      a. To establish working understanding between parties and to discuss Construction Schedule, shop drawing and other submittals, cost breakdown of major lump sum items, processing of submittals and applications for payment, and other subjects pertinent to execution of the Work.
   2. Review minutes of previous meeting.
   3. Distribution and discussion of list of major subcontractors and suppliers.
   4. Proposed progress schedules and critical construction sequencing.
   5. Major equipment deliveries and priorities.
   6. Project coordination.
   7. Designation of responsible personnel.
   8. Procedures and processing of:
      a. Field decisions.
      b. Proposal requests.
      c. Submittals - separate, meeting.
      d. Change Orders.
      e. Request for Information/Interpretations.
      f. Applications for Payment.
      g. Record Documents.
   9. Use of premises:
      a. Office, construction, and storage areas.
      b. Owner's requirements.
   10. Construction facilities, controls, and construction aids.
   11. Temporary utilities.
   12. Safety and first aid procedures.
   13. Security procedures.
   14. Housekeeping procedures.
   15. Safety and security.
   16. Review proposed photographer submittal.
   17. Action items.
   18. Next meeting.

1.05 PROGRESS MEETINGS

A. Engineer will lead the meeting.

B. Timing:
   1. Hold meetings throughout progress of the Work at maximum weekly intervals.

C. Attendees:
   1. Owner, Engineer, Contractor, Contractor’s Project Manager, superintendent, quality control manager, project scheduler, major subcontractors and suppliers as appropriate to agenda topics for each meeting.

2. Additional invitees:
    a. Owner utility companies when the Work affects their interests, and others necessary to agenda.

D. Agenda minimum requirements:
1. Meeting purpose:
    a. To discuss project progress.
2. Review minutes of previous meeting.
3. Safety and security.
4. Construction schedule summary.
5. Review of 6 weeks schedule.
    a. Contractor shall provide printed hard copies for each attendee.
6. Review of off-site fabrication and delivery schedules.
7. Review of submittals schedule and status of submittals.
8. Request for information (RFI's) status.
9. MOP's/shutdown coordination.
10. Change order management status.
11. Maintenance of quality standards (QA/QC).
12. Field observations, problems, and conflicts.
13. Commissioning.
14. General Items.
15. Action items.
16. Next meeting.

1.06 PRE-INSTALLATION MEETINGS

A. When required in individual specification sections or requested by Engineer, convene pre-installation meeting at Project site before commencing work of specific section.

B. Require attendance of parties directly affecting, or affected by, Work of specific section.

C. Notify Engineer 7 calendar days in advance of meeting date.

D. Prepare agenda and preside at meeting:
1. Review conditions of installation, preparation and installation procedures.
2. Review coordination with related work.

E. Contractor will record minutes and distribute electronic copies within 7 calendar days after meeting to participants, with copies to Engineer, Owner, and those affected by decisions made.

1.07 SCHEDULE UPDATE MEETINGS

A. Engineer will schedule meetings throughout progress of the Work at maximum monthly intervals.

B. Engineer will make arrangements for meetings; Contractor will prepare agenda with copies for participants, and preside at meetings.

C. Attendance required: Owner, Engineer, Contractor, Contractor's Project Manager, General Superintendent, project scheduler, major subcontractors and suppliers as appropriate to agenda topics for each meetings. Invite owner utility companies when the Work affects their interests, and others necessary to the agenda.

D. Agenda:
   1. Review Monthly Schedule, (Actual Progress and Variance).
      a. "Activities Started/Completed" this period.
      b. "Activities Started/Completed" "Variance" Baseline vs. current.
      c. "Added/Deleted Activities".
      d. "Revised Activity Descriptions".
      e. Any significant Proposed Logic Changes.
   2. Review milestone "Substantial Completion" Schedule.
      a. "Critical" Activities – "Critical Area, Float and Vital Statistics".
   3. Review "Cumulative and Monthly Costs" graph.
   4. Review "Budgeted Cost" indicating the Current Project Budgeted Cost.

E. Contractor will record changes for update and distribute electronic copies within 7 calendar days after meeting to participants and interested parties.

1.08 CLOSE-OUT MEETING

A. Engineer will schedule close-out meeting.

B. Engineer will make arrangements for meeting, prepare agenda with copies for participants, and preside at meeting.

C. Attendance required: Owner, Engineer, Contractor, Contractor's Project Manager, Superintendent.

D. Agenda:
   1. Review punchlist completion.
   2. Transfer of record documents.
   3. Finalize payment.

E. Engineer will record minutes and within 5 calendar days after meeting distribute copies to participants.

1.09 POST CONSTRUCTION MEETING

A. Meet with and inspect the Work 11 months after date of Substantial Completion with Owner and Engineer.

B. Arrange meeting at least 7 days before meeting.

C. Meet in Owner's office or other mutually agreed upon place.

D. Inspect the Work and draft list of items to be completed or corrected.

E. Review service and maintenance contracts, and take appropriate corrective action when necessary.

F. Complete or correct defective work and extend correction period accordingly. Require attendance of Contractor, Project Manager, or Superintendent, appropriate manufacturers and installers of major units of constructions, and affected subcontractors.

PART 2 PRODUCTS (NOT USED)

PART 3 EXECUTION (NOT USED)

END OF SECTION

SECTION 01321

SCHEDULES AND REPORTS

PART 1 GENERAL

1.01 SUMMARY

A. Section includes: Schedules and reports.

1.02 SUBMITTAL REQUIREMENTS

A. Submit preliminary and baseline schedule.

B. Submit preliminary and baseline schedule of values.

C. Submit preliminary and baseline schedule of submittals.

D. Submit, on a monthly basis, updated schedules as specified.

E. Submit final schedule update as specified.

F. Submit revised schedules and time impact analyses as specified.

G. Submit schedules in the media and number of copies as follows:
   1. Provide each submittal in PDF format and in other formats specified in this Section.
   2. 3 sets of the CPM network and/or bar chart (as specified by the Owner) on D-size sheets.
      a. Color-coding to be specified by the Owner.
   3. 3 sets of tabular reports listing all activities sorted numerically identifying duration, early start, late start, early finish, late finish, total float, and all predecessor/successor information.
   4. 2 sets of CPM Schedule data electronic files in a native backed-up file (.xer).

1.03 SCHEDULER

A. Designate, in writing and within 5 calendar days after Notice of Award, the person responsible for preparation, maintenance, updating, and revision of all schedules.

B. Qualifications of scheduler:
   1. Authority to act on behalf of Contractor.
   2. A minimum of 5 years verifiable experience in preparation of construction schedules for projects of similar value, size, and complexity.
   3. Knowledge of critical path method (CPM) scheduling utilizing Primavera P6 Professional, SureTrak, or Microsoft Project software.

C. Owner reserves the right to disapprove scheduler when submitted by Contractor if not qualified.

D. Owner reserves the right to remove scheduler from the project if found to be unqualified.

1.04 SCHEDULING FORMAT AND SOFTWARE

A. Schedule format: Utilize CPM format.

B. Prepare computerized schedule utilizing Primavera P6 Professional, SureTrak, or Microsoft Project software, most current version.
   1. Provide 1 licensed copy of the scheduling software to the engineer, registered in the Engineer's name, for the duration of the project.
   2. The provided copy of the software shall be a standalone version for installation on a standalone computer.

C. Contractor and Engineer must agree on the format.

1.05 PRECONSTRUCTION SCHEDULING MEETING

A. Engineer will conduct Preconstruction Scheduling Meeting with Contractor's Project Manager, General Superintendent, and scheduler within 7 calendar days after Notice to Proceed.
   1. This meeting is separate from the Preconstruction Conference Meeting and is intended to exclusively cover schedule issues.

B. At the meeting, review scheduling requirements.
   1. These include schedule preparation, reporting requirements, labor and equipment loading, updates, revisions, and schedule delay analysis.
   2. Present schedule methodology, planned sequence of operations, cost and resource loading methodology, and proposed activity coding structure.
   3. Naming convention: Name schedule files with the year, month and day of the data date, revision identifier, and a description of the schedule.
      a. Example 1: 2014_07_30 rev 1 draft baseline schedule.xer.
      b. Example 2: 2014_09_30 rev 2 sep final update.xer.

C. Filing: Post submitted files to Owner's construction document control system.

1.06 REVIEW AND ACCEPTANCE OF SCHEDULES

A. Engineer will review Baseline Schedule, Schedule Updates, Schedule Revisions and Time Impact Analyses to ascertain compliance with specified project constraints, compliance with milestone dates, reasonableness of durations and sequence, accurate inter-relationships, and completeness.

B. Engineer and Owner will issue written comments following completion of review of Baseline Schedule within 21 calendar days after receipt.

C. Written comments on review of Schedule Updates and Schedule Revisions and Time Impact Analyses will be returned to Contractor within 14 calendar days after receipt by Engineer.

D. Revise and resubmit schedule in accordance with Engineer's comments within 7 calendar days after receipt of such comments or request joint meeting to resolve objections.

E. If Engineer requests a meeting, the Contractor and all major subcontractors must participate in the meeting with Engineer.
   1. Revise and resubmit schedule within 7 calendar days after meeting.

F. Use accepted schedule for planning, organizing, and directing the work and for reporting progress.

G. Engineer's submittal review response:
   1. When schedule reflects Owner's and Contractor's agreement of project approach and sequence, schedule will be accepted by Owner.
   2. Engineer's submittal review response for schedule submittal will be "Receipt Acknowledged - Filed for Record" including applicable comments.
   3. Acceptance of the schedules by the Owner is for general conformance with the Contract Documents and for Owner's planning information and does not relieve the Contractor of sole responsibility for planning, coordinating, and executing the Work within the contract completion dates. Omissions and errors in the accepted schedules shall not excuse performance less than that required by the Contract Documents. Acceptance by the Owner in no way constitutes an evaluation or validation of the Contractor's plan, sequence or means, methods, and techniques of construction.

1.07 SCHEDULE UPDATES

A. Any update:
   1. Prepare update using most recent accepted version of schedule including:
      a. Actual start dates of activities that have been started.
      b. Actual finish dates of activities that have been completed.
      c. Percentage of completion of activities that have been started but not finished.
      d. Actual dates on which milestones were achieved.
      e. Update activities by inputting percent complete figures with actual dates.
      f. Use retained logic in preparing Schedule Updates.
      g. When necessary, input remaining durations for activities whose finish dates cannot be calculated accurately with a percent complete figure only.
      h. Revisions to the schedule may be included that have been previously approved as specified in this Section under Revisions to Schedule.

B. Monthly updates:
   1. Submit written narrative report in conjunction with each Schedule Update including descriptions of the following:
      a. Activities added to or deleted from the schedule are to adhere to cost and other resource loading requirements.
         1) Identify added activities in manner distinctly different from original activity designations.
      b. Changes in sequence or estimated duration of activities.

c. Current or anticipated problems and delays affecting progress, impact of these problems and delays and measures taken to mitigate impact.
d. Assumptions made and activities affected by incorporating change order work into the schedule.

2. Submit updated schedule and materials specified under Submittal of Progress Schedules, 5 calendar days before the monthly schedule update meeting.
3. Since Monthly Schedule Update is to accompany the application for progress payment, submittal and acceptance of the monthly Schedule Update is a condition precedent to the making of any progress payments.

C. Weekly progress meeting:
1. Update the schedule prior to weekly progress meeting.
a. Identify overall progress of each Major Item of Work in the Summary Schedule.
b. If there are significant changes to the schedule, submit a written report at the weekly progress meeting.
2. Should monthly Schedule Update show project completion earlier than current Contract completion date, show early completion time as schedule activity, identified as “Project Float”.
3. Should monthly Schedule Update show project completion later than current Contract completion date, prepare and submit a Schedule Revision in accordance with the Revisions to Schedule.

1.08 REVISIONS TO SCHEDULE

A. Submit Revised Schedule within 5 days:
1. When delay in completion of any activity or group of activities indicates an overrun of the Contract Time or milestone dates by 20 working days or 5 percent of the remaining duration, whichever is less.
2. When delays in submittals, deliveries, or work stoppages are encountered making necessary the replanning or rescheduling of activities.
3. When the schedule does not represent the actual progress of activities.
4. When any change to the sequence of activities, the completion date for major portions of the work, or when changes occur which affect the critical path.
5. When Contract modification necessitates schedule revision, submit schedule analysis of change order work with cost proposal.

B. Create a separate submittal for Schedule Revisions.
1. Comply with schedule updates as specified in this Section.
2. Do not submit with Schedule Updates.

C. Schedule Revisions will not be reflected in the schedule until after the revision is accepted by the Owner.
1. This includes Schedule Revisions submitted for the purpose of mitigating a Contractor-caused project delay (Recovery Schedule).

1.09 ADJUSTMENT OF CONTRACT TIMES

A. Contract Time will be adjusted only for causes specified in Contract Documents.
   1. Non-excusable delay:
      a. Non-excusable delays include actions or inactions of the Contractor, or events for which the Contractor has assumed contractual responsibility (including actions or inactions of subcontractors, suppliers, or material manufacturers at any tier) that would independently delay the completion of the Work beyond the current Contract completion date.
      b. No time extensions will be granted for non-excusable delays.
   2. Excusable delay:
      a. Events which are unforeseeable, outside the control of, and without the fault or negligence of either the Owner or the Contractor (or any party for whom either is responsible), which would independently delay the completion of the Work beyond the current Contract completion date.
      b. The Contractor is entitled to a time extension only.
      c. No other damages will be approved.
   3. Compensable delay:
      a. Actions or inactions of the Owner, or events for which the Owner has assumed contractual responsibility, which would independently delay the completion of the Work beyond the current Contract completion date.
      b. The Contractor is entitled to a time extension and delay damages.
   4. Concurrent delay:
      a. Concurrent delay is any combination of the above 3 types of delay occurring on the same calendar date.
      b. Exception to concurrent delay: Cases where the combination consists of 2 or more instances of the same type of delay occurring on the same calendar date. When one cause of delay is Owner-caused or caused by an event which is beyond the control and without the fault or negligence of either the Owner or the Contractor and the other Contractor-caused, the Contractor is entitled only to a time extension and no delay damages.

B. If the Contractor believes that the Owner has impacted its work, such that the project completion date will be delayed, the Contractor must submit proof demonstrating the delay to the critical path.
   1. This proof, in the form of a Time Impact Analysis, may entitle the Contractor to an adjustment of Contract Time.

C. Time Impact Analysis:
   1. Use the accepted schedule update that is current relative to the time frame of the delay event (change order, third party delay, or other Owner-caused delay). Represent the delay event in the schedule by:
      a. Inserting new activities associated with the delay event into the schedule.
      b. Revising activity logic.
      c. Revising activity durations.
   2. If the project schedule's critical path and completion date are impacted as a result of adding this delay event to the schedule, a time extension equal to the magnitude of the impact may be warranted.

3. The Time Impact Analysis submittal must include the following information:
    a. A fragment of the portion of the schedule affected by the delay event.
    b. A narrative explanation of the delay issue and how it impacted the schedule.
    c. A schedule file used to perform the Time Impact Analysis.

D. When a delay to the project as a whole can be avoided by revising preferential sequencing or logic, and the Contractor chooses not to implement the revisions, the Contractor will be entitled to a time extension and no compensation for extended overhead.

E. Indicate clearly that the Contractor has used, in full, all project float available for the work involved in the request, including any float that may exist between the Contractor's planned completion date and the Contract completion date.
    1. Utilize the latest version of the Schedule Update accepted at the time of the alleged delay, and all other relevant information, to determine the adjustment of the Contract Time.

F. Adjustment of the Contract Times will be granted only when the Contract Float has been fully utilized and only when the revised date of completion of the Work has been pushed beyond the Contract completion date.
    1. Adjustment of the Contract Times will be made only for the number of days that the planned completion of the work has been extended.

G. Actual delays in activities which do not affect the critical path work or which do not move the Contractor's planned completion date beyond the Contract completion date will not be the basis for an adjustment to the Contract Time.

H. If completion of the project occurs within the specified Contract Time, the Contractor is not entitled to job-site or home office overhead beyond the Contractor's originally planned occupancy of the site.

I. Notify Engineer of a request for Contract Time adjustment.
    1. Submit request as specified in the Contract Documents.
    2. In cases where the Contractor does not submit a request for Contract Time adjustment for a specific change order, delay, or Contractor request within the specified period of time, then it is mutually agreed that the particular change order, delay, or Contractor request has no time impact on the Contract completion date and no time extension is required.

J. The Engineer will, within 30 calendar days after receipt of a Contract Time adjustment, request any supporting evidence, review the facts, and advise the Contractor in writing.
    1. Include the new Progress Schedule data, if accepted by the Owner, in the next monthly Schedule Update.
    2. When the Owner has not yet made a final determination as to the adjustment of the Contract Time, and the parties are unable to agree as to the amount of the adjustment to be reflected in the Progress Schedule, reflect that amount of time adjustment in the Progress Schedule as the Engineer may accept as appropriate for such interim purpose.

3. It is understood and agreed that any such interim acceptance by the Engineer shall not be binding and shall be made only for the purpose of continuing to schedule the Work, until such time as a final determination as to any adjustment of the Contract Time acceptable to the Engineer has been made.
4. Revise the Progress Schedule prepared thereafter in accordance with the final decision.

1.10 SCHEDULE PREPARATION

A. Preparation and submittal of Progress Schedule represents Contractor's intention to execute the Work within specified time and constraints.
   1. Failure to conform to requirement may result in termination for cause.

B. Contractor's bid covers all costs associated with the execution of the Work in accordance with the Progress Schedule.

C. During preparation of the preliminary Progress Schedule, Engineer will facilitate Contractor's efforts by being available to answer questions regarding sequencing issues, scheduling constraints, interface points, and dependency relationships.

D. Prepare schedule utilizing Precedence Diagramming Method (PDM).

E. Prepare schedule utilizing activity durations in terms of working days.
   1. Do not exceed 15 working day duration on activities except concrete curing, submittal review, and equipment fabrication and deliveries.
   2. Where duration of continuous work exceeds 15 working days, subdivide activities by location, stationing, or other sub-element of the Work.
   3. Coordinate holidays to be observed with the Owner and incorporate them into the schedule as non-working days.

F. Failure to include an activity required for execution of the Work does not excuse Contractor from completing the Work and portions thereof within specified times and at price specified in Contract.
   1. Contract requirements are not waived by failure of Contractor to include required schedule constraints, sequences, or milestones in schedule.
   2. Contract requirements are not waived by Owner’s acceptance of the schedule. In event of conflict between accepted schedule and Contract requirements, terms of Contract govern at all times, unless requirements are waived in writing by the Owner.

G. Reference schedule to working days with beginning of Contract Time as Day "1".

H. Baseline Schedule and Project Completion:
   1. Should Contractor submit a Baseline Schedule showing project completion more than 20 working days prior to Contract completion date, Owner may issue Change Order, at no cost to Owner, revising time of performance of Work and Contract completion date to match Contractor’s schedule completion date.
   2. Adjust accordingly any Contract milestone dates.

I. Imposed dates, hidden logic prohibited: Do not use imposed dates or hidden logic in preparation of schedule.

J. Interim milestone dates, operational constraints:
   1. In event there are interim milestone dates and/or operational constraints set forth in Contract, show them on schedule.
   2. Do not use Zero Total Float constraint or Mandatory Finish Date on such Contract requirements.

K. Contract float is for the mutual benefit of both Owner and Contractor.
   1. Changes to the project that can be accomplished within this available period of float may be made by Owner without extending the Contract Time, by utilizing float.
   2. Time extensions will not be granted nor delay damages owed until Work extends beyond currently accepted Contract completion date.
   3. Likewise, Contractor may utilize float to offset delays other than delays caused by Owner.
   4. Mutual use of float can continue until all available float shown by schedule has been utilized by either Owner or Contractor, or both. At that time, extensions of the Contract Time will be granted by Owner for valid Owner-caused or third party-caused delays which affect the planned completion date and which have been properly documented and demonstrated by Contractor.
   5. Non-sequestering of float: Pursuant to float sharing requirements of Contract, schedule submittals can be rejected for, use of float suppression techniques such as preferential sequencing or logic, special lead or lag logic restraints, extended activity durations or imposed dates.

L. Commissioning schedule:
   1. Commissioning activities and milestones shall be an integral part of the overall project schedule.
   2. Commissioning activities and milestones shall be extracted from the main project schedule to provide a separate commissioning schedule that is submitted each time the project schedule is submitted.

1.11 NETWORK DETAILS AND GRAPHICAL OUTPUT

A. Produce a clear, legible, and accurate calendar based, time scaled, and graphical network diagram.
   1. Group activities related to the same physical areas of the Work. Produce the network diagram based upon the early start of all activities.

B. Include for each activity, the description, activity number, estimated duration in working days, total float, and all activity relationship lines.

C. Illustrate order and interdependence of activities and sequence in which Work is planned to be accomplished.
   1. Incorporate the basic concept of the precedence diagram network method to show how the start of 1 activity is dependent upon the start or completion of preceding activities and its completion restricts the start of following activities.

D. Indicate the critical path for the project.

E. Delineate the specified contract duration and identify the planned completion of the Work as a milestone.
   1. Show the time period between the planned and Contract completion dates, if any, as an activity identified as project float unless a Change Order is issued to officially change the Contract completion date.

F. Identify system shutdown dates, system tie-in dates, specified interim completion or milestone dates and contract completion date as milestones.

G. Include, in addition to construction activities:
   1. Submission dates and review periods for major equipment submittals.
   2. Any activity by the Owner or the Engineer that may affect progress or required completion dates.
   3. Equipment and long-lead material deliveries over 8 weeks.
   4. Approvals required by regulatory agencies or other third parties.

H. Produce network diagram on 22-inch by 34-inch sheets with grid coordinate system on the border of all sheets utilizing alpha and numeric designations.

I. Identify the execution of the following:
   1. Mobilization.
   2. All required submittals and submittal review times showing 30 calendar day duration for such activities and equal amount of time for re-submittal reviews.
   3. Equipment and materials procurement/fabrication/delivery.
   4. Metal fastenings, framing, structures, and fabrications.
   5. Finishes including coating and painting.
   6. Structural condition assessment and rehabilitation efforts.
   7. Other mechanical equipment including fans and heating, ventilating, and air conditioning equipment.
   8. Odor treatment system modifications.
   9. Pipe laying and bypassing.
   10. Piping, fittings, and appurtenances, including identification of ordering and fabrication lead time, layout, installation and testing.
   11. Valves, gates, and operators, including identification of order lead-time, installation, and testing.
   12. Electrical work including lighting, heating and cooling, and special systems, including identification of ordering lead-time.
   13. Commissioning Phase:
      a. Source Testing.
      b. Owner Training.
      c. Installation Testing.
      d. Functional Testing.
      e. Clean Water Facility Testing.
   14. Process Start-up Phase:
      a. Process Start-up.
      b. Process Operational Period.
      c. Instrumentation and Controls Performance Testing.
   15. Substantial completion.
   16. Punch list work.
   17. Demobilization.

1.12 WEATHER DAY ALLOWANCE

A. Definition:
   1. Weather conditions that prevent or inhibit the Contractor's performance of the Work and affect the Critical Path indicated on the Schedule shall be referred to as a Weather Day.
   2. A Weather Day is defined as the Contractor being unable to perform at least 4 hours of work on the Critical Path.

B. Allowance:
   1. Include as a separate identifiable activity on the critical path, an activity labeled "Weather Days Allowance".

C. Actual weather day:
   1. Insert a weather delay activity in critical path to reflect actual weather day occurrences when weather days are experienced and accepted by Engineer.
   2. Reduce duration of Weather Days Allowance activity as weather delays are experienced and inserted into the Schedule. Remaining weather days in Weather Day Allowance at completion of project is considered float.
   3. The Contractor shall provide a written notice to the Engineer of the occurrence of a weather day within 2 days after the onset of such weather and shall describe in reasonable detail the type of weather encountered and the Work interfered with or interrupted.
      a. A schedule update will not suffice as a written notice.
      b. The Engineer will determine if the weather day constitutes a use of a portion of the Weather Day Allowance.
      c. After use of all the Weather Day Allowance, the Engineer will determine if the Contractor is entitled to an extension of the Contract Time due to weather conditions.
      d. Weather days are considered excusable delay as defined in this Section.

1.13 SCHEDULE OF SUBMITTALS

A. Schedule of Submittals shall include submittals required in the Contract Documents but not limited to test plans, training plans, test procedures, operation and maintenance manuals, shop drawings, samples, record documents, and specifically required certificates, warranties, and service agreements.
   1. Data for "Or Equals" or substitutions shall be submitted with the Schedule of Submittals.

B. Preliminary Schedule of Submittals:
   1. Due date: After Preliminary Schedule has been submitted and accepted by Owner.
   2. Format:
      a. Include submittals anticipated in the first 90 calendar days after award of contract using early start dates.
      b. Indicate week and month anticipated for submittal to Engineer.
      c. Indicate "Priority" submittals where review time can impact Contractor's schedule.
         1) "Priority" indication will not alter review times specified in Section 01330 - Submittal Procedures.

2) Engineer will endeavor to provide early review of “Priority” submittals where possible.

d. List of “Or Equals” or substitutions.

3. Submittal of Preliminary Schedule of Submittals shall be a condition precedent to Owner making progress payments during the first 90 calendar days after award of contract.

C. Final Schedule of Submittals:

1. Due date: 30 days after Baseline Schedule has been submitted and accepted by Owner.
2. Format:
   a. Include submittals using early start dates.
   b. Include all submittals, including those required in the Preliminary Schedule of Submittals.
   c. Indicate week and month anticipated for submittal to Engineer.
   d. Indicate “Priority” submittals where review time can impact Contractor’s schedule.
      1) “Priority” indication will not alter review times specified in Section 01330 - Submittal Procedures.
      2) Engineer will endeavor to provide early review of “Priority” submittals where possible.
   e. Data for “Or Equals” or substitutions.
3. Submittal of Final Schedule of Submittals shall be a condition precedent to Owner making progress payments after the first 90 calendar days after Notice to Proceed.

D. Provide updated Schedule of Submittals with updated schedules if schedule revisions change listing and timing of submittals.

1.14 BASELINE SCHEDULE AND BASELINE SCHEDULE OF VALUES

A. Due date: No more than 45 calendar days after Notice to Proceed.

B. Format:

1. Schedule: Show sequence and interdependence of all activities required for complete performance of all Work, beginning with date of Notice to Proceed and concluding with date of final completion of Contract.
2. Schedule of Values: As specified in Section 01292 - Schedule of Values.

1.15 SUMMARY SCHEDULE

A. Due date: At weekly progress meetings and after each Schedule Update or Schedule Revision.

B. Format:

1. Consolidate groups of activities associated with Major Items of Work shown on Baseline Schedule.
2. intended to give an overall indication of the project schedule without a large amount of detail.

1.16 COST FLOW SUMMARY

A. Due date: After Baseline Schedule has been submitted and accepted by the Owner, submit on a monthly basis.

B. Format:
   1. Tabular and graphic report showing anticipated earnings each month of the Contract period.
   2. Base tabulation on the summation of the cost-loaded activities each month.
   3. Show planned amounts.
   4. Show actual earned amounts and anticipated remaining earnings.
   5. Spreadsheet format of all schedule activities showing cost and percentage completion during the current month for which payment is sought.

1.17 PROGRESS SCHEDULE AND UPDATED SCHEDULE OF VALUES

A. Due date: Submit on a monthly.

1.18 WEEKLY SCHEDULE

A. Due date: At every weekly progress meeting.

B. Format:
   1. Contractor and Engineer must agree on the format.
   2. 6-Week Schedule showing the activities completed during the previous week and the Contractor's schedule of activities for following 5 weeks.
   3. Use the logic and conform to the status of the current progress schedule when producing a Weekly Schedule in CPM schedule or a bar chart format.
      a. In the event that the Weekly Schedule no longer conforms to the current schedule, Contractor may be required to revise the schedule as specified in this Section.
   4. The activity designations used in the Weekly Schedule must be consistent with those used in the Baseline Schedule and the monthly Schedule Updates.

1.19 MANPOWER SCHEDULE

A. Due date: With progress payments after Baseline Schedule has been submitted and accepted by Owner.

B. Format:
   1. Schedule histogram depicting total craft manpower and craft manpower for Contractor's own labor forces and those of each subcontractor.
   2. Submit electronically in Excel format, with 1 paper copy.

C. Progress payments after the first 90 calendar days after Notice to Proceed will not be made until manpower schedule is provided.

1.20 FINAL SCHEDULE

A. The final Schedule Update becomes the As-Built Schedule.
   1. The As-Built Schedule reflects the exact manner in which the project was constructed by reflecting actual start and completion dates for all activities accomplished on the project.
   2. Contractor's Project Manager and scheduler sign and certify the As-Built Schedule as being an accurate record of the way the project was actually constructed.

B. Retainage will not be released until final Schedule Update is provided.

PART 2 PRODUCTS (NOT USED)

PART 3 EXECUTION (NOT USED)

END OF SECTION

SECTION 01330

SUBMITTAL PROCEDURES

PART 1 GENERAL

1.01 SUMMARY

A. Section includes: Requirements and procedures for submittals to confirm compliance with Contract Documents.

1.02 GENERAL INSTRUCTIONS

A. Contractor is responsible to determine and verify field measurements, field construction criteria, materials, dimensions, catalog numbers and similar data, and check and coordinate each item with other applicable approved shop drawings and Contract Document requirements.

B. Provide submittals:
   1. That are specified or reasonably required for construction, operation, and maintenance of the Work.
   2. That demonstrate compliance with the Contract Documents.

C. Where multiple submittals are required, provide a separate submittal for each specification section.
   1. In order to expedite construction, the Contractor may make more than 1 submittal per specification section, but a single submittal may not cover more than 1 specification section:
      a. The only exception to this requirement is when 1 specification section covers the requirements for a component of equipment specified in another section.
      b. For example, circuit breakers are a component of switchgear. The switchgear submittal must also contain data for the associated circuit breakers, even though they are covered in a different specification section.

D. Prepare submittals in the English language. Do not include information in other languages.

E. Present measurements in customary American units (feet, inches, pounds, etc.).

F. Must be clear and legible, and of sufficient size for presentation of information.

G. Page size other than drawings:
   1. Minimum page size will be 8-1/2 inches by 11 inches:
   2. Maximum page size will be 11 inches by 17 inches.

H. Drawing sheet size:
   1. Maximum sheets size: 22-inch by 34-inch.
      a. Minimum plan scale: 1/8-inch equals 1 foot-0 inch.
      b. Minimum font size: 1/8 inch minimum.
   2. 11-inch by 17-inch sheet:
      a. Minimum plan scale: 1/8-inch equals 1 foot-0 inch.
      b. Minimum font size: 1/8 inch minimum.

I. Show dimensions, construction details, wiring diagrams, controls, manufacturers, catalog numbers, and all other pertinent details.

J. Provide submittal information from only 1 manufacturer for a specified product. Submittals with multiple manufacturers for 1 product will be rejected without review.

1.03 SUBMITTAL ORGANIZATION

A. Organize submittals in exactly the same order as the items are referenced, listed, and/or organized in the specification section.

B. For submittals that cover multiple devices used in different areas under the same specification section, the submittal for the individual devices must list the area where the device is used.

C. Bookmarks:
   1. Bookmarks shall match the table of contents.
   2. Bookmark each section (tab) and heading.
   3. Drawings: Bookmark at a minimum, each discipline, area designation, or appropriate division.
   4. At file opening, display all levels of bookmarks as expanded.

D. Where applicable (i.e., except for drawings, figures, etc.) submittal content shall be electronically searchable utilizing the PDF file as submitted.

E. Thumbnails optimized for fast web viewing.

F. Sequentially number pages within the tabbed sections:
   1. Submittals that are not fully indexed and tabbed with sequentially numbered pages, or are otherwise unacceptable, will be returned without review.

G. Attachments:
   1. Specification section: Include with each submittal a copy of the relevant specification section.
      a. Indicate in the left margin, next to each pertinent paragraph, either compliance with a check (√) or deviation with a consecutive number (1, 2, 3).
      b. Provide a list of all numbered deviations with a clear explanation and reason for the deviation.
   2. Drawings: Include with each submittal a copy of the relevant Drawing, including relevant addendum updates.
      a. Indicate either compliance with a check (√) or deviation with a consecutive number (1, 2, 3).

b. Provide a list of all numbered deviations with a clear explanation and reason for the deviation.
c. Provide field dimensions and relationship to adjacent or critical features of the Work or materials.

H. Contractor: Prepare submittal information in sufficient detail to show compliance with specified requirements.
1. Determine and verify quantities, field dimensions, product dimensions, specified design and performance criteria, materials, catalog numbers, and similar data.
2. Coordinate submittal with other submittals and with the requirements of the Contract Documents.
3. Check, verify, and revise submittals as necessary to bring them into conformance with Contract Documents and actual field conditions.

I. Contractor: Prepare "Or Equal" submittal information.
1. Provide standard submittal requirements.
a. In addition, provide in sufficient detail to show reason for variance from specified product and impacts.
2. Provide reason the specified product is not being provided.
3. Explain the benefits to the Owner for accepting the "Or Equal".
4. Itemized comparison of the proposed "Or Equal" with product specified including a list of significant variations:
a. Design features.
b. Design dimensions.
c. Installation requirements.
d. Operations and maintenance requirements.
e. Availability of maintenance services and sources of replacement materials.
5. Reference projects where the product has been successfully used:
a. Name and address of project.
b. Year of installation.
c. Year placed in operation.
d. Name of product installed.
e. Point of contact: Name and phone number.
6. Define impacts:
a. Impacts to other contracts.
b. Impacts to other work or products.
7. Contractor represents the following:
a. Contractor bears the burden of proof of the equivalency of the proposed "Or Equal".
b. Proposed "Or Equal" is equal or superior to the specified product.
c. Contractor will provide the warranties or bonds that would be provided on the specified product on the proposed "Or Equal", unless Owner requires a Special Warranty.
d. Contractor will coordinate installation of accepted "Or Equal" into the Work and will be responsible for the costs to make changes as required to the Work.
e. Contractor waives rights to claim additional costs caused by proposed "Or Equal" which may subsequently become apparent.

J. Contractor: Prepare substitution submittal information.
    1. Provide standard submittal requirements.
        a. In addition, provide in sufficient detail to show reason for variance from specified product and impacts.
    2. Provide reason the specified product is not being provided.
    3. Explain the benefits to the Owner for accepting the substitution.
    4. Itemized comparison of the proposed substitution with product specified including a list of significant variations:
        a. Design features.
        b. Design dimensions.
        c. Installation requirements.
        d. Operations and maintenance requirements.
        e. Availability of maintenance services and sources of replacement materials.
    5. Reference projects where the product has been successfully used:
        a. Name and address of project.
        b. Year of installation.
        c. Year placed in operation.
        d. Name of product installed.
        e. Point of contact: Name and phone number.
    6. Define impacts:
        a. Impacts to Contract Price.
            1) Required license fees or royalties.
            2) Do not include costs under separate contracts.
            3) Do not include Engineer's costs for redesign or revision of Contract Documents.
        b. Impacts to Contract Time.
        c. Impacts to Contract Scope.
        d. Impacts to other contracts.
        e. Impacts to other work or products.
    7. Contractor represents the following:
        a. Contractor shall pay associated costs for Engineer to evaluate the substitution.
        b. Contractor bears the burden of proof of the equivalency of the proposed substitution.
        c. Proposed substitution does not change the design intent and will have equal performance to the specified product.
        d. Proposed substitution is equal or superior to the specified product.
        e. Contractor will provide the warranties or bonds that would be provided on the specified product on the proposed substitution, unless Owner requires a Special Warranty.
        f. Contractor will coordinate installation of accepted substitution into the Work and will be responsible for the costs to make changes as required to the Work.
        g. Contractor waives rights to claim additional costs caused by proposed substitution which may subsequently become apparent.

1.04 SUBMITTAL IDENTIFICATION NUMBERING

A. Number each submittal using the format defined below:

	Spec Section Number	Dash	Initial Submittal - Sequential Number	Decimal Point	Subsequent Submittal Revisions Sequential Number
Example 1 Description	*Cast-In-Place Concrete*		*8th initial submittal*		
	03300	-	0008		
Example 2 Description	*Cast-In-Place Concrete*		*8th initial submittal*		*First revision to the 8th initial submittal*
	03300	-	0008	.	1

1.05 SUBMITTALS IN ELECTRONIC MEDIA FORMAT

A. General: Provide all information in PC-compatible format using Windows® operating system as utilized by the Owner and Engineer.

B. Text: Provide text documents and manufacturer's literature in Portable Document Format (PDF).

C. Graphics: Provide graphic submittals (drawings, diagrams, figures, etc.) utilizing Portable Document Format (PDF).

1.06 SUBMITTAL PROCEDURE

A. Engineer: Review submittal and provide response:
   1. Review description:
      a. Engineer will be entitled to rely upon the accuracy or completeness of designs, calculations, or certifications made by licensed professionals accompanying a particular submittal whether or not a stamp or seal is required by Contract Documents or Laws and Regulations.
      b. Engineer's review of submittals shall not release Contractor from Contractor's responsibility for performance of requirements of Contract Documents. Neither shall Engineer's review release Contractor from fulfilling purpose of installation nor from Contractor's liability to replace defective work.
      c. Engineer's review of shop drawings, samples, or test procedures will be only for conformance with design concepts and for compliance with information given in Contract Documents.
      d. Engineer's review does not extend to:
         1) Accuracy of dimensions, quantities, or performance of equipment and systems designed by Contractor.

2) Contractor's means, methods, techniques, sequences, or procedures except when specified, indicated on the Drawings, or required by Contract Documents.
3) Safety precautions or programs related to safety which shall remain the sole responsibility of the Contractor.

e. Engineer can Approve or Not Approve any exception at their sole discretion.

2. Review timeframe:
   a. Except as may be provided in technical specifications, a submittal will be returned within 30 calendar days.
   b. When a submittal cannot be returned within the specified period, Engineer will, within a reasonable time after receipt of the submittal, give notice of the date by which that submittal will be returned.
   c. Engineer's acceptance of progress schedule containing submittal review times less than those specified or agreed to in writing by Engineer will not constitute Engineer's acceptance of review times.
   d. Critical submittals:
      1) Contractor will notify Engineer in writing that timely review of a submittal is critical to the progress of Work.
3. Schedule delays:
   a. No adjustment of Contract Times or Contract Price will be allowed due to Engineer's review of submittals, unless all of the following criteria are met:
      1) Engineer has failed to review and return first submission within the agreed upon time frame.
      2) Contractor demonstrates that delay in progress of Work is directly attributable to Engineer's failure to return submittal within time indicated and accepted by Engineer.
4. Review response will be returned to Contractor with one of the following dispositions:
   a. Approved:
      1) No Exceptions:
         a) There are no notations or comments on the submittal and the Contractor may release the equipment for production.
      2) Make Corrections Noted - See Comments:
         a) The Contractor may proceed with the Work, however, all notations and comments must be incorporated into the final product.
         b) Resubmittal not required.
      3) Make Corrections Noted - Confirm:
         a) The Contractor may proceed with the Work, however, all notations and comments must be incorporated into the final product.
         b) Submit confirmation specifically addressing each notation or comment to the Engineer within 15 calendar days of the date of the Engineer's transmittal requiring the confirmation.
   b. Not approved:
      1) Correct and resubmit:
         a) Contractor may not proceed with the Work described in the submittal.
         b) Contractor assumes responsibility for proceeding without approval.

c) Resubmittal of complete submittal package is required within 30 calendar days of the date of the Engineer's submittal review response.

2) Rejected - See Remarks:
   a) Contractor may not proceed with the Work described in the submittal.
   b) The submittal does not meet the intent of the Contract Documents. Resubmittal of complete submittal package is required with materials, equipment, methods, etc. that meet the requirements of the Contract Documents.

c. Receipt acknowledged - Filed for record:
   1) This is used in acknowledging receipt of informational submittals that address means and methods of construction such as schedules and work plans, conformance test reports, health and safety plans, etc.

d. Receipt acknowledged with comments - Resubmit:
   1) This is used in acknowledging receipt of informational submittals that address means and methods of construction such as schedules and work plans, conformance test reports, health and safety plans, etc. Feedback regarding missing information, conflicting information, or other information that makes it incomplete can be made with comments.

B. Contractor: Prepare resubmittal, if applicable:
   1. Clearly identify each correction or change made.
   2. Include a response in writing to each of the Engineer's comments or questions for submittal packages that are resubmitted in the order that the comments or questions were presented from the 1st and subsequent submittals and numbered consistent with the Engineer's numbering.
      a. Acceptable responses to Engineer's comments are listed below:
         1) "Incorporated" Engineer's comment or change is accepted and appropriate changes are made.
         2) "Response" Engineer's comment not incorporated. Explain why comment is not accepted or requested change is not made. Explain how requirement will be satisfied in lieu of comment or change requested by Engineer.
      b. Reviews and resubmittals:
         1) Contractor shall provide resubmittals which include responses to all submittal review comments separately and at a level of detail commensurate with each comment.
         2) Contractor responses shall indicate how the Contractor resolved the issue pertaining to each review comment:
            a) Responses such as "acknowledged" or "noted" are not acceptable.
         3) Resubmittals which do not comply with this requirement may be rejected and returned without review.
         4) Contractor shall be allowed no extensions of any kind to any part of their contract due to the rejection of non-compliant submittals.
         5) Submittal review comments not addressed by the Contractor in resubmittals shall continue to apply whether restated or not in subsequent reviews until adequately addressed by the Contractor to the satisfaction of the reviewing and approving authority.

c. Any resubmittal that does not contain responses to the Engineer's previous comments shall be returned for Revision and Resubmittal. No further review by the Engineer will be performed until a response for previous comments has been received.

3. Resubmittal timeframe:
   a. Contractor shall provide resubmittal within 15 days.
   b. When a resubmittal cannot be returned within the specified period, Contractor shall notify Engineer in writing.
4. Review costs:
   a. Costs incurred by Owner as a result of additional reviews of a particular submittal after the second time it has been reviewed shall be borne by Contractor.
   b. Reimbursement to Owner will be made by deducting such costs from Contractor's subsequent progress payments.

1.07 PRODUCT DATA

A. Edit submittals so that the submittal specifically applies to only the product furnished.

B. Neatly cross out all extraneous text, options, models, etc. that do not apply to the product being furnished, so that the information remaining is only applicable to the product being furnished.

1.08 SHOP DRAWINGS

A. Contractor to field verify elevation, coordinates, and pipe material for pipe tie-in to pipeline or structure prior to the preparation of shop drawings.

B. Indicate project designated equipment tag numbers for submittal of devices, equipment, and assemblies.

PART 2 PRODUCTS (NOT USED)

PART 3 EXECUTION (NOT USED)

END OF SECTION

SECTION 01357

DELEGATED DESIGN PROCEDURES

PART 1 GENERAL

1.01 SUMMARY

A. Section includes: Delegated Design Procedures.

1.02 GENERAL

A. Delegated Design - Professional design services assigned to the Contractor by express delegation in the Contract Documents. Work is “Delegated Design” where the Technical Sections require the Contractor to provide professional design services and to submit signed and sealed documents from a registered Professional Engineer.

B. Contractor’s Professional Engineer – The design professional retained by the Contractor to perform Delegated Design.

C. Owner may require Contractor to provide professional design services for a portion of the Work by express delegation in the Contract Documents.
   1. Requirements of Delegated Design component as specified in the technical section and as indicated on the Drawings.
   2. Such delegation will specify the performance and design criteria that such services must satisfy, and the Submittals that Contractor must furnish to Engineer with respect to the Delegated Design.

D. Contractor shall cause such Delegated Design services to be provided pursuant to the professional standard of care by a properly licensed design professional, whose signature and seal shall appear on drawings, calculations, specifications, certifications, and submittals prepared by such design professional.
   1. Contractor shall not be responsible for the adequacy of performance or design criteria specified by Owner or Engineer.
   2. Contractor is not required to provide professional services in violation of applicable Laws and Regulations.
   3. Such design professional shall issue certifications of design required by Laws and Regulations.
   4. If a Shop Drawing or other Submittal related to the Owner-delegated design is prepared by Contractor, a Subcontractor, or others for submittal to Engineer, then such Shop Drawing or other Submittal shall bear the written approval of Contractor’s design professional when submitted by Contractor to Engineer.

E. Owner and Engineer shall be entitled to rely upon the adequacy, accuracy, and completeness of the services, certifications, and approvals performed or provided by the design professionals retained or employed by Contractor under Delegated Design, subject to the professional standard of care and the performance and design criteria stated in the Contract Documents.

F. Engineer's review, approval, and other determinations regarding design drawings, calculations, specifications, certifications, and other Submittals furnished by Contractor pursuant to a Delegated Design will be only for the following limited purposes:
   1. Confirming that submittal is in conformance with the performance and design criteria specified in the Contract Documents.

1.03 CONTRACTOR'S PROFESSIONAL ENGINEER

A. Contractor or Subcontractor shall retain a licensed professional engineer to perform Delegated Design.

B. Qualifications:
   1. Holding a current license to perform the specified design in the same jurisdiction as the Project site.
   2. Experienced in designing similar systems of similar complexity.

C. Insurance:
   1. Provide Contractor's Professional Engineer's Professional Liability Insurance.

D. Responsibilities:
   1. Review and design in accordance with system performance and design criteria stated in the Contract Documents.
      a. Prepare written requests for clarifications or interpretations of performance or design criteria for submittal to Engineer by Contractor.
   2. Sign and seal design reports, calculations, design drawings and specifications, and other design Submittals for the Delegated Design Work.
   3. Review and submit written approval of submittals related to the Delegated Design Work.
   4. Design modifications to the Delegated Design Work as required.
   5. Visit the Site, as required, to verify that installation of the Delegated Design Work is in conformance with the Delegated Design drawings and specifications.
   6. Submit through Contractor to Engineer written, signed, and sealed certification that the installed Delegated Design Work complies with Contractor's professional engineer's design.

1.04 SUBMITTALS

A. Prior to the start of Delegated Design:
   1. Contractor's Professional Engineer's qualifications:
      a. Experience for the Delegated Design.
      b. Evidence of professional engineering license.
   2. Contractor's Professional Engineer Professional Liability Insurance certificate.

B. Delegated Design:
   1. Product data:
      a. Details related to the Delegated Design as specified in technical sections to completely describe the system.

2. Design documents with signature and seal from the Contractor's Professional Engineer.
    a. Design documents include but are not limited to drawings, calculations, specifications, inspection reports, and certifications.
3. Lists and schedules:
    a. Prepare and submit lists or schedules of items where delegated design is required by the Contract Documents.
    b. Group items by location in the Work.
        1) When "Area Numbers" are indicated on the Contract Drawings, group lists in accordance with those "areas."
        2) For work without area numbers, group using logical divisions acceptable to Engineer.
        3) Group items within each "area" as follows:
            a) Systems.
            b) Components.
            c) Supports.
            d) Anchorage.
            e) Bracing.

C. Construction services:
1. Contractor's Professional Engineer's comments on submittals.
2. Other construction documents, as required.

1.05 ENGINEER RESPONSE TO DELEGATED DESIGN SUBMITTALS

A. The Engineer response will be either of the following:
1. Approved. Make Corrections Noted - See Comments:
    a. The Contractor may proceed with the Work, however, all notations and comments must be incorporated into the final product.
    b. The review was for the limited purpose of determining that the document was stamped by a Professional Engineer and that such design is generally consistent with and will not negatively affect the design concept presented in the Contract Documents.
2. Rejected - See Remarks:
    a. Contractor may not proceed with the Work described in the submittal.
    b. The submittal does not meet the intent of the Contract Documents.
    c. Resubmittal of complete submittal package is required with materials, equipment, methods, etc. that meet the requirements of the Contract Documents.

PART 2 PRODUCTS (NOT USED)

PART 3 EXECUTION (NOT USED)

END OF SECTION

SECTION 01410

REGULATORY REQUIREMENTS

PART 1 GENERAL

1.01 SUMMARY

A. Section includes: regulatory requirements.

1.02 APPLICABLE CODES

A. National Fire Protection Association (NFPA):
   1. NFPA 70: National Electrical Code, 2021.
   2. NFPA 1: Uniform Fire Code, 2021.
   3. NFPA 101: Life Safety Code, 2021.
   4. Florida Fire Prevention Code, 2020.

B. Florida Building Commission (FBC):
   1. Building code:
      a. Florida Building Code, 7th Edition, 2020: Building.
      b. Florida Building Code, 7th Edition, 2020: Existing Building.
      c. Florida Building Code, 7th Edition, 2020: Accessibility.
      d. Florida Building Code, 7th Edition, 2020: Test Protocols for High-Velocity Hurricane Zones.
   2. Energy code:
      a. Florida Building Code, 7th Edition, 2020: Energy Conservation.
   3. Fire code:
      a. Florida Fire Prevention Code, 6th Edition, 2017.
   4. Mechanical code:
      a. Florida Building Code, 7th Edition, 2020 Mechanical.
   5. Plumbing code:
      a. Florida Building Code, 7th Edition, 2020.

PART 2 PRODUCTS (NOT USED)

PART 3 EXECUTION (NOT USED)

END OF SECTION

SECTION 01450

QUALITY CONTROL

PART 1 GENERAL

1.01 SUMMARY

A. Section includes:
   1. Quality control and control of installation.
   2. Tolerances.
   3. References.
   4. Mock-up requirements.
   5. Authority and duties of Owner's representative or inspector.
   6. Sampling and testing.
   7. Testing and inspection services.
   8. Contractor's responsibilities.

1.02 QUALITY CONTROL AND CONTROL OF INSTALLATION

A. Monitor quality control over suppliers, manufacturers, products, services, site conditions, and workmanship, to produce Work of specified quality.

B. Comply with manufacturers' instructions, including each step in sequence.

C. When manufacturers' instructions conflict with Contract Documents, request clarification from Engineer before proceeding.

D. Comply with specified standards as minimum quality for the Work except where more stringent tolerances, codes, or specified requirements indicate higher standards or more precise workmanship.

E. Perform Work by persons qualified to produce required and specified quality.

F. Verify field measurements are as indicated on Shop Drawings or as instructed by manufacturer.

G. Secure products in place with positive anchorage devices designed and sized to withstand stresses, vibration, physical distortion, or disfigurement.

H. When specified, products will be tested and inspected either at point of origin or at Work site:
   1. Notify Engineer in writing well in advance of when products will be ready for testing and inspection at point of origin.
   2. Do not construe that satisfactory tests and inspections at point of origin is final acceptance of products. Satisfactory tests or inspections at point of origin do not preclude retesting or re-inspection at Work site.

I. Do not ship products which require testing and inspection at point of origin prior to testing and inspection.

1.03 TOLERANCES

A. Monitor fabrication and installation tolerance control of products to produce acceptable Work. Do not permit tolerances to accumulate.

B. Comply with manufacturers' tolerances. When Manufacturers' tolerances conflict with Contract Documents, request clarification from Engineer before proceeding.

C. Adjust products to appropriate dimensions; position before securing products in place.

1.04 REFERENCES

A. ASTM International (ASTM):
   1. E329 - Standard for Agencies Engaged in Construction Inspection, Testing or Special Inspection.

B. National Institute of Standards and Technology (NIST).

1.05 PRODUCT REQUIREMENTS

A. For products or workmanship specified by association, trade, or other consensus standards, comply with requirements of standard, except when more rigid requirements are specified or are required by applicable codes.

B. Conform to reference standard by date of issue current on date of Contract Documents, except where specific date is established by code.

C. Obtain copies of standards where required by product specification sections.

D. When specified reference standards conflict with Contract Documents, request clarification from Engineer before proceeding.

1.06 AUTHORITY AND DUTIES OF OWNER'S REPRESENTATIVE OR INSPECTOR

A. Owner’s Project Representative employed or retained by Owner is authorized to inspect the Work.

B. Inspections may extend to entire or part of the Work and to preparation, fabrication, and manufacture of products for the Work.

C. Deficiencies or defects in the Work which have been observed will be called to Contractor’s attention.

D. Inspector will not:
   1. Alter or waive provisions of Contract Documents.
   2. Inspect Contractor’s means, methods, techniques, sequences, or procedures for construction.
   3. Accept portions of the Work, issue instructions contrary to intent of Contract Documents, or act as foreman for Contractor. Supervise, control, or direct Contractor’s safety precautions or programs; or inspect for safety conditions on Work site, or of persons thereon, whether Contractor’s employees or others.

E. Inspector will:
   1. Conduct on-site observations of the Work in progress to assist Engineer in determining when the Work is, in general, proceeding in accordance with Contract Documents.
   2. Report to Engineer whenever Inspector believes that Work is faulty, defective, does not conform to Contract Documents, or has been damaged; or whenever there is defective material or equipment; or whenever Inspector believes the Work should be uncovered for observation or requires special procedures.

1.07 TESTING AND INSPECTION SERVICES

A. Contractor will employ and pay for specified services of an independent firm to perform Contractor quality control testing as required in the technical specifications for various work and materials.

B. Owner will employ and pay for specified services of an “Owner’s independent testing firm” certified to perform testing and inspection as required in the technical specifications for various work and materials or stipulated in Section 01455 - Regulatory Quality Assurance to confirm Contractor’s compliance with Contract Documents.

C. The Owner’s independent testing firm will perform tests, inspections and other services specified in individual specification sections and as required by Owner and requested by the Engineer.

D. The qualifications of laboratory that will perform the testing, contracted by the Owner or by the Contractor, shall be as follows:
   1. Has authorization to operate in the state where the project is located.
   2. Meets “Recommended Requirements for Independent Laboratory Qualification,” published by American Council of Independent Laboratories.
   3. Meets requirements of ASTM E329.
   4. Laboratory Staff: Maintain full time specialist on staff to review services.
   5. Testing Equipment: Calibrated at reasonable intervals with devices of accuracy traceable to NIST or accepted values of natural physical constants.
   6. Will submit copy of report of inspection of facilities made by Materials Reference Laboratory of NIST during most recent tour of inspection, with memorandum of remedies of deficiencies reported by inspection.

E. Testing, inspections, and source quality control may occur on or off project site. Perform off-site testing inspections and source quality control as required by Engineer or Owner.

F. Contractor shall cooperate with Owner’s independent testing firm, furnish samples of materials, equipment, tools, storage, safe access, and assistance by incidental labor as requested.
   1. Notify Engineer and Owner’s independent testing firm 48 hours prior to expected time for operations requiring testing.
   2. Make arrangements with Owner’s independent testing firm and pay for additional samples and tests required for Contractor’s use.

G. Limitations of authority of testing Laboratory: Owner's independent testing firm or Laboratory is not authorized to:
   1. Agency or laboratory may not release, revoke, alter, or enlarge on requirements of Contract Documents.
   2. Agency or laboratory may not approve or accept any portion of the Work.
   3. Agency or laboratory may not assume duties of Contractor.
   4. Agency or laboratory has no authority to stop the Work.

H. Testing and employment of an Owner's independent testing firm or laboratory shall not relieve Contractor of obligation to perform Work in accordance with requirements of Contract Documents.

I. Re-testing or re-inspection required because of non-conformance to specified requirements shall be performed by same Owner's independent testing firm on instructions by Engineer. Payment for re-testing or re-inspection will be charged to Contractor by deducting testing charges from Contract Sum/Price.

J. The Owner's independent testing firm responsibilities will include:
   1. Provide qualified personnel at site. Cooperate with Engineer and Contractor in performance of services.
   2. Perform specified sampling and testing of products in accordance with specified standards.
   3. Promptly notify Engineer and Contractor of observed irregularities or non-conformance of Work or products.
   4. Perform additional tests required by Engineer.
   5. Attend preconstruction meetings and progress meetings when requested.

K. Owner's independent testing firm individual test reports:
   1. After each test, Owner's independent testing firm will promptly submit electronically report to Engineer and to Contractor.
   2. Test reports shall include at least the following information:
      a. Date issued.
      b. Project title and number.
      c. Name of inspector.
      d. Date and time of sampling or inspection.
      e. Identification of product and specifications section.
      f. Location in Project.
      g. Type of inspection or test.
      h. Date of test.
      i. Certified test results stamped and signed by a registered Engineer in the state where the project is located.
      j. Summary of conformance with Contract Documents.
      k. When requested by Engineer, the Owner's independent testing firm will provide interpretation of test results.

1.08 CONTRACTOR'S RESPONSIBILITIES

A. Cooperate with Owner’s independent testing firm or laboratory personnel and provide access to construction and manufacturing operations.

B. Secure and deliver to Owner’s independent testing firm or laboratory adequate quantities of representative samples of materials proposed to be used and which require testing.

C. Submit product test reports electronically.

D. Furnish incidental labor and facilities:
   1. To provide access to construction to be tested.
   2. To obtain and handle samples at Work site or at source of product to be tested.
   3. To facilitate inspections and tests.
   4. For storage and curing of test samples.

E. Notify Owner’s independent testing firm or laboratory 48 hours in advance of when observations, inspections and testing is needed for laboratory to schedule and perform in accordance with their notice of response time.

PART 2 PRODUCTS (NOT USED)

PART 3 EXECUTION (NOT USED)

END OF SECTION

SECTION 01455

REGULATORY QUALITY ASSURANCE

PART 1 GENERAL

1.01 SUMMARY

A. Section includes: description of project regulatory requirements for quality assurance that includes special inspections, special certification, and structural observation.

1.02 REFERENCES

A. American Concrete Institute (ACI):
   1. 318 - Building Code Requirements for Structural Concrete.

B. American Institute of Steel Construction (AISC):
   1. 360 - Specification for Structural Steel Buildings.

C. American Society of Civil Engineers (ASCE):
   1. 7 - Minimum Design Loads for Buildings and Other Structures.

D. ASTM International (ASTM):
   1. A706 - Standard Specification for Deformed and Plain Low-Alloy Steel Bars for Concrete Reinforcement.
   2. C31 - Standard Practice for Making and Curing Concrete Test Specimens in the Field.
   3. C172 - Standard Practice for Sampling Freshly Mixed Concrete.
   4. C1611 - Standard Test Method for Slump Flow of Self-Consolidating Concrete.

E. Florida Building Code (FBC) 2020.

1.03 DEFINITIONS

A. Special Inspection: Inspection of the materials, installation, fabrication, erection, or placement of components and connections requiring special expertise to ensure compliance with approved construction documents and referenced standards.

B. Special Inspection, Continuous: The full-time observation of work requiring special inspection by an approved special inspector who is present in the area where the work is being performed.

C. Special Inspection, Periodic: The part-time, or intermittent observation of work requiring special inspection by an approved special inspector who is present in the area where the work is being performed and at the completion of the work.

D. Structural Observation: The visual observation of the structural system by a registered design professional for general conformance to the approved construction documents at significant construction stages and at completion of the structural system.

1.04 DESCRIPTION

A. This Section describes special inspections, special certification and structural observation of structural assemblies and components to be performed in compliance with the building code specified in Section 01410 - Regulatory Requirements.

B. The special certification and special inspections specified in this Section are in addition to the requirements specified in Section 01450 - Quality Control, and by the individual Sections.

1.05 SUBMITTALS

A. Contractor shall schedule and coordinate the submittal of Special Inspection reports and test results prepared by others.

1.06 SPECIAL INSPECTION

A. Owner will employ 1 or more special inspectors who will provide special inspections during construction.

B. Special inspector(s) shall be qualified for inspection of the particular type of materials or operations requiring special inspection.

C. Testing laboratory: Testing that is required to satisfy the requirements of special inspection will be performed by the Owner's testing laboratory as specified in Section 01450 - Quality Control.

D. Duties of Special Inspector:
   1. General: Required duties of the special inspector(s) shall be as described in Chapter 17 of the building code specified in Section 01410 - Regulatory Requirements.
   2. Reporting: Special inspector(s) shall provide reports of each inspection to the Owner and shall distribute copies of inspection reports to the Engineer and Contractor as required.
      a. Reports shall, at a minimum, include the following items:
         1) Date and time of inspection, and name(s) of individual(s) performing the inspection.
         2) Structures and areas of the structure where work or testing was observed.
         3) Discrepancies between the requirements of the Contract Documents and the work or testing observed.
         4) Other areas of deficiency in the Work.

E. Special inspections shall not be construed as fulfilling the requirements for structural observation.

F. Owner or special inspector are responsible to select materials for special inspection.
   1. It is not acceptable for Contractor to select materials for special inspection.

1.07 SPECIAL CERTIFICATION

A. Contractor shall be responsible for providing equipment that meets the special certification requirements of the building code specified in Section 01410 - Regulatory Requirements.

1.08 STRUCTURAL OBSERVATION

A. Owner will employ 1 or more registered design professionals who will provide structural observation(s) during construction.
   1. Registered design professional shall be a civil or structural engineer currently licensed as such in the state where the project is located and regularly engaged in structural design equivalent to or similar to those indicated on the Drawings.

B. Structural observations shall not be construed as fulfilling the requirements for special inspections.

PART 2 PRODUCTS (NOT USED)

PART 3 EXECUTION

3.01 SPECIAL INSPECTIONS

A. The Owner will provide special inspection of following types of work as described in in Chapter 17 of the building code as specified in Section 01410 - Regulatory Requirements wherever such work occurs unless otherwise specified.
   1. Attachment A - Structural Steel Special Inspection Schedule.
   2. Attachment B - Structural Steel Bolting Special Inspection Schedule.

3.02 SPECIAL CERTIFICATION

A. Special inspector shall examine the designated seismic system(s) specified and determine whether the designated system components, including anchorage, are consistent with the evidence of compliance submitted for special certification.

3.03 STRUCTURAL OBSERVATION

A. The following work requires structural observation in accordance with Section 1704.5 of the building code specified in Section 01455 - Regulatory Requirements.
   1. All structures in all areas:
      a. Metal Buildings Installation and Concrete Repair.

3.04 SCHEDULE

A. Contractor shall allow time necessary for special inspections and structural observation specified herein.

B. Sufficient notice shall be given so that the special inspections and structural observations can be performed. Contractor shall allow time for individuals performing special inspection and structural observation to travel to the site.

3.05 PROCEDURE

A. The special inspector will immediately notify the Engineer of any corrections required and follow notification with appropriate documentation.

B. Contractor shall not proceed until the work is satisfactory to the Engineer.

END OF SECTION

ATTACHMENT A - STRUCTURAL STEEL SPECIAL INSPECTION SCHEDULE

STRUCTURAL STEEL SPECIAL INSPECTION SCHEDULE

Verification and Inspection	Referenced Standard AISC 360-10	Frequency of Inspection[1] (During Task Listed) Continuous	 Periodic
Inspection Tasks Prior to Welding	AISC 360, Table N5.4-1		
1. Welding procedure specifications (WPSs) available.		●	
2. Manufacturer certifications for welding consumables available.		●	
3. Material identification (type/grade).			●
4. Welder identification system.			●
5. Fit-up groove welds (including joint geometry): • Joint preparation. • Dimensions (alignment, root opening, root face, bevel). • Cleanliness (condition of steel surfaces). • Tacking (tack weld quality and location). • Backing type and fit (if applicable).			●
5. Configuration and finish of access holes.			●
6. Fit-up of fillet welds: • Dimensions (alignment, gaps at root). • Cleanliness (condition of steel surfaces). • Tacking (tack weld quality and location).			●
7. Check welding equipment.			●
Inspection Tasks During Welding	AISC 360, Table N5.4-2		
8. Use of qualified welders.			●
9. Control and handling of welding consumables: • Packaging. • Exposure control.			●
10. No welding over cracked tack welds.			●
11. Environmental conditions: • Wind speed within limits. • Precipitation and temperature.			●

Verification and Inspection	Referenced Standard AISC 360-10	Frequency of Inspection(1) (During Task Listed) Continuous	 Periodic
12. WPS followed: • Settings on welding equipment. • Travel speed. • Selected welding materials. • Shielding gas type/flow rate. • Preheat applied. • Interpass temperature maintained (min/max). • Proper position (F, V, H, OH).			●
13. Welding techniques: • Interpass and final cleaning. • Each pass within profile limitations. • Each pass meets quality requirements.			●
Inspection Tasks After Welding	AISC 360, Table N5.4-3		
14. Welds cleaned.			●
15. Size, length, and location of welds.		●	
16. Welds meet visual acceptance criteria: • Crack prohibition. • Weld/base-metal fusion. • Crater cross section. • Weld profiles. • Weld size. • Undercut. • Porosity.		●	
17. Arc strikes.		●	
18. k-area.		●	
19. Backing removed and weld tabs removed (if required).		●	
20. Repair activities.		●	
21. Document acceptance or rejection of welded joint or member.		●	
Notes: (1) The "●" represents a required inspection activity for the project where it occurs.			

ATTACHMENT B - STRUCTURAL STEEL BOLTING SPECIAL INSPECTION SCHEDULE

STRUCTURAL STEEL BOLTING SPECIAL INSPECTION SCHEDULE

Verification and Inspection	Referenced Standard ASIC 360-10	Frequency of Inspection(1) (During Task Listed) Continuous	Periodic
Inspection Tasks Prior to Bolting	AISC 360, Table N5.6-1		
1. Manufacturer's certifications available for fastener materials.		●	
2. Fasteners marked in accordance with ASTM requirements.			●
3. Proper fasteners selected for the joint detail (grade, type, bolt length if threads are to be excluded from shear plane).			●
4. Proper bolting procedure selected for joint detail.			●
5. Connecting elements, including the appropriate faying surface condition and hole preparation, if specified, meet applicable requirements.			●
6. Pre-installation verification testing by installation personnel observed and documented for fastener assemblies and methods used.			●
7. Proper storage provided for bolts, nuts, washers and other fastener components.			●
Inspection Tasks During Bolting	AISC 360, Table N5.6-2		
8. Fastener assemblies, of suitable condition, placed in all holes and washers (if required) are positioned as required.			●
9. Joint brought to the snug-tight condition prior to the pretensioning operation.			●
10. Fastener component not turned by the wrench prevented from rotating.			●
11. Fasteners are pretensioned in accordance with the RCSC Specification, progressing systematically from the most rigid point toward the free edges.			●
Inspection Tasks After Bolting	AISC 360, Table N5.6-3		
12. Document acceptance or rejection of bolted connections.		●	

Notes:
(1) The "●" represents a required inspection activity for the project where it occurs.

SECTION 01500

TEMPORARY FACILITIES AND CONTROLS

PART 1 GENERAL

1.01 SUMMARY

A. Section includes:
   1. Furnishing, maintaining, and removing construction facilities and temporary controls, including temporary utilities, construction aids, barriers and enclosures, security, access roads, temporary controls, project sign, field offices and sheds, and removal after construction.

1.02 REFERENCE

A. American National Standards Institute (ANSI).

B. Occupational Safety and Health Administration (OSHA).

1.03 SUBMITTALS

A. Submit as specified in Section 01330 - Submittal Procedures.

1.04 TEMPORARY UTILITIES

A. Temporary electrical power:
   1. Arrange with local utility to provide adequate temporary electrical service.
   2. Provide and maintain adequate jobsite power distribution facilities conforming to applicable Laws and Regulations.
   3. Provide, maintain, and pay for electric power for performance of the Work.

B. Temporary electrical lighting:
   1. In work areas, provide temporary lighting sufficient to maintain lighting levels during working hours not less than lighting levels required by OSHA and state agency which administers OSHA regulations where Project is located.
   2. When available, permanent lighting facilities may be used in lieu of temporary facilities:
      a. Prior to Substantial Completion of the Work, replace bulbs, lamps, or tubes used by Contractor for lighting.

C. Temporary heating, cooling, and ventilating:
   1. Heat and ventilate work areas to protect the Work from damage by freezing, high temperatures, weather, and to provide safe environment for workers.
   2. Permanent heating system may be utilized when sufficiently completed to allow safe operation.

D. Temporary water:
   1. Pay for and construct facilities necessary to furnish potable water for human consumption and non-potable water for use during construction.
   2. Remove temporary piping and connections and restore affected portions of the facility to original condition before Substantial Completion.
   3. Pay for water used for construction prior to Substantial Completion.

E. Temporary sanitary facilities:
   1. Provide suitable and adequate sanitary facilities that are in compliance with applicable Laws and Regulations.
   2. Existing facility use is not allowed.
   3. At completion of the Work, remove sanitary facilities and leave site in neat and sanitary condition.

F. Temporary fire protection:
   1. Provide fire protection required to protect the Work and ancillary facilities.

G. First aid: Post first aid facilities and information posters conforming to requirements of OSHA and other applicable Laws and Regulations in readily accessible locations.

H. Utilities in existing facilities: As specified in Section 01140 - Work Restrictions.

I. Temporary piping systems:
   1. Submit layout drawings showing proposed routing of piping, including proposed pipe support and pipe restraint locations.
   2. Submit product data for piping, fittings, appurtenances, restraints, supports, and other components of the temporary piping system.
   3. Submit information at least 28 days prior to when each temporary piping system is scheduled to be installed and allow 14 days for review and comment.

1.05 CONSTRUCTION AIDS

A. Provide railings, kick plates, enclosures, safety devices, and controls required by Laws and Regulations and as required for adequate protection of life and property.

B. Use construction hoists, elevators, scaffolds, stages, shoring, and similar temporary facilities of ample size and capacity to adequately support and move loads.

C. Design temporary supports with adequate safety factor to ensure adequate load bearing capability:
   1. When requested, submit design calculations by professional registered engineer prior to application of loads.
   2. Submitted design calculations are for information and record purposes only.

D. Accident prevention:
   1. Exercise precautions throughout construction for protection of persons and property.
   2. Observe safety provisions of applicable Laws and Regulations.
   3. Guard machinery and equipment and eliminate other hazards.

4. Make reports required by authorities having jurisdiction, and permit safety inspections of the Work.
5. Before commencing construction work, take necessary action to comply with provisions for safety and accident prevention.

E. Barricades:
1. Place barriers at ends of excavations and along excavations to warn pedestrian and vehicular traffic of excavations.
2. Provide barriers with flashing lights after dark.
3. Keep barriers in place until excavations are entirely backfilled and compacted.
4. Barricade excavations to prevent persons from entering excavated areas in streets, roadways, parking lots, treatment plants, or other public or private areas.

F. Warning devices and barricades: Adequately identify and guard hazardous areas and conditions by visual warning devices and, where necessary, physical barriers:
1. Provide devices in accordance with minimum requirements of OSHA and State agency which administers OSHA regulations where Project is located.

G. Hazards in public right-of-way:
1. Comply with local jurisdiction standards and requirements for right-of-way barricades and other safety devices.
2. Mark at reasonable intervals, trenches, and other continuous excavations in public right-of-way, running parallel to general flow of traffic, with traffic cones, barricades, or other suitable visual markers during daylight hours:
a. During hours of darkness, provide markers with torches, flashers, or other adequate lights.
3. At intersections or for pits and similar excavations, where traffic may reasonably be expected to approach head on, protect excavations by continuous barricades:
a. During hours of darkness, provide warning lights at close intervals.

H. Hazards in protected areas: Mark or guard excavations in areas from which public is excluded, in manner appropriate for hazard.

I. Above grade protection: On multi-level structures, provide safety protection that meets requirements of OSHA and State agency which administers OSHA regulations where Project is located.

J. Protect existing structures, trees, shrubs, and other items to be preserved on Project site from injury, damage, or destruction by vehicles, equipment, worker or other agents with substantial barricades or other devices commensurate with hazards.

1.06 SECURITY

A. Make adequate provision for protection of the work area against fire, theft, and vandalism, and for protection of public against exposure to injury.

1.07 ACCESS ROADS

A. General:
   1. Build and maintain access roads to and on site of the Work to provide for delivery of material and for access to existing and operating plant facilities on site.
   2. Build and maintain dust free roads which are suitable for travel at 20 miles per hour.

B. Off-site access roads:
   1. Build and maintain graded earth roads.
   2. Build roads only in public right-of-way or easements obtained by Owner.
   3. Obtain rights-of-way or easements when electing to build along other alignment.

C. On-site access roads:
   1. Maintain access roads to storage areas and other areas to which frequent access is required.
   2. Maintain similar roads to existing facilities on site of the Work to provide access for maintenance and operation.
   3. Protect buried vulnerable utilities under temporary roads with steel plates, wood planking, or bridges.
   4. Maintain on-site access roads free of mud.
   5. Provide controls to prevent vehicles leaving the site from tracking mud off the site onto the public right-of-way.

1.08 TEMPORARY CONTROLS

A. Dust control:
   1. Prevent dust nuisance caused by operations, unpaved roads, excavation, backfilling, demolition, or other activities.
   2. Control dust by sprinkling with water, use of dust palliatives, modification of operations, or other means acceptable to agencies having jurisdiction.

B. Noise control:
   1. Comply with noise and work hours regulations by local jurisdiction.
   2. In or near inhabited areas, particularly residential, perform operations in manner to minimize noise.
   3. In residential areas, take special measures to suppress noise during night hours.

C. Mud control:
   1. Prevent mud nuisance caused by construction operations, unpaved roads, excavation, backfilling, demolition, or other activities.

1.09 REMOVAL

A. Remove temporary facilities and controls before inspection for Substantial Completion or when directed.

B. Clean and repair damage caused by installation or use of temporary facilities.

C. Remove underground installations to minimum depth of 24 inches and grade to match surrounding conditions.

D. Restore existing facilities used during construction to specified or original condition.

1.10 TEMPORARY PROCESS PIPING SYSTEMS

A. Provide piping, appurtenances, and other materials as required to provide temporary piping systems as specified in this Section, as indicated on the Drawings, and as needed to perform the Work.

B. Provide field route piping as needed and as field conditions dictate, unless otherwise indicated on the Drawings, and determine appropriate lengths of piping and quantity/type of pipe fittings needed to construct temporary piping system. Do not block access points such as stairs, doors, and walkways to existing facilities unless approved in writing by the Owner.

C. Restrain piping at valves and at fittings where piping changes direction, changes sizes, and at ends:
   1. When piping is buried, use concrete thrust block or mechanical restraints.
   2. When piping is exposed or under water, use mechanical or structural restraints.
   3. Determine thrust forces by multiplying the nominal cross sectional area of the piping by the operating pressure of the piping.

D. Install temporary piping systems in a manner that will not damage existing or new facilities.

E. Piping material, including gaskets: Suitable for the sanitary sewage requiring temporary piping, unless indicated otherwise.

F. Temporary piping includes, but is not limited to, the piping services:
   1. From the headworks influent riser to Aeration Basin No. 1 and No. 2 ductile iron pipes, as indicated on the Drawings.

G. After temporary piping system is no longer required:
   1. Remove temporary piping system as indicated on the Drawings.
   2. Clean and repair damage caused by installation or use of temporary piping system.
   3. Restore existing facilities to original condition.

PART 2 PRODUCTS (NOT USED)

PART 3 EXECUTION (NOT USED)

END OF SECTION

SECTION 01600

PRODUCT REQUIREMENTS

PART 1 GENERAL

1.01 SUMMARY

A. Section includes: Requirements for tangible materials, raw or manufactured, that become part of the project.

1.02 REFERENCES

A. NSF International (NSF):
   1. 60 - Technical Requirements.

1.03 DEFINITIONS

A. Certificates: Documents that the work is in accordance with the Contract Documents.

B. Extra stock materials: Extra stock materials provided for the Owner's use in facility operation and maintenance.

C. Manufacturer's instructions:
   1. Stipulations, directions, and/or recommendations issued form by the manufacturer of the product addressing handling, installation, erection, and/or application of the product.

D. Products:
   1. Raw materials, finished goods, equipment, systems, and shop fabrications.

E. Product data:
   1. Public information about the product which is found in the manufacturer's catalogs or on their web site including catalog pages, data sheets, bulletins, layout drawings, exploded views, and brochures.

F. Samples:
   1. Full-size actual products or pieces of products intended to illustrate the products to be incorporated into the project. Sample submittals are often necessary for such characteristics as colors, textures, and other appearance issues.

G. Schedules:
   1. Product parts and materials lists.

H. Shop drawings:
   1. As defined in the General Conditions and Supplementary Conditions.

2. Shop drawings are prepared specifically for the project to illustrate details, dimensions, and other data necessary for satisfactory fabrication or construction that are not shown in the contract documents. Shop drawings could include graphic line-type drawings and single-line diagrams.

I. Spare parts:
   1. Duplicate parts necessary to replace a damaged or worn part of the product.
   2. Consumables such as operating fluids.

J. Special tools:
   1. Special wrenches, gauges, circuit setters, and other similar devices required for the proper operation or maintenance of a system that would not normally be in the Owner's tool kit and that have been specifically made for use on a product for assembly, disassembly, repair, or maintenance.

PART 2 PRODUCTS

2.01 GENERAL REQUIREMENTS

A. Provide products by same manufacturer when products are of similar nature, unless otherwise specified.

B. Provide like parts of duplicate units that are interchangeable.

C. Provide equipment or product that has not been in service prior to delivery, except as required by tests.

D. Provide products produced by manufacturers regularly engaged in the production of these products.

E. Provide products that bear approvals and labels as specified.

2.02 MATERIAL

A. Dissimilar metals:
   1. Separate contacting surfaces with dielectric material.
   2. Neoprene, bituminous impregnated felt, heavy bituminous coatings, nonmetallic separators or washers, or other materials as specified.

B. Edge grinding:
   1. Sharp projections of cut or sheared edges of ferrous metals which are not to be welded shall be ground to a radius required to ensure satisfactory paint adherence.

C. Use anti-galling compound on threads of stainless steel fasteners during factory assembly.

D. Provide anti-galling compound with stainless steel fasteners shipped for field assembly.

E. Provide new pipe manufactured for the project, not from manufacturer's inventory, under the following conditions:
   1. Pipes 16-inch diameter and larger.
   2. Pipe manufactured more than 6 months prior to delivery if the pipe material or its coating is subject to UV degradation.
   3. Ductile iron pipe with cement-mortar lining manufactured more than 6 months prior to delivery to the project.
   4. Steel pipe 6-inch diameter and larger.

F. Mark each length of pipe in accordance with applicable standards.

2.03 PRODUCT SELECTION

A. Provide products with Engineer approved submittals.

B. When products are specified by standard or specification designations of technical societies, organizations, or associations only, provide products that meet or exceed reference standard and Specifications.

C. When products are specified with names of manufacturers but no model numbers or catalog designations, provide Products by one of named manufacturers that meet or exceed Specifications.

D. When products are specified with names of manufacturers and model numbers or catalog designations, provide Products with model numbers or catalog designations by one of named manufacturers.

E. When products are specified with names of manufacturers, but with brand or trade names, model numbers, or catalog designations by one manufacturer only, provide:
   1. Products specified by brand or trade name, model number, or catalog designation.
   2. Products by one of named manufacturers proven, in accordance with requirements for an "or equal", including Engineer’s approval, to meet or exceed quality, appearance and performance of specified brand or trade name, model number, or catalog designation.

F. When Products are specified with only one manufacturer followed by "or Equal," provide:
   1. Products meeting or exceeding Specifications by specified manufacturer.
   2. Engineer deemed "or equal" evidenced by an approved shop drawing or other written communication.

G. When Products are specified by naming 2 or more manufacturers with 1 manufacturer as a "Basis of Design":
   1. Any of the named manufacturers can be submitted.
   2. If the product submitted requires a change in the scope (dimensions, configuration, physical properties, etc.), schedule (longer lead time), or budget, the Contractor must submit a substitution request.

2.04 SHIPMENT

A. Requirements prior to shipment of equipment:
   1. Engineer approved shop drawings.
   2. Engineer approved Manufacturer's Certificate of Source Testing as specified in the Technical Sections .
   3. Draft operations and maintenance manuals, as specified in Section 01782 - Operation and Maintenance Manuals, when required by specifications.

B. Prepare products for shipment by:
   1. Tagging or marking to agree with delivery schedule or shop drawings.
   2. Including complete packing lists and bills of material with each shipment.
   3. Packaging products to facilitate handling and protection against damage during transit, handling, and storage.
   4. Securely attach special instructions for proper field handling, storage, and installation to each piece of equipment before packaging and shipment.

C. Transport products by methods that avoid product damage.

D. Deliver products in undamaged condition in manufacturer's unopened containers or packaging.

2.05 SPARE PARTS, MAINTENANCE PRODUCTS, AND SPECIAL TOOLS

A. Provide spare parts and maintenance products as required by Technical Sections.
   1. Submit completed Attachment A - Spare Parts, Maintenance Products, and Special Tools Inventory List.

B. Provide one set of special tools required to install or service the equipment.

C. Box, tag, and clearly mark items.

D. Contractor is responsible for spare parts, maintenance products, and special tools until acceptance by Owner.

PART 3 EXECUTION

3.01 DELIVERY AND HANDLING

A. Handle equipment in accordance with manufacturer's instructions.

B. Provide construction equipment and personnel to handle products by methods to prevent soiling or damage.

C. Upon delivery, promptly inspect shipments:
   1. Verify compliance with Contract Documents, correct quantities, and undamaged condition of products.
   2. Acceptance of shipment does not constitute final acceptance of equipment.

D. Spare parts, maintenance products, special tools.
   1. Immediately store in accordance with the manufacturer's instructions.

2. Store spare parts, maintenance products, and special tools in enclosed, weather-proof, and lighted facility during the construction period.
    a. Protect parts subject to deterioration, such as ferrous metal items and electrical components with appropriate lubricants, desiccants, or hermetic sealing.
3. With Owner's written request for advanced delivery of spare parts, maintenance products, and special tools.
    a. Deliver requested items and deduct them from the inventory list.
    b. Provide transmittal documentation.
4. Store large items individually:
    a. Weight: Greater than 50 pounds.
    b. Size: Greater than 24 inches wide by 18 inches high by 36 inches long.
    c. Clearly labeled:
        1) Equipment tag number.
        2) Equipment manufacturer.
        3) Subassembly component, if appropriate.
        4) Store smaller items in spare parts box:
    d. Weight: Less than 50 pounds.
    e. Size: Less than 24 inches wide by 18 inches high by 36 inches long.
    f. Clearly labeled:
        1) Equipment tag number.
        2) Equipment manufacturer.
        3) Subassembly component, if appropriate.
        4) Spare parts and special tools box:
    g. Box material: Waterproof, corrosion resistant.
    h. Hinged cover:
        1) Locking hasp.
    i. Spare parts inventory list taped to underside of cover.
    j. Clearly labeled:
        1) The words “Spare Parts and/or Special Tools”.
        2) Equipment tag number.
        3) Equipment manufacturer.
        4) Subassembly component, if appropriate.

3.02 STORAGE AND PROTECTION

A. Immediately store and protect products until installed in Work.

B. Furnish covered, weather-protected storage structures providing a clean, dry, noncorrosive environment for mechanical equipment, valves, architectural items, electrical and instrumentation equipment and special equipment to be incorporated into this project.
    1. Storage of equipment shall be in strict accordance with the “instructions for storage” provided by the manufacturer.
        a. Including connection of heaters, lubrication, rotating shafts, etc.
    2. The Contractor shall furnish a copy of the manufacturer’s instructions for storage to the Engineer prior to storage of equipment and materials.

C. Store products with seals and legible labels intact.

D. Protect painted or coated surfaces against impact, abrasion, discoloration, and damage.
   1. Repaint or recoat damaged painted or coated surfaces.

E. Exterior storage of fabricated products:
   1. Place on aboveground supports that allow for drainage.
   2. Cover products subject to deterioration with impervious sheet covering.
   3. Provide ventilation to prevent condensation under covering.

F. Store moisture sensitive products in watertight enclosures.

G. Store loose granular materials on solid surfaces in well-drained area.
   1. Prevent materials mixing with foreign matter.
   2. Provide access for inspection.

H. When needed and approved by the Engineer, offsite storage location shall be within 20 miles of the project site.
   1. Provide proof of insurance coverage for products stored offsite.

I. Payment will not be made for equipment and materials improperly stored or stored without providing Engineer with the manufacturer's instructions for storage.

J. Provide an equipment log and stored products log with monthly pay applications.
   1. Data includes as a minimum: The storage location, equipment or product identification, date stored, date of inspection/maintenance, date removed from storage, copy of manufacturer’s recommended storage guidelines, description of inspection/maintenance activities performed, and signature of party performing inspection/maintenance.

3.03 INSTALLATION

A. Inspect hardware or fittings prior to product installation.

B. Use anti-galling compound on stainless steel threads used for field assembly.

3.04 PROTECTION AFTER INSTALLATION

A. Provide substantial coverings as necessary to protect installed products from damage from traffic and subsequent construction operations.
   1. Remove covering when no longer needed.
   2. Replace corroded, damaged, or deteriorated equipment, product, or parts before acceptance of the project.

B. Update equipment log with monthly pay applications.
   1. Data includes as a minimum: Description of maintenance activities performed in accordance with the manufacturer’s recommendation and industry standards and signature of party performing maintenance.

END OF SECTION

ATTACHMENT A - SPARE PARTS, MAINTENANCE PRODUCTS, AND SPECIAL TOOLS INVENTORY LIST

SPARE PARTS, MAINTENANCE PRODUCTS, AND SPECIAL TOOLS INVENTORY LIST

Owner: _____ **Date:** _____

Contractor: _____ **Project No.:** _____

Project Name: _____

Inventory List				
Spec Number: _____		Spec Title _____		
Equipment Tag No.: _____		Equipment Manufacturer: _____		
Quantity	**Subassembly Component**	**Description**	**Manufacturer's Part Number**	**Storage Location**

SECTION 01722

FIELD ENGINEERING

PART 1 GENERAL

1.01 SUMMARY

A. Section includes: Field engineering to establish lines and grades for the Work.

1.02 SUBMITTALS

A. Submit as specified in Section 01330 - Submittal Procedures.

B. Qualifications of the professional land surveyor or licensed civil engineer with the authority to provide land surveying in Florida that will be performing the field engineering.

PART 2 PRODUCTS (NOT USED)

PART 3 EXECUTION

3.01 SURVEY REFERENCE POINTS

A. Basic reference line, a beginning point on basic reference line, points with referenced coordinates, and a benchmark will be provided by Owner.

B. From these reference points, establish other control and reference points as required to properly lay out the Work.

C. Locate and protect control points prior to starting site work, and preserve permanent reference points during construction:
   1. Make no changes or relocations without prior written notice.
   2. Replace Project control point, when lost or destroyed, in accordance with original survey control.

D. Set monuments for principal control points and protect them from being disturbed and displaced:
   1. Re-establish disturbed monuments.
   2. When disturbed, postpone parts of the Work that are governed by disturbed monuments until such monuments are re-established.

3.02 PROJECT SITE SURVEY REQUIREMENTS

A. Perform verifications and checking in accordance with industry standard surveying practice.

B. Maintain complete, accurate log of control points and survey.

C. Affix civil engineer's or professional land surveyor's signature and license number to Record Drawings to certify accuracy of information shown.

D. Establish a minimum of 2 permanent benchmarks on site reference to data established by survey control points.

E. Record permanent benchmark locations with horizontal and vertical data on Project Record Documents.

3.03 CONSTRUCTION STAKES, LINES, AND GRADES

A. Execute the Work in accordance with the lines and grades indicated.

B. Make distances and measurements on horizontal planes, except elevations and structural dimensions.

3.04 QUALITY CONTROL

A. Accuracy of stakes, alignments, and grades may be checked randomly by Engineer:
   1. Notice of when checking will be conducted will be given.
   2. When notice of checking is given, postpone parts of the Work affected by stakes, alignments, or grades to be checked until checked.
   3. Engineer's check does not substitute or complement required field quality control procedures.

3.05 RECORD DOCUMENTS

A. Prepare and submit Record Documents as specified in Section 01770 - Closeout Procedures.

END OF SECTION

SECTION 01738

SELECTIVE ALTERATIONS AND DEMOLITION

PART 1 GENERAL

1.01 SUMMARY

A. Section includes:
   1. Cutting or modifying of existing and new work.
   2. Partial demolition of structures.
   3. In-place abandonment of pipe.

1.02 REFERENCES

A. American National Standards Institute (ANSI):
   1. A10.6 - Safety and Health Program Requirements for Demolition Operations.

B. International Concrete Repair Institute (ICRI):
   1. Guideline No. 310.2R - Selecting and Specifying Concrete Surface Preparation for Sealers, Coatings, Polymer Overlays, and Concrete Repair.
   2. Guideline No. 310.3R - Guide for the Preparation of Concrete Surfaces for Repair Using Hydrodemolition Methods.

1.03 DEFINITIONS

A. Chipping hammer: A hand-operated electrical or pneumatic demolition device for removal of hardened concrete or masonry materials having a weight of less than 15 pounds and an impact frequency of greater than 2,000 blows/minute.

B. Concrete breaker: A hand-operated electrical or pneumatic demolition device for removal of hardened concrete or masonry materials having a weight greater or impact frequency less than the limits defined for a chipping hammer.

C. Coring equipment: Non-impact rotary drill with diamond cutting edges.

D. Heavy abrasive blast: Cleaning procedure by which various abrasives materials, or steel shot, are forcibly propelled by high pressure against a surface to remove loose material and produce a concrete surface roughened to ICRI Surface Profile CSP-7, or higher, as specified in ICRI 301.3R.

E. Salvage material: Materials removed from existing facilities and stored for Owner's future reuse.

1.04 DESCRIPTION OF WORK

A. The work includes demolition of the existing metal building that sits on top of the headworks structure, some odor ducts, and first floor influent riser piping as indicated on the drawings. To allow for the proposed headworks improvements, coring into the influent concrete channel and some aluminum grating will be performed as indicated on the drawings.

B. These facilities may be occupied and/or operational. Satisfactory completion of the work will require that the Contractor plan activities carefully to work around unavoidable obstacles and to maintain overall stability of structures and structural elements. It will further require restoration of existing facilities, utilities, and structures that are to remain in place and that are damaged by demolition or removal operations.

1.05 SUBMITTALS

A. General:
   1. Submit specified in Section 01330 - Submittal Procedures.

B. Shop drawings: Include:
   1. The location of all embedded items shall be documented using diagrams and/or other media that clearly show dimensions and locations of existing structural elements, existing embedded items and any new embedded items and their relationship to each other.

C. Submittals for information only:
   1. Permits and notices authorizing demolition.
   2. Certificates of severance of utility services.
   3. Permit for transport and disposal of debris.
   4. Selective Demolition Plan.
   5. Pipe Abandonment Plan.

D. Quality assurance submittals:
   1. Qualifications of non-destructive testing agency/agencies.

E. Project record documents.

F. Drawings and/or other media documenting locations of service lines and capped utilities.

1.06 QUALITY ASSURANCE

A. Qualifications:
   1. Assign relocation, removal, cutting, coring and patching to trades and workers qualified to perform the Work in manner that causes the least damage and that provides means of returning surfaces to an appearance at least equal to that of the surrounding areas unaffected by the Work.
   2. Non-destructive testing agencies: Minimum of 5 years' experience performing non-destructive testing for location of steel reinforcement in existing concrete under conditions similar to that required for this Work.

1.07 SEQUENCING

A. Perform Work in sequences and within times specified in Section 01140 - Work Restrictions.

B. Coordinate the Work with operation of the facility:
   1. Do not begin alterations of designated portions of the Work until specific permission for activities in each area has been granted by Owner in writing.
   2. Complete Work as quickly and with as little delay as possible.

C. Operational functions of the facility that are required to be performed to facilitate the Work will be performed by facility personnel only.

D. Owner will cooperate to assist in expediting the Work.

E. When necessary for the proper operation or maintenance of portions of the facility, reschedule operations so the Work will not conflict with required operations or maintenance.

1.08 REGULATORY REQUIREMENTS

A. Dispose of debris in accordance with governing regulatory agencies.

B. Comply with applicable air pollution control regulations.

C. Obtain permits for building demolition, transportation of debris to disposal site and dust control.

1.09 PROJECT CONDITIONS

A. Do not interfere with use of adjacent structures and elements of the facility not subject to the Work described in this Section. Maintain free and safe passage to and from such facilities.

B. Provide, erect, and maintain barricades, lighting, guardrails, and protective devices as required to protect building occupants, general public, workers, and adjoining property:

C. Prevent movement, settlement, or collapse of structures:
   1. Cease operations and notify Engineer immediately when safety of structures appears to be endangered. Take precautions to properly support structure. Do not resume operations until safety is restored.
   2. Assume liability for movement, settlement, or collapse. Promptly repair damage.

D. Unknown conditions:
   1. The drawings may not represent all conditions at the site and adjoining areas. Compare actual conditions with drawings before commencement of Work.
   2. Existing utilities and drainage systems below grade are located from existing documents and from surface facilities such as manholes, valve boxes, area drains, and other surface fixtures.

3. If existing active services encountered are not indicated or otherwise made known to the Contractor and interfere with the permanent facilities under construction, notify the Engineer in writing, requesting instructions on their disposition. Take immediate steps to ensure that the service provided is not interrupted, and do not proceed with the Work until written instructions are received from the Engineer.

PART 2 PRODUCTS (NOT USED)

PART 3 EXECUTION

3.01 EXAMINATION

A. Prior to beginning selective demolition operations, perform a thorough inspection of the facility and site.
   1. Report to the Engineer defects, structural damage, and deterioration of existing construction to remain in place.

B. Examine areas affected by the Work and verify the following conditions prior to commencing demolition:
   1. Disconnection of utilities as required.
   2. Verify that utilities serving occupied or active portions of surrounding facilities will not be disturbed, except as otherwise indicated.

C. If unsatisfactory conditions exist, notify the Engineer, and do not begin demolition operations until such conditions have been corrected.

3.02 PREPARATION

A. Plan and organize Work to minimize inconvenience to adjacent buildings and to plant operations.

B. Selective Demolition Plan:
   1. Prepare and submit a comprehensive selective demolition plan for the Work including the following elements, at a minimum:
      a. Proposed sequence, methods, temporary support, and equipment for demolition, removal, and disposal of portions of structure(s).
   2. Plan shall be signed and sealed by a Professional Structural Engineer registered in the state where Project is located.
   3. Submit plan a minimum 4 weeks before demolition is scheduled to begin.

C. Protection:
   1. Erect weatherproof closures to protect the interior of facilities and elements or equipment that are not designed for exposure to the weather.
   2. Provide temporary heat, cooling, and humidity control as necessary to prevent damage to existing and new equipment and construction.
   3. Maintain existing exiting paths and/or provide new paths in compliance with Building Code requirements.

4. Erect and maintain dustproof partitions as required to prevent spread of dust, to other parts of building. Maintain negative pressure in the area where the Work is being performed to prevent the accidental spread of dust and to minimize the spread of fumes related to the Work.
5. Upon completion of Work, remove weatherproof closures and dustproof partitions.
6. Repair damaged surfaces to match adjacent surfaces.
7. Provide and maintain protective devices to prevent injury from falling objects.
8. Locate guardrails in stairwells and around open shafts to protect workers. Post clearly visible warning signs.
9. Protect the following from damage or displacement during Work.
    a. Benchmarks and survey points.
    b. Existing construction that will remain in place.
    c. Trees and landscaping designated to remain in place.
10. Carefully remove designated materials and equipment to be salvaged by Owner or reinstalled.
11. Store and protect materials and equipment to be reinstalled.

D. Layout:
1. The limits of selective demolition are indicated on the Drawings. Confine demolition operations within the limits indicated on the Drawings.
2. Lay out demolition and removal work at the site and coordinate with related Work for which demolition and removal is required.
3. Clearly mark the extent of structural elements to be removed on the actual surfaces that will be removed.
4. Arrange for Engineer's inspection of the lay out extents.
5. Do not begin demolition/removal operations until the lay out markings have been reviewed by the Engineer.

3.03 DEMOLITION

A. General:
1. Perform demolition work in accordance with ANSI A10.6.
2. Demolish designated portions of structures and appurtenances in orderly and careful manner in accordance with the Selective Demolition Plan.
3. Conduct demolition and removal work in a manner that will minimize dust and flying particles.
4. Remove materials carefully, to the extent indicated and as required.
    a. Provide neat and orderly junctions between existing and new materials.
    b. Use methods that terminate surfaces in straight lines at natural points of division.
5. Do not remove anything beyond the limits of Work indicated without prior written authorization from the Engineer.
    a. If in doubt about whether to remove an item, obtain written authorization from the Engineer prior to proceeding.
6. Perform work so as to provide the least interference and most protection to existing facilities to remain.
7. Demolished materials:
    a. Assume possession of materials unless otherwise indicated on the Drawings or specified.

b. Remove demolished materials from site at least weekly and dispose of them in accordance with Laws and Regulations.
c. Do not burn or bury materials on site.

B. Demolition of concrete and masonry:
1. Demolish concrete in small sections.
a. Perform demolition with small tools as much as possible.
b. Blasting with explosive charges is not permitted.
2. Sawcut concrete to establish the edges of demolition, wherever possible.
a. Do not use a concrete breaker within 6 inches of reinforcing or structural metals that are designated to remain in place.
b. At edges that are not sawcut, remove the final 6 inches of material with a chipping hammer as defined herein. At surfaces where material is removed with a chipping hammer, follow with a heavy abrasive blast to remove all loose material and microcracking.
c. Alternate techniques to remove concrete may be used if acceptable to the Engineer; however, techniques other than those deemed by ICRI Guideline No. 310.2R to provide a low risk of introducing microcracking will require a subsequent procedure to remove loose material and microcracked.
3. At locations indicated on the Drawings where the existing reinforcing is to be preserved, remove concrete using methods that do not damage the reinforcing. Use one of the following techniques:
a. Hydrodemolition techniques as outlined in ICRI Guideline No. 310.3R.
b. Chipping hammer, as defined herein, followed by heavy abrasive blast to remove all loose material and microcracking at remaining surfaces impacted by the chipping hammer.
c. Alternate methods may be used, only when accepted in advance by the Engineer.
d. For all methods, provide a small completed area for Engineer's review and acceptance. If the proposed method, in the opinion of the Engineer, damages the reinforcing, revise the removal method to remove the concrete with a less aggressive technique to protect the reinforcing.

C. Sizing of openings in existing concrete or masonry:
1. Make openings large enough to permit final alignment of pipe and fittings without deflections, but without oversizing.
2. Allow adequate space for packing around pipes and conduit to ensure watertightness.
3. If the Engineer deems the opening to be insufficient in size to accomplish this criteria, remove additional material using the procedures outlined in this Section.

D. Cutting openings in existing concrete or masonry:
1. Do not allow saw cuts to extend beyond limits of openings.
2. Create openings by the following method or other means acceptable to the Engineer that prevents over-cutting of member at corners:
a. Core-drill through slab or wall at corners, being careful not to damage materials beyond the area to be removed.
b. Saw cut completely through the member, between the core holes at the corners.

c. As an alternate to sawcutting through the member, score the edges of the opening with a saw to a 1-inch depth.
   1) Provide score on both surfaces (when accessible).
   2) Remove concrete or masonry to within 6 inches of material to remain with a concrete breaker.
   3) Remove the remaining material with a chipping hammer.
d. Remove the remaining material at the corners left by the core-drilling with a chipping hammer.

2. Prevent debris from falling into adjacent tanks or channels in service or from damaging existing equipment and other facilities.

E. In-place Abandonment of Pipe:
1. Abandoned pipe in-place as indicated on the Drawings.
2. Clean buried or exposed solids service piping to a condition free of residual.
   a. Solids service piping includes: raw wastewater (RAW WW), primary sludge or scum (PS), mixed liquor (ML), return activated sludge (RAS), waste active sludge (WAS), surface waste activated sludge (SWAS), thickened waste activated sludge (TWAS), digested sludge (DS), centrate, or other similar solids service subject to biological degradation, etc.
3. Provide closure of abandoned pipe cut ends as indicated on the Drawings using one of the following methods:
   a. Install cap.
   b. Install plug.
   c. Install drain valves, pressure relief valves, vents, etc.

F. Immediately upon discovery, remove and dispose of contaminated, vermin-infested, or dangerous materials using safe means that will not endanger health of workers and public.

G. Backfill open pits and holes caused by demolition.

H. Remove demolished materials, tools, and equipment upon completion of demolition.

3.04 RESTORATION

A. General:
1. Repair damage caused by demolition to conditions equal to those that existed prior to beginning of demolition.
   a. Patch and replace portions of existing finished surfaces that are damaged, lifted, and discolored. Refinish patched portion surfaces in a manner which produces uniform color and texture to entire surface, and that matches color and texture of adjacent surfaces.
   b. When existing finish cannot be matched, refinish entire surface to nearest change of plane where angle of change exceeds 45 degrees.
2. The cost of repairs shall be at the Contractor's expense at no increase in the Contract Price.
3. When new construction abuts or finishes flush with existing construction, make smooth transitions. Match finish of existing construction.
4. Where partitions are removed, patch floors, walls, and ceilings with finish materials that match existing materials.

5. Where removal of partitions results in adjacent spaces becoming one, rework floors, walls, and ceilings to provide smooth planes without breaks, steps, or bulkheads.
    a. Where change of plane between adjacent surfaces exceeds 2 inches, request and obtain instructions for making transition from Engineer.
        1) Refinish door surfaces and edges as necessary.
6. Trim existing doors as necessary to clear new floors.
7. Match patched construction with adjacent construction in texture and appearance so that patch or transition is invisible at 5-foot distance.
8. When finished surfaces are cut so that smooth transition is impossible, terminate existing surface in neat manner along straight line at natural line of division and provide appropriate trim.

B. Restore existing concrete reinforcement as follows:
    1. Where existing reinforcement is to be incorporated into the new Work, protect, clean, and extend into new concrete.
    2. Where existing reinforcement is not to be retained, cut off as follows:
        a. Where new concrete joins existing concrete at the removal line, cut reinforcement flush with concrete surface at the removal line.
        b. Where concrete surface at the removal line will become the finished surface, cut reinforcement 2 inches below the surface, paint ends with epoxy, and patch holes with dry pack mortar.

C. Restore areas affected by removal of existing equipment, equipment pads and bases, piping, supports, electrical panels, electric devices, conduits, and fasteners so little or no evidence of the previous installation remains:
    1. After removal of piping, conduit, fasteners, and other construction, fill areas in existing concrete and masonry floors, walls, and ceilings with non-shrink grout and finish smooth.
    2. Remove concrete bases for equipment and supports by:
        a. Saw cutting clean, straight lines with a depth equal to the concrete cover over reinforcement minus 1/2 inch below finished surface.
            1) Do not cut existing reinforcement in slab.
        b. Chip concrete within scored lines.
        c. Cut exposed reinforcing steel and anchor bolts that will project above the repaired surface.
        d. Patch with non-shrink grout to match adjacent grade and finish.
    3. Terminate abandoned piping and conduits with blind flanges, caps, or plugs.
    4. Where existing fasteners are not to be retained, cut off as follows:
        a. Where new concrete joins existing concrete at the removal line, cut fasteners flush with concrete surface at the removal line.
        b. Where concrete surface at the removal line will become the finished surface, cut fasteners 1 inch below the surface, paint ends with epoxy, and patch holes with epoxy grout.

3.05 FIELD QUALITY CONTROL

A. Do not proceed with demolition without Engineer's inspection of lay out.

B. Do not deviate from the submitted demolition plan without notifying the Engineer prior to Work.

END OF SECTION

SECTION 01756

COMMISSIONING

PART 1 GENERAL

1.01 SUMMARY

A. Section includes: Requirements for the Planning, Commissioning, And Process Start-up phases for the Project equipment/system and/or facility.

B. Related sections:
   1. The Contract Documents are complementary; what is called for by one is as binding as if called for by all.
   2. It is the Contractor's responsibility for scheduling and coordinating the Work of subcontractors, suppliers, and other individuals or entities performing or furnishing any of Contractor's Work.

1.02 DEFINITIONS

A. Clean Water Facility Testing – Testing of complete facility utilizing clean water for purposes of confirming extended equipment/system operation prior to process start-up.

B. Commissioning – The process of testing the installation for compliance with contract requirements and demonstrating, through documented verification, that the project has successfully met the Contractual requirements and the Project is ready for Process Start-up.

C. Component – A basic building block of equipment, subsystems, and systems that requires installation or functional testing but does not have an electrical connection or internal electronics. (Examples: filter effluent piping and manual isolation valves).

D. Device – A basic building block of equipment, subsystems, and systems that requires installation or functional testing and does have an electrical connection or internal electronics. (Examples: filter level transmitter or water pump pressure transmitter).

E. Equipment – An assembly of component(s) and devices(s) that requires installation or functional testing. (Examples: Pump, motor, VFD, Ozone Generator, UV Disinfection System, etc.).

F. Facility – A grouping of process areas, systems, subsystems, equipment, components, and devices (Example: Treatment Plant, Pump Station, etc.).

G. Functional Testing – Testing performed on a completed subsystem to demonstrate that equipment/system meets manufacturers' calibration and adjustment requirements and other requirements as specified. Functional testing includes operating equipment/system manually in local, manually in remote (or remote manual), and automatically in remote (in remote auto).

H. Installation Testing – Testing to demonstrate that subsystem component (piping, power, networks, devices, etc.) is ready and meet the project requirements in advance of functional testing. Installation testing also includes manufacturers' certification of installation and other requirements as specified to prepare equipment/system for Functional Testing. Also referred to as Field Acceptance Testing.

I. Instrumentation and Controls Performance Testing – Testing to prove the performance of the Instrumentation Process Control system by operating for an extended time period.

J. Manufacturer's Certificate of Source Testing – When applicable, the form is used during Source Testing for the manufacturer to confirm that the applicable source tests have been performed and results conform to the Contract Documents. The form is provided at the end of this Section.

K. Manufacturer's Certificate of Installation and Functionality Compliance – The form is used during Installation Testing and Functional Testing. It is submitted at the end of Functional Testing to confirm that the equipment/system is installed in conformance with the Contract Documents and that it meets the Functional Testing requirements defined in the Contract Documents. The form is provided at the end of this Section.

L. Phases – The work activities of testing, training, facility commissioning, and process start-up are grouped into the 3 distinct phases as defined in the table below.

Planning Phase	**Commissioning Phase**	**Process Start-Up Phase**
Owner Training Plan and Schedule	Source Testing	Process Start-up
Commissioning and Process Start-up Schedule	Owner Training	Process Operational Period

M. Process Area – A grouping of systems, subsystems, equipment, components, and devices that divide a facility into functional areas. (Examples: Filter Process Area or Chemical Area).

N. Process Operational Period – A period of time after completion of the Process Start-up set aside for final Operational Testing to verify facility performance meets the Contract Document requirements. This period may specifically limit other construction activities.

O. Product – A system, subsystem, or component.

P. Process Start-up – Activities conducted after commissioning that are necessary to place systems or process areas into operational service.

Q. Source Testing – Quality control testing conducted at the source or point of assembly to demonstrate components, devices, equipment/systems, and software meets specified performance requirements prior to shipment. Also referred to as factory testing or factory acceptance testing (FAT).

R. Subsystem – A building block of systems made up from a grouping of components, devices, and equipment that perform a definable function. (Examples: Filter No. 1 Backwash Subsystem, Sedimentation Basin No. 1 Hoseless Sludge Removal Subsystem).

S. System – A grouping of subsystems, equipment, components, and devices that perform a definable function. (Examples: Filter No. 1, Sedimentation Basin).

1.03 SERVICES OF MANUFACTURER'S REPRESENTATIVES

A. Qualification of manufacturer's representative as specified in the Contract Documents technical sections include the following:
   1. Authorized representative of the manufacturer, factory trained, and experienced in the technical applications, installation, operation, and maintenance of respective equipment/system with full authority by the equipment/system manufacturer to issue the certifications required of the manufacturer.
   2. Competent, experienced technical representatives of equipment/system manufacturers for assembly, installation, testing guidance, and training.
   3. Additional qualifications may be specified in the individual Specification sections.
   4. Submit qualifications of the manufacturer's representative no later than 30 days in advance of required observations.
   5. Representative subject to acceptance by Owner and Engineer.
   6. No substitute representatives will be allowed until written acceptance by Owner and Engineer has been obtained.

B. Completion of manufacturer on-site services: Engineer acceptance required.

C. Manufacturer is responsible for determining the time required to perform the specified services.
   1. Minimum times specified in the Contract Documents are estimates.
   2. No additional costs associated with performing the required services will be approved.
   3. Manufacturer required to schedule services in accordance with the Contractor's project schedule up to and including making multiple trips to project site when there are separate milestones associated with installation of each occurrence of manufacturer's equipment.

D. Manufacturer's on-site services as specified in the Contract Documents include the following:
   1. Assistance during Commissioning and Process Start-up.
   2. Provide copies of manufacturers' representatives field notes and data to Engineer.
   3. Other requirements as specified in the Contract Documents.

1.04 COMMISSIONING PHASE

A. Overview of Commissioning Phase:
   1. General:
      a. Include specified Source Testing, Owner Training, Installation Testing, Functional Testing, and Closeout Documentation required by this Section and the technical sections.
   2. Contractor responsibilities:
      a. Prior to testing, verify equipment protective devices and safety devices have been installed, calibrated, and tested.
      b. Acceptable tests: Demonstrate the equipment/system performance meets the requirements stated in the Contract Documents.
         1) When the equipment/system fails to meet the specified requirements, perform additional, more detailed, testing to determine the cause, correct, repair, or replace the causative components and repeat the testing that revealed the deficiency.

B. Source Testing:
   1. Also referred to as factory testing or factory acceptance testing (FAT).
   2. Test components, devices, and equipment/system for proper performance at point of manufacture or assembly as specified in the technical specifications.
   3. Notify the Engineer in writing when the equipment/system is ready for source inspection and testing.
   4. Source Test Plan:
      a. As specified in this Section and other technical sections.
      b. Source testing requirements as specified in technical sections.
         1) Non-witnessed: Provide Manufacturer's Certificate of Source Testing.
         2) Witnessed: 1 Owner's representative and 1 Engineer's representative present during testing unless otherwise specified and provide Manufacturer's Certificate of Source Testing.
      c. Prepared by Contractor as a result of discussions and planning emerging from regularly conducted commissioning and process start-up meetings for source tests as specified in the Contract Documents.
      d. Provide the following items for each Source Test:
         1) Purpose and goals of the test.
         2) Identification of each item of equipment/system, including system designation, location, tag number, control loop identifier, etc.
         3) Description of the pass/fail criteria that will be used.
         4) Listing of pertinent reference documents (Contract Documents and industry standards or specifications applicable to the testing).
         5) Complete description, including drawings, of test stands and/or test apparatuses.
         6) Credentials of test personnel.
         7) Descriptions of test equipment to be used, product information and all appropriate calibration records for the test equipment.
         8) Test set-up procedures.
         9) Detailed, step-by-step test procedures.
            a) The level of detail shall be sufficient for any witness with a rudimentary technical aptitude to be able to follow the steps and develop confidence that the tests were being performed as planned.

b) All steps are significant and all steps shall be included in the procedures.

10) Sample data logs and data recording forms. Sample computations or analyses with the results in the same format as the final report to demonstrate how data collected will be used to generate final results.
    a) Complete disclosure of the calculation methodologies.
    b) Include a sample for each type of computation required for the test and analysis of the results.
11) Detailed outline of the Source Test report.
12) Sample test reports.

e. Submit Source Test Plan and forms as specified in the technical specifications.
    1) Submit a copy of the Source Test Plan at least 21 days before any scheduled test date.
    2) Engineer acceptance of Source Test Plan required prior to beginning source testing.
    3) Schedule the testing after acceptance of the test procedures submittal.

f. Indicate the desired dates for source inspection and testing.
    1) Notify the Engineer of the scheduled tests a minimum of 15 days before the date of the test.

5. Test results:
    a. Prepare and submit test results with collected data attached.
    b. If Source Test is not ready when the witnesses arrive or if the Source Test fails, the witnesses will return home with Contractor responsible for costs associated with the trip including costs described above. Contractor is responsible for rescheduling the Source Test and witnesses' costs associated with the second trip including costs described above.
    c. Contractor is responsible for witnesses' costs associated with retests including costs described above.
6. Contractor is responsible for providing fuel, chemicals, and other consumables needed for Source Test.

C. Owner training:
1. Training instruction format:
    a. The training for operations and maintenance personnel shall be provided as one entity.
    b. Instructors shall apply adult education best practices, emphasizing learner participation and activity.
    c. Training delivery may include problem solving, question/answer, hands-on instruction, practice, evaluation/feedback tools, and lecture.
    d. Visual aids and hands-on practice sessions must support training objectives.
    e. Lecturing should be less than 30 percent of class time.
    f. Conduct hands-on instruction according to the following descriptions:
        1) Present hands-on demonstrations of at least the following tasks:
            a) Proper start-up, shutdown, and normal and alternative operating strategies.
            b) Common corrective maintenance repairs for each group.
            c) Describe recommended procedures to check/test equipment/system following a corrective maintenance repair.

2) Use tools and equipment provided by manufacturer to conduct the demonstrations.
    a) Submit requests for supplemental assistance and facilities with the Contractor's proposed lesson plans.
3) Contractor remains responsible for equipment disassembly or assembly during hands-on training situations involving equipment disassembly or assembly by Owner's personnel.
    a) Provide written certification of proper equipment/system operation to Engineer after completion of hands-on training.

2. Class agenda:
    a. Include the following information in the agenda:
        1) Instructor name.
        2) Listing of subjects to be discussed.
        3) Time estimated for each subject.
        4) Allocation of time for Owner staff to ask questions and discuss the subject matter.
        5) List of documentation to be used or provided to support training.
    b. Owner may request that particular subjects be emphasized and the agenda be adjusted to accommodate these requests.
    c. Distribute copies of the agenda to each student at the beginning of each training class.
3. Number of students:
    a. Estimated maximum class size: 5 persons.
        1) Owner will determine the actual number of students.
        2) Engineer will provide an estimated headcount 1 week prior to the class, so that the instructor can provide the correct number of training aids for participants.
4. Instructor qualifications:
    a. Provide instructors completely knowledgeable in the equipment/system for which they are training.
    b. Provide instructors experienced in conducting classes.
    c. Provide instructor's technical preparation and instructional technology skills and experience.
    d. Sales representatives are not qualified instructors unless they possess the detailed operating and maintenance knowledge required for proper class instruction.
    e. If, in the opinion of the Owner, an appropriately knowledgeable person did not provide the scheduled training, such training shall be rescheduled and repeated with a suitable instructor.
5. Training aids:
    a. Instructors are encouraged to use audio-visual devices, P&IDs, models, charts, and so forth, to increase the transfer of knowledge.
    b. Instructors shall provide such equipment (televisions, video recorder/player, computer, projectors, screens, easels, etc.), models, charts, and so forth for each class.
    c. Instructor is responsible for confirming in advance that the classroom will be appropriate for the types of audiovisual equipment to be employed.

6. Classroom documentation:
    a. Trainees will keep training materials and documentation after the session.
    b. Operations and maintenance manuals, as specified in technical sections:
        1) Provide a minimum of 2 copies of final Engineer accepted operations and maintenance manuals as specified in Section 01782 - Operation and Maintenance Data for use during the classroom instruction.
        2) Owner reserves the right to delay training for a particular equipment item if the operations and maintenance manuals for that equipment are incomplete, inaccurate, or otherwise unsuitable for use by the Owner's staff.
        3) No contract extensions or extra costs will be allowed for training delays due to operations and maintenance manual submittal delays.
    c. Provide supplemental documentation handouts to support instruction.
    d. Digitally record video of each training session.
        1) Include classroom and field instruction with question and answering periods.
        2) Engineer acceptance required for producer of video materials from one of the following options:
            a) Qualified, professional video production company.
            b) Contractor demonstrates satisfactorily skill of other personnel.
        3) Record in digital format and recording shall become property of the Owner.
            a) Provide audio quality that is not degraded during the recording of the field sessions due to background noise, space, distance or other factors.
        4) Video files shall be file format and delivery medium as directed and accepted by Owner.
        5) Provide 2 complete sets of video materials fully indexed and cataloged with printed labels stating session content and dates recorded.
        6) The Contractor shall provide a written release from all claims to the recorded training material produced, if required.
    e. Training modules:
        1) Provide a training module for each equipment category.
        2) Divide each training module's instructional content into discrete lesson plans.
    f. Lesson plans:
        1) Provide performance based learning objectives.
        2) State learning objectives in terms of what the trainees will be able to do at the end of the lesson.
        3) Define student conditions of performance and criteria for evaluating instructional success.
            a) Provide the following information:
        4) Instruction lesson plan outlines for each craft.
            a) Provide specific components and procedures.
        5) Minimum requirements:
            a) Hands-on demonstrations planned for the instructions.
            b) Cross-reference training aids.
            c) Planned training strategies such as whiteboard work, instructor questions, and discussion points or other planned classroom or field strategies.

d) Attach handouts cross-referenced by section or topic in the lesson plan.
e) Indicate duration of outlined training segments.

6) Provide maintenance instruction lesson plans including mechanical, HVAC, instrumentation, and electrical aspects:
   a) Equipment operation:
      (1) Describe equipment's operating (process) function and system theory.
      (2) Describe equipment's fundamental operating principles and dynamics.
      (3) Identify equipment's mechanical, electrical, and electronic components and features.
      (4) Identify support equipment associated with the operation of subject equipment.
      (5) Detail the relationship of each piece of equipment or component to the subsystems, systems, and process.
      (6) Cite hazards associated with the operations, exposure to chemicals associated with the component, or the waste stream handled by the component.
      (7) Specify appropriate safety precautions, equipment, and procedures to eliminate, reduce, or overcome hazards.
   b) Detailed component description:
      (1) Define Preventative Maintenance (PM) inspection procedures required on equipment in operation, spot potential trouble symptoms (anticipate breakdowns), and forecast maintenance requirements (predictive maintenance).
         (a) Review preventive maintenance frequency and task analysis table.
      (2) Identify each component function and describe in detail.
      (3) Where applicable, group relative components into subsystems.
      (4) Identify and describe in detail equipment safety features, permissive and controls interlocks.

7) Provide the following information in equipment troubleshooting lesson plans:
   a) Define recommended systematic troubleshooting procedures as they relate to specific craft problems.
   b) Provide component specific troubleshooting checklists as they relate to specific craft problems.

8) Provide the following information in equipment Corrective Maintenance (CM) troubleshooting lesson:
   a) Describe recommended equipment preparation requirements as they relate to specific craft problems.
   b) Identify and describe the use of any special tools required for maintenance of the equipment as they relate to specific craft problems.
   c) Describe component removal/installation and disassembly/assembly procedures for specific craft repairs.

d) Perform at least 2 hands-on demonstrations of common corrective maintenance repairs.
(1) Additional demonstrations may be required by the Owner.
e) Describe recommended measuring instruments and procedures, and provide instruction on interpreting alignment measurements, as appropriate.

7. Class logistics:
   a. Delivery time minimum: 2 hours.
   b. Delivery time maximum: 4 hours.
      1) Longer time requires Engineer approval.
   c. Class agenda:
      1) Refreshment break: One 10-minute.
      2) Meal break: One 45-minute, unless otherwise specified.
      3) Schedule refreshment breaks and meal breaks to meet the class needs and Owner work rules.
   d. Schedule specific sessions:
      1) Minimum of 30 days in advance to allow Owner staffing arrangements to take place.
      2) At the times requested by the Owner, within the period 7 a.m. to 7 p.m. Monday through Friday.
         a) Times scheduled will be at Owner's discretion.
      3) Owner approval and confirmation required for session schedules.
      4) Provide minimum of 2 sessions for each class unless otherwise noted.
         a) The purpose of having multiple sessions on each class is to accommodate the attendance of as many Owner personnel working different shifts as possible.
         b) A maximum of 1 session per day for each class.
8. Distribute Training Evaluation Form following each training session.
   a. Training Evaluation Form is included in this Section.
   b. Return completed Training Evaluation Forms to Owner's designated training coordinator immediately after session is completed.
   c. Revise training sessions judged "Unsatisfactory" by a majority of attendees.
      1) Conduct training sessions again until a satisfactory rating is achieved at no additional cost to Owner.
9. Submittals:
   a. Prior to the training session:
      1) Instructor qualifications: Due 30 calendar days prior to initial training session.
      2) Training course materials: Due 14 calendar days prior to initial training session.
         a) Training agenda, lesson plan, presentation, and handouts.
         b) Other audio-visual aids utilized during each training course.
         c) Format: 2 electronic copies and 3 hard copies organized in notebooks.
   b. Post training session:
      1) Training course materials: Due 14 calendar days after class completion.
         a) Video recordings.
         b) Class attendance sheet.

c) Training agenda, final lesson plan, presentation, and handouts.
d) Other audio-visual aids utilized during each training course.
e) Provide materials for all sessions of the class in a single transmittal.
f) Format: 2 electronic copies and 3 hard copies organized in notebooks.

D. Installation Testing:
1. Perform subsystem testing according to accepted Subsystem Testing Plan.
2. Initiate the Manufacturer's Certificate of Installation and Functionality Compliance.
a. Manufacturer's Certificate of Installation and Functionality Compliance is included in this Section.
b. Manufacturer's Certificate of Installation and Functionality Compliance certifies the equipment meets the following requirements:
1) Has been properly installed, adjusted, aligned, and lubricated.
2) Is free of any stresses imposed by connecting piping or anchor bolts.
3. Coordinate Installation Testing with restrictions and requirements as specified in Section 01140 - Work Restrictions.
4. Perform coating holiday testing as specified in Section 09960 - High-Performance Coatings.
5. Perform pressure and leakage testing as specified in individual component Sections and Sections 15956 - Piping Systems Testing.
6. Perform mechanical equipment Installation Testing: As specified in individual equipment Sections:
a. Remove rust preventatives and oils applied to protect equipment during construction.
b. Flush lubrication systems and dispose of flushing oils.
1) Recharge lubrication system with lubricant recommended by manufacturer.
c. Flush fuel system and provide fuel for testing and art-up.
d. Install and adjust packing, mechanical seals, O-rings, and other seals. Replace defective seals.
e. Remove temporary supports, bracing, or other foreign objects installed to prevent damage during shipment, storage, and erection.
f. Check rotating machinery for correct direction of rotation and for freedom of moving parts before connecting driver.
g. Perform cold alignment and hot alignment to manufacturer's tolerances.
h. Adjust V-belt tension and variable pitch sheaves.
i. Inspect hand and motorized valves for proper adjustment.
1) Tighten packing glands to insure no leakage, but permit valve stems to rotate without galling.
2) Verify valve seats are positioned for proper flow direction.
j. Tighten leaking flanges or replace flange gasket.
1) Inspect screwed joints for leakage.
k. Install gratings, safety chains, handrails, shaft guards, and sidewalks prior to operational testing.
7. Electrical devices and subsystems Installation Testing: As specified.
a. Perform insulation resistance tests on all wiring except wiring and control wiring inside electrical panels.
b. Perform grounding resistance tests on grounding systems.

c. Test and set relays and circuit breaker trip units for proper operation.
    1) Settings as documented in accepted electrical studies performed as specified.
d. Perform direct current high potential tests on all cables that will operate at more than 2,000 volts.
e. Motors:
    1) Windings energized to 1,000 volts DC for 1 minute.
        a) Motor resistance measured at the end of the test and recorded.
    2) Check motors for actual full load amperage draw and proper rotation.

8. Instrumentation devices and subsystems Installation Testing: As specified:

E. Functional Testing:
1. Perform subsystem testing according to accepted Subsystem Testing Plan.
2. Notify the Engineer 5 days prior to when the Work is ready for Functional Testing.
    a. Perform testing in the presence of the Engineer.
3. Determine Functional Testing durations with Owner's input.
    a. Durations will vary depending on the availability of water for testing.
    b. Target minimum Functional Test duration: 8 hours.
        1) Identify equipment/system that cannot be tested for a minimum of 8 hours as specified in technical sections.
4. Perform Functional Testing as specified in Contract Documents technical sections.
    a. Perform Functional Testing in addition to the other tests specified in the technical sections.
    b. Perform Functional Testing to demonstrate that the component equipment functions as an entire system in accordance with the design requirements.
    c. Perform Functional Testing to demonstrate that the unit process has operated in a manner necessary to demonstrate equipment/system functions manually in local, manually in remote (or remote manual), and automatically in remote (in remote auto).
    d. Perform testing with Contractor provided water.
    e. Repair or replace parts which operate improperly and retest.
    f. Owner and Engineer provide acceptance of Functional Testing results.
5. Provide completed Manufacturer's Certificate of Installation and Functionality Compliance.
    a. Manufacturer's Certificate of Installation and Functionality Compliance is included in this Section.
    b. Manufacturer's Certificate of Installation and Functionality Compliance certifies the equipment/system meets the following requirements:
        1) Is suitable for satisfactory full-time operation under full load conditions.
        2) Operates within the allowable limits for vibration and noise.
        3) Electrical and instrumentation requirements:
            a) Electrical equipment, instrumentation, and control panels are properly installed, calibrated, and functioning.
            b) Electrical Installation Testing is complete and test results have been accepted by the Engineer.
                (1) Noted deficiencies have been corrected.
                (2) Relays, circuit breakers, and other protective devices are set.

c) Control logic for start-up, shutdown, sequencing, interlocks, control, and emergency shutdown have been tested and are properly functioning.
d) Motor control is calibrated and tested.

F. Clean Water Facility Testing:
1. Utilize raw water.
2. Do not begin Clean Water Facility Testing until Engineer has accepted submittals for Functional Testing requirements.
3. Test entire facility treating raw water at the design flow for the largest single process or system train to ensure proper complete facility (equipment/system) hydraulic performance.
4. Perform testing in the presence of the Engineer unless such presence is expressly waived in writing.
5. The purpose of Clean Water Facility Testing is to confirm extended equipment\system operation prior to Process Start-up.
a. Testing shall occur for a minimum of 7 days with all systems operational to the extent possible.

G. Closeout documentation:
1. Submittals:
a. Provide records generated during commissioning and process start-up phase of Project.
1) Required documents include but are not limited to:
a) Training documentation.
b) Manufacturer’s Certificate of Source Testing.
c) Manufacturer’s Certificate of Installation and Functionality Compliance.
d) Daily logs of equipment/system testing identifying tests conducted and outcome.
e) Test forms and documentation.
f) Logs of time spent by manufacturer's representatives performing services on the job site.
g) Equipment lubrication records.
h) Electrical phase, voltage, and amperage measurements.
i) Insulation resistance measurements.
j) Bearing temperature measurements.
2) Data sheets of control loop testing including testing and calibration of instrumentation devices and setpoints. Format: 2 electronic copies and 3 hard copies organized in notebooks.
3) Due date: Within 14 calendar days of Substantial Completion.
b. Provide Instrumentation and Control Performance Testing reports.
1) Format: 2 electronic copies and 3 hard copies organized in notebooks.
2) Due date: Within 7 calendar days of Instrumentation and Controls Performance testing completion.

PART 2 PRODUCTS

Not used.

PART 3 EXECUTION

Not used.

END OF SECTION

ATTACHMENT A - MANUFACTURER'S CERTIFICATE OF SOURCE TESTING

MANUFACTURER'S CERTIFICATE OF SOURCE TESTING

OWNER _____ EQPT/SYSTEM _____

PROJECT NAME _____ EQPT TAG NO. _____

PROJECT NO. _____ EQPT SERIAL NO. _____

SPECIFICATION NO. _____

SPECIFICATION TITLE _____

Comments: _____

_____

_____

_____

_____

I hereby certify Source Testing has been performed on the above-referenced equipment/system as defined in the Contract, and results conform to the Contract Document requirements. Testing data is attached.

Date of Execution: _____, 20____

Manufacturer: _____

Manufacturer's Authorized Representative Name *(print)*: _____

_____

(Authorized Signature)

If applicable, Witness Name *(print)*: _____

_____

(Witness Signature)

SECTION 01770

CLOSEOUT PROCEDURES

PART 1 GENERAL

1.01 SUMMARY

A. Section includes: Contract closeout requirements.

1.02 REFERENCES

A. American Water Works Association (AWWA).

1.03 FINAL CLEANING

A. Perform final cleaning prior to inspections for Substantial Completion.

B. Employ skilled workers who are experienced in cleaning operations.

C. Use cleaning materials which are recommended by manufacturers of surfaces to be cleaned.

D. Prevent scratching, discoloring, and otherwise damaging surfaces being cleaned.

E. Clean roofs, gutters, downspouts, and drainage systems.

F. Broom clean exterior paved surfaces and rake clean other surfaces of site work:
   1. Police yards and grounds to keep clean.

G. Remove dust, cobwebs, and traces of insects and dirt.

H. Clean grease, mastic, adhesives, dust, dirt, stains, fingerprints, paint, blemishes, sealants, plaster, concrete, and other foreign materials from sight-exposed surfaces, and fixtures and equipment.

I. Remove non-permanent protection and labels.

J. Polish waxed woodwork and finish hardware.

K. Clean ducts, blowers, and coils when units were operated without filters during construction.

L. Clean light fixtures and replace burned-out or dim lamps.

M. Probes, elements, sample lines, transmitters, tubing, and enclosures have been cleaned and are in like-new condition.

1.04 WASTE DISPOSAL

A. Arrange for and dispose of surplus materials, waste products, and debris off-site:
   1. Prior to making disposal on private property, obtain written permission from Owner of such property.

B. Do not create unsightly or unsanitary nuisances during disposal operations.

C. Maintain disposal site in safe condition and good appearance.

D. Complete leveling and cleanup prior to Final Completion of the Work.

1.05 TOUCH-UP AND REPAIR

A. Touch-up or repair finished surfaces on structures, equipment, fixtures, and installations that have been damaged prior to inspection for Substantial Completion.

B. Refinish or replace entire surfaces which cannot be touched-up or repaired satisfactorily.

1.06 CLOSEOUT DOCUMENTS

A. Submit the following Closeout Submittals before Substantial Completion:
   1. Punch list of items to be completed or corrected with the request for issuance of Substantial Completion.
   2. Evidence of Compliance with Requirements of Governing Authorities.
   3. Project Record Documents.
   4. Approved Operation and Maintenance Manuals.
   5. Approved Warranties and Bonds.
   6. Completed contract requirements for commissioning and process start-up.

1.07 EVIDENCE OF COMPLIANCE WITH REQUIREMENTS OF GOVERNING AUTHORITIES

A. Submit the following:
   1. Certificate of Occupancy.
   2. Certificates of Inspection:
      a. Elevators.
      b. Mechanical:
         1) Form U-1 "Manufacturer's Data Report for Unfired Pressure Vessels" for each pressure vessel furnished and installed.
      c. Electrical:
         1) Certificates of inspection.
      d. Elevation Certificate for each structure, as required by the governing authority. To be signed and sealed by a professional land surveyor registered in the State of Florida. Submit 3 originals for each structure.

1.08 PROJECT RECORD DOCUMENTS

A. Maintain at Project site, available to Owner and Engineer, 1 copy of the Contract Documents, shop drawings, and other submittals in good order:
   1. Mark and record field changes and detailed information contained in submittals and change orders.
   2. Record actual depths, horizontal and vertical location of underground pipes, duct banks, and other buried utilities. Reference dimensions to permanent surface features.
   3. Identify specific details of pipe connections, location of existing buried features located during excavation, and the final locations of piping, equipment, electrical conduits, manholes, and pull boxes.
   4. Identify location of spare conduits including beginning, ending, and routing through pull boxes and manholes. Record spare conductors, including number and size, within spare conduits and filled conduits.
   5. Provide schedules, lists, layout drawings, and wiring diagrams.
   6. Make annotations in electronic format conforming to the following color code:

Additions:	Red
Deletions:	Green
Comments	Blue
Dimensions:	Graphite

B. Maintain documents separate from those used for construction:
   1. Label documents "RECORD DOCUMENTS."

C. Keep documents current:
   1. Record required information at the time the material and equipment is installed and before permanently concealing.
   2. Engineer will review Record Documents weekly to ascertain that changes have been recorded.

D. Affix civil engineer's or professional land surveyor's signature and registration number to Record Drawings to certify accuracy of information shown.

E. Deliver Record Documents with transmittal letter containing date, Project title, Contractor's name and address, list of documents, and signature of Contractor.

F. Updated Record Documents are a condition for Engineer’s recommendation for progress payment.

G. Final Schedule Submittal as specified in Section 01321 - Schedules and Reports.

1.09 MAINTENANCE SERVICE

A. Maintenance service as specified in technical specifications.

1.10 SUBSTANTIAL COMPLETION

A. Obtain Certificate of Substantial Completion.

1.11 FINAL COMPLETION

A. When Contractor considers the Work is complete, submit written certification that:
   1. Work has been completed in accordance with the Contract Documents:
   2. Punch list items have been completed or corrected.
   3. Work is ready for final inspection.

B. Engineer will make an inspection to verify the status of completion with reasonable promptness.

C. Should the Engineer consider that the Work is incomplete or defective:
   1. Engineer will promptly notify the Contractor in writing, listing the incomplete or defective work.
   2. Contractor shall take immediate steps to remedy the stated deficiencies and send a second written certification to the Engineer that the Work is complete.
   3. Engineer shall re-inspect the Work.

1.12 FINAL ADJUSTMENT OF ACCOUNTS

A. Submit a final statement of accounting to the Engineer at least 7 days prior to final Application for Payment.

B. Statement shall reflect all adjustments to the Contract amount.
   1. The original Contract amount.
   2. Additions and deductions resulting from:
      a. Change Orders.
      b. Units installed and unit prices.
      c. Set-offs for uncorrected or incomplete Work.
      d. Set-offs for liquidated damages.
      e. Set-offs for reinspection payments.
      f. Extended engineering and/or inspection services and inspection overtime.
      g. Excessive shop drawings review cost by the Engineer.
      h. Other adjustments.
   3. Total Contract amount, as adjusted.
   4. Previous payments.
   5. Remaining payment due.

C. Engineer will prepare a final Change Order reflecting approved adjustments to the Contract amount which were not previously made by Change Orders.

1.13 FINAL APPLICATION FOR PAYMENT

A. Contractor shall submit the final Application for Payment reflecting the agreed upon information provided in the final statement of accounting.

PART 2 PRODUCTS – NOT USED

PART 3 EXECUTION (NOT USED)

END OF SECTION

SECTION 01782

OPERATION AND MAINTENANCE MANUALS

PART 1 GENERAL

1.01 SUMMARY

A. Section includes: Preparation and submittal of manual with requirements to operate and maintain the equipment.

1.02 SUBMITTALS

A. Make approved manuals available at project site for use by construction personnel and Owner.

B. Final Operation and Maintenance Manuals.

1.03 PREPARATION

A. General requirements:
   1. Provide dimensions in English units.
   2. Assemble material, where possible, in the same order within each volume.
   3. Reduce drawings and diagrams to 8-1/2 by 11-inch size, if possible unless otherwise specified.
   4. Complete forms on computer, handwriting not acceptable.
   5. Delete items or options not provided in the supplied equipment or system.
   6. Provide package control system annotated ladder logic for PLC, if applicable.

B. Hard copy requirements:
   1. Binders: 3-ring with rigid covers.
      a. Break into separate binders as needed to accommodate large size.
   2. Utilize numbered tab sheets to organize information.
   3. Provide original and clear text on reproducible non-colored paper, 8-1/2 by 11-inch size, 24 pound paper.
   4. Drawings larger than 8-1/2 by 11 inch:
      a. Fold drawings separately and place in envelope bound into the manual.
      b. Label each drawing envelope on the outside regarding contents.

C. Electronic requirements:
   1. File format:
      a. Entire manual in PDF format.
         1) Include text and drawing information.
         2) Provide a single PDF file even if the hard copy version is broken into separate binders due to being large.

3) Create PDF from the native format of the document (Microsoft Word, graphics programs, drawing programs, etc.).
   a) If material is not available in native format and only available in paper format, remove smudges, fingerprints, and other extraneous marks before scanning to PDF format.
   b) Hard copy record drawing requirements:
      (1) Provide a single multipage PDF file of each set of the scanned drawings.
      (2) Page 1 shall be the cover of the drawing set.
   c) At file opening, display the entire cover.
      (1) Scan drawings at 200 to 300 dots per inch (DPI), black and white, Group IV Compression, unless otherwise specified.
      (2) Scan drawings with photos in the background at 400 dots per inch (DPI), black and white, Group IV Compression.
4) Pagination and appearance to match hard copy.
5) Searchable.
6) Scanned images are not acceptable.
7) Bookmarks:
   a) Bookmarks shall match the table of contents.
   b) Bookmark each section (tab) and heading.
   c) Drawings: Bookmark at a minimum, each discipline, area designation, or appropriate division.
   d) At file opening, display all levels of bookmarks as expanded.
8) Thumbnails optimized for fast web viewing.

b. Drawing requirements:
   1) Provide additional copy of drawings in most current version of AutoCAD format.
   2) Drawings shall have a white background.
   3) Drawing shapes shall not degrade when closely zoomed.
   4) Screening effects intended to de-emphasize detail in a drawing must be preserved.
   5) Delete items or options not provided in the supplied equipment or system.

2. Media:
   a. USB flash drive.
   b. Secure File Transfer Protocol (SFTP).
3. Label media with the following information:
   a. Operation and Maintenance Manual.
   b. Equipment name.
   c. Specification Section Number.
   d. Equipment tag number.
   e. Owner's name.
   f. Project number and name.
   g. Date.
4. If multiple submittals are made together, each submittal must have its own subdirectory that is named and numbered based on the submittal number.

1.04 MANUAL PACKAGING

A. Label the spines:
   1. Equipment name.
   2. Tag number.
   3. Project name.
   4. Owner name.

B. Cover page:
   1. Operation and Maintenance Manual.
   2. Equipment name.
   3. Specification Section Number
   4. Equipment tag number.
   5. Owner's name.
   6. Project number and name.
   7. Date.

1.05 CONTENTS

A. Table of Contents: General description of information provided within each tab section.

B. Complete Attachment A - Equipment Summary Form.

C. Description of system and components.

D. Description of equipment function, normal operating characteristics, and limiting conditions.

E. On-line resources.

F. Telephone resources.

G. Approved submittals:
   1. Markup with any field changes.
   2. Final programming.

H. Start-up procedures: Recommendations for installation, adjustment, calibration, and troubleshooting.

I. Operating procedures:
   1. Step-by-step instructions including but not limited to the following:
      a. Safety precautions and applicable Safety Data Sheets.
      b. Guidelines.
      c. Other information as needed for safe system operation and maintenance.

J. Preventative maintenance procedures:
   1. Recommended steps and schedules for maintaining equipment.
   2. Troubleshooting.

K. Lubrication information: Required lubricants and lubrication schedules.

L. Overhaul instructions: Directions for disassembly, inspection, repair and reassembly of the equipment; safety precautions; and recommended tolerances, critical bolt torques, and special tools that are required.

M. Manufacturer's technical reference manuals.

PART 2 PRODUCTS (NOT USED)

PART 3 EXECUTION (NOT USED)

END OF SECTION

ATTACHMENT A - EQUIPMENT SUMMARY FORM

EQUIPMENT SUMMARY FORM

1. EQUIPMENT ITEM_____

2. MANUFACTURER _____

3. EQUIPMENT TAG NUMBER(S)_____

4. LOCATION OF EQUIPMENT_____

5. WEIGHT OF INDIVIDUAL COMPONENTS (OVER 100 POUNDS)_____

_____

_____

_____

6. NAMEPLATE DATA -
   - Horsepower_____
   - Amperage_____
   - Voltage_____
   - Service Factor (S.F.)_____
   - Speed_____
   - ENC Type_____
   - Capacity_____
   - Other_____

7. MANUFACTURER'S LOCAL REPRESENTATIVE

   Name_____

   Address_____

   Telephone Number_____

8. MAINTENANCE REQUIREMENTS:

Maintenance Operation	Frequency	Lubricant (if applicable)	Comments
(List each operation required. Refer to specific information in Manufacturer's Manual, if applicable)	(List required frequency of each maintenance operation)	(Refer by symbol to lubricant list as required)	

9. LUBRICANT LIST:

Reference Symbol	Conoco Phillips	Exxon/Mobil	BP/Amoco	Other (List)
(Symbols used in Item 7 above)	(List equivalent lubricants, as distributed by each manufacturer for the specific use recommended)			

10. SPARE PARTS (recommendations)_____

_____

11. COMMENTS_____

12. GENERAL INFORMATION:

Date Accepted*: _____

Expected Life*: _____

Project Name & Number: _____

Design Engineer: _____

13. WARRANTY:

Start Date: _____

Expiration Date: _____

Prorated: _____

SECTION 01850

DESIGN CRITERIA

PART 1 GENERAL

1.01 SUMMARY

A. Section includes:
   1. Design criteria for use in the selection of equipment and appurtenances specified in Technical Sections of these Specifications and indicated on the Drawings.
   2. Criteria for design of systems, components and equipment fabricated off site and shipped to the Work for installation.
   3. Criteria for design of anchors to connect equipment and appurtenances to supports and structures.

B. The criteria in this Section apply throughout the Work, unless additional criteria, or more restrictive criteria, are indicated.
   1. Additional criteria and requirements relevant to specific locations, specific materials, and specific equipment are indicated on the Drawings, and in the Technical Sections.

1.02 REFERENCES

A. American Society of Civil Engineers (ASCE):
   1. 7-16 - Minimum Design Loads and Associated Criteria for Buildings and Other Structures. (ASCE 7).

B. American Society of Heating, Refrigeration and Air Conditioning Engineers (ASHRAE):
   1. ASHRAE Fundamentals Handbook.

C. International Code Council (ICC):
   1. International Energy Conservation Code (IECC).
   2. International Plumbing Code (IPC).

1.03 SUBMITTALS

A. Submit documentation of Contractor-prepared designs as specified in Technical Sections of the Contract Documents.
   1. Calculations:
      a. Where submittal of calculations is required:
         1) Provide complete calculations, including sketches to illustrate the design concepts being evaluated, and details to fully describe proposed construction.

2. Shop drawings:
    a. Shop drawings describing components and manufacturer's requirements for connections.
        1) Include details for connections of components to structures and supports.
        2) Include details for anchoring bracing to structures where required.

B. Delegated Design Submittals:
    1. As specified in Section 01357 - Delegated Design Procedures.

PART 2 PRODUCTS

2.01 DESIGN CRITERIA - SITE INFORMATION

A. Site name: Stuart Water Reclamation Facility.
    1. Location:
        a. Street Address: As specified in Section 01110 - Summary of Work.
        b. Coordinates (approximate):
            1) Latitude 27°11’48”N; Longitude 80°14’51”W.
        c. Elevation (approximate):
            1) 6.6 feet above mean sea level.

2.02 DESIGN CRITERIA - REGULATORY REQUIREMENTS

A. Requirements of authorities having jurisdiction over the project are included in Section 01410 - Regulatory Requirements.

2.03 DESIGN CRITERIA - OPERATING ENVIRONMENT

A. Project conditions:
    1. Equipment and materials for the Work shall be suitable for performance in a wastewater treatment plant**.**
    The Drawings and Technical Sections include additional criteria and requirements relevant to specific locations, materials, and equipment

2.04 DESIGN CRITERIA - STRUCTURAL

A. General:
    1. Criteria for structural design of:
        a. Equipment exposed to outdoor environments.
        b. Equipment supports and bracing, and anchorage of such items to building and non-building structures.
        c. Structures provided for the Work through delegated design.
        d. Manufactured and prefabricated structures, and anchorage of such structures to foundations or other supporting elements.
    2. Structural design criteria used by the engineer of record and required by the building code to be indicated on the Drawings, are included on the Contract Drawing titled "General Structural Notes."

B. Delegated Design:
   1. Structural engineering design shall be performed by a Civil or Structural Engineer licensed in the State of Florida.

C. Groundwater elevation:
   1. For design of buried and partially buried construction:
      a. Assume groundwater level at grade.

D. Structure risk category:
   1. Determine importance factors, develop design loads, and provide detailing in accordance with the provisions of ASCE 7 and the building code specified in Section 01410 - Regulatory Requirements, based on Structure Risk Category III.

Table: Project Structures - Risk Category and Seismic Design Information

Description: Water Treatment Facility

Area	Description	Risk Category	Site Class	S_{DS}	S_{D1}	Seismic Design Category[(1)]

Notes:

(1) Seismic Design Category for delegated design, and for seismic certification of electrical and mechanical equipment as required by ASCE 7.

E. Wind loads:
   1. Design structures and non-structural components that are exposed to wind to withstand design wind loads.
      a. Reduction of wind loads based on shielding effects of surrounding structures or components is not allowed.
      b. Design for wind loading is not required for non-structural components and for non-building structures located inside enclosed buildings.
   2. Design parameters:
      a. Basic wind speed:
         1) 173 miles per hour (33 feet, 3 second gust).
      b. Exposure category: D.
      c. Topographic factor, Kzt: 1.0.

F. Rainfall loads:
   1. Determine rainfall loads using rainfall intensity specified herein, and including effects of exposed surface slope, height above surface to discharge elevation, and deflection of ponded surfaces.

G. Operational loads:
   1. Loads may include equipment vibration, torque, thermal effects, effects of internal contents (weight and sloshing), surge or "water hammer," and other load conditions.
   2. Design for loads indicated by equipment manufacturer.
   3. Design for loads indicated in the Technical Sections for equipment and appurtenances.

H. Serviceability considerations: ASCE 7-16:
   1. Deflection, unless otherwise indicated on the Drawings, or specified:
      a. Beam deflection as fraction of span:
         1) Walkways and platforms: total load = L/240; live load = L/360.
         2) Equipment supports: L/450.

PART 3 EXECUTION

3.01 GENERAL

A. Design in accordance with the requirements of:
   1. Regulatory requirements, including but not limited to the building code specified in Section 01410 - Regulatory Requirements; AND
   2. Reference standards and project-specific design criteria listed in this Section; AND
   3. Specific requirements for individual elements and components of the Work as specified in subsequent Technical Sections.

B. Designs based on criteria in this Section shall not be less than what is required to comply with the codes and standards specified in Section 01410 - Regulatory Requirements.

C. In the event of conflicts between design criteria, contact Engineer for interpretation.

D. Prepare and submit designs for the following, and where Owner-delegated design is required by the Specifications.
   1. Design, detailing, and anchoring of pre-engineered structures.
   2. Design, detailing, and anchoring of pre-engineered structural components.
   3. Anchoring of equipment and components to structures.
   4. Bracing of equipment and components from structures.
   5. Anchoring and bracing for distribution systems attached to or braced from structures.

E. Requirements for wind design calculations will be waived for the following:
   1. Equipment and components located inside structures, and away from the effects of wind loads.

3.02 DESIGN - ANCHORS FOR EQUIPMENT, COMPONENTS, AND BRACING

A. General:
   1. Complete, submit, and obtain Engineer's approval of anchor designs after approval of equipment and before placement of concrete or masonry that will support or provide bracing for the equipment.
   2. Adjust equipment pad sizes and add additional anchorage confinement reinforcing to provide required strength at anchorage points.
   3. Supports and bracing:
      a. Design and install braces and anchors to transfer forces from equipment and components to the lateral force resisting system of the surrounding structure.
      b. Anchor and brace piping, ductwork, and electrical distribution components so that lateral or vertical displacement does not result in damage to or failure of essential architectural, mechanical, or electrical equipment.
         1) Provide supplementary framing where required to transfer forces.
         2) Detail and locate braces and anchors to minimize differential movements between components and structure.

B. Preparation:
   1. Obtain manufacturer's information:
      a. Layout and location of anchors that connect to equipment base plates, sole plates, or skids.
      b. Sizes of holes for anchors that will be provided in equipment bases or support frames.

C. Analysis and design:
   1. Perform and submit calculations to determine anchor designs at locations where equipment and equipment supports are connected to the supporting structure.
      a. Indicate number, size, type, and material for anchors.
   2. In determining forces at locations where equipment is anchored to structures, include effects of:
      a. Equipment self-weight and operating weight.
      b. Location of equipment center of mass.
      c. Forces from equipment operation including, but not limited to:
         1) Effects of internal contents including weight, sloshing, surge, and water hammer.
         2) Equipment reactions and operating torque.
         3) Equipment vibration.
         4) Thermal effects from equipment and from attached distribution systems.
         5) Other load or displacement inducing conditions.
      d. Forces on equipment from piping and electrical connections.
      e. Forces on equipment from loads specified in this Section.
         1) Include effects of wind where applicable based on location of the equipment in the Work.
         2) Design for load combinations indicated in ASCE 7, unless otherwise specified or indicated on the Drawings.
         3) Wind loads: For equipment and tanks having varying weight based on the volume of contained material, determine anchor forces to accommodate the full range of filled, partially filled, and empty conditions.

3. Determine forces and overturning moments at equipment supports and at locations where supports are anchored to structures.
    a. Indicate shears and associated axial forces at each anchor.
4. Do not use friction to resist sliding resulting from wind forces. Resist only by direct application of sliding loads to fasteners as bearing, shear, tension, or compression forces.
5. Using combined shears and axial forces at each anchor, design anchors and anchor groups for ductile failure.
    a. Ductile failure: Anchor yield before failure of base material, typically concrete or masonry, at the anchor.
6. Anchor selection:
    a. Provide anchors type indicated on the Drawings.
    b. Where anchors are not specifically indicated on the Drawings, select in accordance with the following:
        1) Anchors that resist wind forces:
            a) Cast-in-place forged hex-head anchor bolt.
        2) Anchors loaded in sustained tension:
            a) Cast-in-place forged hex-head anchor bolt.
        3) Anchors for reciprocating, vibrating, and rotating equipment:
            a) Cast-in-place forged hex-head anchor bolt.
    c. Do not use post-installed anchors, mechanical or adhesive, unless:
        1) Post-installed anchors are indicated on the Drawings; or
        2) Post-installed are approved by Engineer prior to placement of the surrounding concrete or masonry.
    d. Anchor diameter:
        1) Select diameter so that hole in base plate is not greater than 125 percent of the nominal diameter of the anchor, nor greater than the diameter of the anchor plus 1/4 inch.
7. Determine number, size, layout, and minimum effective embedment for anchors.
    a. Layout includes anchor spacing and required distance(s) from anchor to edge(s) of supporting concrete or masonry.
    b. Anchors in concrete: Design based on minimum specified 28-day compressive strength, f'c, as follows, unless otherwise indicated on the Drawings for the Work area:
        1) Concrete placed for this Work: f'c = 4000 pounds per square inch.
        2) Existing concrete in place prior to this Work: f'c = 3000 pounds per square inch.
    c. Anchors in masonry: Design based on minimum specified compressive strength, f'm, as follows, unless otherwise indicated on the Drawings for the Work area:
        1) Concrete masonry placed for this Work: f'm = 2000 pounds per square inch.
        2) Existing concrete masonry in place prior to this Work: f'm = 1500 pounds per square inch.
8. Prepare drawings showing construction details of anchor designs.
9. Submit design calculations and drawings prior to placement of anchors, and of the structural elements to which they will connect.

END OF SECTION

SECTION 02050

SOILS AND AGGREGATES FOR EARTHWORK

PART 1 GENERAL

1.01 SUMMARY

A. Section includes:
   1. Aggregate base course.
   2. Drain rock.
   3. Gravel.
   4. Native material.
   5. Sand.
   6. Select material.

1.02 REFERENCES

A. Florida Department of Transportation (FDOT)
   1. Standard Specification for Road and Bridge Construction, Latest Edition

B. ASTM International (ASTM):
   1. C117 - Standard Test Method for Materials Finer than 75-µm (No. 200) Sieve in Mineral Aggregates by Washing.
   2. C131 - Standard Test Method for Resistance to Degradation of Small-Size Coarse Aggregate by Abrasion and Impact in the Los Angeles Machine.
   3. C136 - Standard Test Method for Sieve Analysis of Fine and Coarse Aggregates.
   4. D422 - Standard Test Method for Particle-Size Analysis of Soils.
   5. D2419 - Standard Test Method for Sand Equivalent Value of Soils and Fine Aggregate.
   6. D4318 - Standard Test Method for Liquid Limit, Plastic Limit, and Plasticity Index of Soils.
   7. D4829 - Standard Test Method for Expansion Index of Soils.

1.03 SUBMITTALS

A. Product data:
   1. Material source.
   2. Gradation.
   3. Testing data.

B. Quality control for aggregate base course:
   1. Quality Control for Aggregate Base Course: Control of Materials as required by Section 6 of FDOT Standard Specifications for Road and Bridge Construction.
   2. Test reports: Reports for tests required by Sections of FDOT Standard Specifications for Road and Bridge Construction.
   3. Certificates of Compliance: Certificates as required by Sections of FDOT Standard Specification for Road and Bridge Construction.

1.04 DELIVERY, STORAGE, AND HANDLING

A. Storage and protection: Protect from segregation and excessive moisture during delivery, storage, and handling.

B. As required by Section 6 and Sections 100 through 175 of FDOT Standard Specifications for Road and Bridge Construction.

PART 2 PRODUCTS

2.01 MATERIALS

A. General:
   1. Provide material having maximum particle size not exceeding 4 inches and that is free of trash, lumber, debris, leaves, grass, roots, stumps, and other organic matter.
   2. Materials derived from processing demolished or removed asphalt concrete are not acceptable.

B. Aggregate base course:
   1. As specified in FDOT Standard Specifications for Road and Bridge Construction.

C. Drain rock:
   1. Durability: Percentage of wear not greater than 40 percent when tested in accordance with ASTM C131.
   2. Consists of hard, durable particles of stone or gravel; screened or crushed to specified size and gradation; and free from organic matter, lumps or balls of clay, or other deleterious matter.
   3. Crush or waste coarse material and waste fine material as required to meet gradation requirements.
   4. Conforms to size and grade within the following limits when tested in accordance with ASTM C117 and C136:

Sieve Size (Square Openings)	Percent By Weight Passing Sieve
2 inch	100
1-1/2 inch	95 – 100
3/4 inch	50 – 100
3/8 inch	15 – 55
Number 200	0 – 2

D. Gravel:
   1. Consists of hard, durable particles or fragments of stone or gravel; screened or crushed to specified sizes and gradations; and free from organic matter, lumps or balls of clay, alkali, adobe, or other deleterious matter.

2. When sampled and tested in accordance with specified test methods, material shall comply with following requirements:
   a. Durability: Percentage of wear not greater than 40 percent when tested in accordance with ASTM C131.
   b. Plasticity index: Not greater than 5 when tested in accordance with ASTM D4318.
   c. Liquid limit: Not greater than 25 percent when tested in accordance with ASTM D4318.
3. Conforms to sizes and grade within the following limits when tested in accordance with ASTM C117 and C136:

Sieve Size (Square Openings)	Percent By Weight Passing Sieve	
	Type A	Type B
3 inch	100	--
1-1/2 inch	--	100
Number 4	30 – 75	30 – 70
Number 8	20 – 60	20 – 60
Number 30	10 – 40	10 – 40
Number 200	0 – 12	0 – 12

E. Native material:
1. Sound, earthen material passing 1-inch sieve.
2. Percent of material by weight passing Number 200 sieve shall not exceed 30 when tested in accordance with ASTM D422.
3. Expansion index less than 35 when tested in accordance with ASTM D4829.

F. Sand:
1. Clean, coarse, natural sand.
2. Non-plastic when tested in accordance with ASTM D4318.
3. 100 percent shall pass a 1/2-inch screen.
4. No more than 20 percent shall pass a Number 200 sieve.

G. Select material:
1. Sound earthen material for which the sum of plasticity index when tested in accordance with ASTM D4318 and the percent of material by weight passing a Number 200 sieve shall not exceed 23 when tested in accordance with ASTM D422.
2. Free of debris, cinders, combustibles, roots, sod, wood, cellulose, organic materials and materials subject to termite attack.

PART 3 EXECUTION (NOT USED)

END OF SECTION

SECTION 02300

EARTHWORK

PART 1 GENERAL

1.01 SUMMARY

A. Section includes:
   1. Loosening, excavating, filling, grading, borrow, hauling, preparing subgrade, compacting in final location, wetting and drying, and operations pertaining to site grading for buildings, basins, reservoirs, boxes, roads, and other facilities.
   2. Backfilling and compacting under and around structures.

B. Related sections:
   1. The Contract Documents are complementary; what is called for by one is as binding as if called for by all.
   2. It is the Contractor's responsibility for scheduling and coordinating the Work of subcontractors, suppliers, and other individuals or entities performing or furnishing any of Contractor's Work.

1.02 REFERENCES

A. ASTM International (ASTM):
   1. D1556 - Standard Test Method for Density and Unit Weight of Soil in Place by the Sand Cone Method.
   2. D1557 - Standard Test Method for Laboratory Compaction Characteristics of Soil Using Modified Effort (56,000 ft-lbf/ft^3 (2,700 kN m/m^3)).
   3. D6938 - Standard Test Method for In-Place Density and Water Content of Soil and Soil-Aggregate by Nuclear Methods (Shallow Depth).

B. Florida Department of Transportation (FDOT):
   1. Standard Specification for Road and Bridge Construction, Latest Edition.

1.03 DEFINITIONS

A. Backfill adjacent to structure: Backfill within volume bounded by the exterior surfaces of structure, the surface of undisturbed soil in the excavation around structure, and finish grade around structure.

B. Excavation: Consists of loosening, removing, loading, transporting, depositing, and compacting in final location, wet and dry materials, necessary to be removed for purposes of construction of structures, ditches, grading, roads, and such other purposes as are indicated on the Drawings.

1.04 SYSTEM DESCRIPTION

A. Performance requirements:
   1. Where mud or other soft or unstable material is encountered, remove such material, and refill space with stabilization material. Wrap stabilization material with stabilization fabric.
   2. Obtain acceptable import material from other sources if surplus or borrow materials obtained within Project site does not conform to specified requirements or are not sufficient in quantity.
   3. No extra compensation will be made for hauling of fill materials nor for water required for compaction.

1.05 SUBMITTALS

A. Copy of Property Owner's Agreement allowing placement of surplus soil material on their property.

B. Excavation plan.

1.06 QUALITY ASSURANCE

A. Initial compaction demonstration:
   1. Adequacy of compaction equipment and procedures: Demonstrate adequacy of compaction equipment and procedures before exceeding any of following amounts of earthwork quantities:
      a. 50 cubic yards of backfill adjacent to structures.
      b. 100 cubic yards of embankment work.
      c. 100 cubic yards of fill.
      d. 50 cubic yards of roadway base material.
      e. 100 cubic yards of road fill.
   2. Compaction sequence requirements: Until specified degree of compaction on previously specified amounts of earthwork is achieved, do not perform additional earthwork of the same kind.
   3. After satisfactory conclusion of initial compaction demonstration and at any time during construction, provide confirmation tests as specified under "FIELD QUALITY CONTROL."

1.07 SEQUENCING AND SCHEDULING

A. Schedule earthwork operations to meet requirements specified in this Section for excavation and uses of excavated material.

B. If necessary, stockpile excavated material in order to use it at specified locations.

C. Excavation, backfilling, and filling: Perform excavation, backfilling, and filling during construction in manner and sequence that provides drainage at all times.

PART 2 PRODUCTS

2.01 MATERIALS

A. Water for compacting: Use water from source acceptable to Engineer.

B. Soil and rock materials:
   1. General:
      a. Provide aggregate base course, Class 2 permeable, controlled low-strength material, drain rock, gravel, native material, sand, select material, and stabilization material where specified or indicated on the Drawings.
      b. If suitable surplus materials are available, obtain native material and select material from cut sections or excavations or imported materials.
   2. Aggregate base course materials: As specified in Section 02050 - Soils and Aggregates for Earthwork.
   3. Class 2 permeable: As specified in Section 02050 - Soils and Aggregates for Earthwork.
   4. Drain rock: As specified in Section 02050 - Soils and Aggregates for Earthwork.
   5. Gravel: As specified in Section 02050 - Soils and Aggregates for Earthwork.
   6. Native material: As specified in Section 02050 - Soils and Aggregates for Earthwork.
   7. Sand: As specified in Section 02050 - Soils and Aggregates for Earthwork.
   8. Select material: As specified in Section 02050 - Soils and Aggregates for Earthwork.
   9. Stabilization material: As specified in Section 02050 - Soils and Aggregates for Earthwork.

C. Controlled low-strength material: As specified in Section 02312 - Controlled Low Strength Materials (CLSM).
   1. Geotextile fabrics: Filter fabric and stabilization fabric: As specified in FDOT Standard Specification for Road and Bridge Construction, Latest Edition.

PART 3 EXECUTION

3.01 EXAMINATION

A. Verification of conditions:
   1. Character and quantity of material:
      a. Verify character and quantity of rock, gravel, sand, silt, water, and other inorganic or organic materials to be encountered in work to be performed.
      b. Determine gradation, shrinkage, and swelling of soil, and suitability of material for use intended in work to be performed.
      c. Determine quantity of material, and cost thereof, required for construction of backfills, cuts, embankments, excavations, fills, and roadway fills, whether from onsite excavations or imported materials. Include in cost of work to be performed.
      d. Include wasting of excess material, if required, in cost of work to be performed.

3.02 PREPARATION

A. Backfills:
   1. After clearing and excavation are completed, scarify entire areas that underlie backfills or structures to a depth of 6 inches and until surface is free of ruts, hummocks, and other features that would prevent uniform compaction by equipment to be used.
   2. Recompact scarified areas to density specified before placing backfill material or concrete.
   3. If foundation areas have soft soils, do not scarify the top 6 inches prior to compaction. Remove all loose material using hand equipment or with a flat-edged backhoe bucket. Do not remold and weaken the remaining soil by operating heavy equipment on final bottom elevation of excavation.
   4. If foundation areas have cemented rock, cobbles, or boulders, do not scarify the top 6 inches prior to compaction. Moisten the native soil and compact the coarse fill as specified in this Section.
   5. Do not place backfill against walls until:
      a. Walls have been cast full height of structure and concrete has reached the specified strength.
      b. Connecting slabs and beams have been cast, and concrete has reached the specified strength.
   6. Prior to backfilling:
      a. Remove all forms.
      b. Clean all trash and debris from the excavation site.
   7. After inspection of foundation, walls, and pipes, place backfill symmetrically around structures to prevent eccentric loading of structures.

B. Embankments:
   1. After clearing is completed, scarify entire areas that underlie embankments to a depth of 6 inches and until surface is free of ruts, hummocks, and other features that would prevent uniform compaction by equipment to be used.
   2. Recompact scarified areas to density specified for embankments before placing of embankment material.
   3. If embankment areas have cemented rock, cobbles, or boulders, do not scarify the top 6 inches prior to compaction. Moisten the native soil and compact the coarse fill as specified in this Section.

C. Fills:
   1. After clearing is completed, scarify entire areas that underlie fill sections or structures to a depth of 6 inches and until surface is free of ruts, hummocks, and other features that would prevent uniform compaction by equipment to be used.
   2. Recompact scarified areas to density specified for compacted fills before placing of fill material or concrete.
   3. If fill areas have cemented rock, cobbles, or boulders, do not scarify the top 6 inches prior to compaction. Moisten the native soil and compact the coarse fill as specified in this Section.

D. Roadway fills:
   1. After clearing is completed, scarify entire areas that underlie roadway fills to a depth of 6 inches and until surface is free of ruts, hummocks, and other features that would prevent uniform compaction by equipment to be used.
   2. Recompact scarified areas to density specified for roadway fills before placing of roadway fill material.
   3. If roadway fill areas have cemented rock, cobbles, or boulders, do not scarify the top 6 inches prior to compaction. Moisten the native soil and compact the coarse fill as specified in this Section.

E. Sloped surfaces for fill or foundations:
   1. Foundations for fill having slopes in excess of 1 vertical to 4 horizontal:
      a. Bench or terrace to adequately key existing ground and fill built thereon.
   2. Slopes of original hillsides and old fills: Bench minimum of 10 feet horizontally as fill is placed.
   3. Provision of new benches:
      a. Start new bench wherever vertical cut of next lower bench intersects existing grade.
      b. Recompact material thus cut out along with new embankment material at no additional cost to the Owner.

3.03 INSTALLATION

A. General:
   1. Dispose of excavated materials that are not required or are unsuitable for fill and backfill in lawful manner.
   2. Dispose of surplus material on private property only when written permission agreement is furnished by owner of property. Submit copies of such agreements.
   3. Obtain material required in excess of suitable material produced by cuts and excavation, from borrow areas subject to the material requirements specified.
   4. Rocks, broken concrete, or other solid materials larger than 4 inches in greatest dimension: Remove from project site at no additional cost to the Owner.
   5. Stabilization of subgrade: Provide materials used, or perform work required, to stabilize subgrade so it can withstand loads that may be placed upon it by Contractor's equipment.

B. Borrow area: There is no borrow area on Project site.
   1. Where material is required, import material from source located off Project site selected by the Contractor and subject to acceptance by the Engineer.
   2. There will be no additional cost to the Owner for use of imported material.

C. Compaction:
   1. Provide specified compaction for backfills, cuts, embankments, fills, roadway fills, and other earthwork.
   2. Perform confirmation tests to verify and confirm that work has complied, and is complying at all times, with compaction requirements specified in this Section for initial compaction demonstration and field quality control testing.
   3. In-place density of compacted backfills, cuts, embankments, fills, and roadway fills determined in accordance with ASTM D1556, or with ASTM D6938.

4. Maximum density obtained in laboratory when tested in accordance with ASTM D1557.
5. To prevent damage to structures due to backfilling operations, place backfill with equipment that does not exceed H-20 loading, within a distance from the face of the structure of not less than 1/2 the depth of backfill. The depth of backfill is the distance between the level being compacted and the bottom of the excavation. Outside this distance, heavier compaction equipment may be used.
6. Compact to percentage of maximum density as follows:
    a. Backfill adjacent to structures: 95 percent.
    b. Backfilling voids: 95 percent.
    c. Demolition areas: As indicated on the Drawings.
    d. Loose fill:
        1) No compaction other than by hauling vehicles will be required.
        2) Uniformly distribute travel of vehicles over fill area as required to provide uniformly compacted surface.
    e. Other areas: 85 percent.
    f. Under present and future structures: 95 percent.
    g. Under roadways, parking and storage areas, curbs, and sidewalks: 95 percent.
    h. Upper 6 inches of cuts: 95 percent.
    i. Fills: 95 percent.

D. Excavation:
1. Blasting: Not permitted.
2. Excavations for structures:
    a. Provide excavations conforming to dimensions and elevations indicated on the Drawings for each structure, including trenching for piping and all work incidental thereto.
    b. After clearing is complete, excavate for the structure, down to the elevation indicated on the Drawings. Unless directed by Engineer, do not carry excavations below elevation indicated on the Drawings.
    c. Where soil is encountered having unsuitable bearing value, Engineer may direct in writing that excavation be carried to elevations below those indicated on the Drawings.
    d. Where excavations are made below elevations indicated on the Drawings, adjust elevations of excavations in accordance with the following requirements:
        1) Under slabs: Restore to proper elevation in accordance with procedure specified for backfill in this Section.
        2) Under footings: Restore to the proper elevation using one of the following:
            a) Aggregate base course.
            b) Controlled low-strength material.
    e. Excavation width:
        1) Extend excavations at least 2 feet clear from walls and foundations of structures to allow for placing and removal of forms, installation of services, and inspection.
        2) Do not undercut slopes.
    f. Difficulty of excavation: No extra compensation will be made for removal of rock or any other material due to difficulty of excavation.

3. Excavation of lined channels:
    a. Excavations in open cut for lined channels may be made so as to place concrete directly against excavated surfaces providing faces of excavations are:
        1) Firm and unyielding.
        2) Will stand or can be made to stand without sloughing.
    b. Excavations to provide subgrade for lined channel or subdrainage material: Excavate to lines and grades indicated on the Drawings.
4. Excavation of unlined channels and basins:
    a. Excavate to lines and grades indicated on the Drawings.
    b. Perform excavation and grading so that finish surfaces are in uniform planes with no abrupt breaks in surface.
5. Excavation of ditches and gutters:
    a. Cut ditches and gutters accurately to cross sections and grades indicated on the Drawings.
    b. Take care not to excavate ditches and gutters below grades indicated on the Drawings.
    c. Backfill excessive ditch and gutter excavations to grade with suitable material acceptable to the Engineer.
    d. Do not deposit any material within 3 feet of edge of ditch unless otherwise indicated on the Drawings.
6. Necessary over excavation:
    a. Where it becomes necessary to excavate beyond normal lines of excavation in order to remove boulders or other interfering objects, backfill voids remaining after removal as specified in backfilling of voids below, or as acceptable to the Engineer.
    b. Backfill voids with material acceptable to the Engineer:
        1) With acceptance of the Engineer, backfill with one of the following:
            a) Aggregate base course.
            b) Controlled low-strength material.

E. Materials for backfills, embankments, fills, and roadway fills:
1. General:
    a. Obtain import material from other sources if surplus materials from cuts and excavations obtained from within Project site or borrow areas do not conform to specified requirements or are not sufficient in quantity for construction of Project.
2. Backfills:
    a. Backfill adjacent to structures, slabs, or walls: Native material or imported material meeting the requirements of select material, unless otherwise specified or indicated on the Drawings.
    b. Backfill material under concrete structures: Aggregate base course material, except in areas where controlled low-strength material or concrete encasement are indicated on the Drawings.
    c. Extend backfill in any area under concrete structures from undisturbed soil or rock to the bottom aggregate base course material layer.
3. Fills:
    a. Imported material meeting the requirements of select material, unless otherwise specified or indicated on the Drawings.
    b. Extend fill in any area under concrete structures from undisturbed soil or rock to the bottom aggregate base course material layer.

4. Roadway fills: One of the following, unless otherwise specified or indicated on the Drawings:
    a. Aggregate base course material.
    b. Native material or imported material meeting the requirements of select material.

F. Placement:
1. General:
    a. Lines and grades:
        1) Construct backfills, embankments, fills, and road fills, at locations and to lines and grades indicated on the Drawings.
        2) Overbuild all permanent fill slopes by at least 1 foot and then cut to final grade to provide adequate compaction of the remaining fill.
2. Backfills:
    a. Place loose material in successive layers that do not exceed 8 inches in depth after compaction.
    b. Bring each layer to a moisture content within 2 percent of optimum moisture content before compacting.
    c. Defective compacted backfills: Remove and recompact.
3. Fills:
    a. Place loose material in successive layers that do not exceed 8 inches in depth after compaction.
    b. Bring each layer to a moisture content within 2 percent of optimum moisture content before compacting.
    c. Defective compacted fills: Remove and recompact.
4. Roadway fills:
    a. Place loose material in successive layers that do not exceed 8 inches in depth after compaction.
    b. Bring each layer to a moisture content within 2 percent of optimum moisture content before compacting.
    c. Defective compacted roadway fills: Remove and recompact.
5. Loose fill:
    a. In disposal areas: In disposal areas as indicated on the Drawings, bring fill up in an essentially level layer over entire spoil area indicated:
        1) Continue filling spoil area until disposal of surplus excavated material is completed.
        2) Slope edges of fill area at between 1 and 2 horizontal to 1 vertical to the intersection with existing grade.
        3) Provide slopes that are smooth and uniform.
        4) Level finished surface of disposal area to within 4 inches of elevation indicated on the Drawings.

3.04 FIELD QUALITY CONTROL

A. Tests:
1. Confirmation tests:
    a. Contractor's responsibilities:
        1) Accomplish specified compaction for backfills, fills, and other earthwork.

2) Control operations by confirmation tests to verify that compaction work complies, and is complying at all times, with requirements specified in this Section concerning compaction, control, and testing.
3) Cost of confirmation tests: Paid for by the Contractor.
4) Qualifications of Contractor's testing laboratory: Perform confirmation testing by soils testing laboratory acceptable to the Engineer.
5) Copies of confirmation test reports: Submit promptly to the Engineer.

b. Frequency of confirmation testing:
1) Perform testing not less than the following:
a) In-place density:
(1) Backfill: Once daily.
(2) Cuts: Once daily.
(3) Fills: Once daily.
(4) Roadway fills: Once daily.
b) Maximum dry density versus moisture:
(1) Backfill: Same as in-place density testing.
(2) Cuts: Same as in-place density testing.
(3) Fills: Same as in-place density testing.
(4) Roadway fills: Same as in-place density testing.

2. Compliance tests:
a. Periodic compliance tests will be made by the Engineer to verify that compaction is meeting requirements previously specified.
b. Remove overburden above level at which the Engineer wishes to test. Backfill and recompact excavation after testing is completed.
c. If compaction fails to meet specified requirements, perform remedial work by one of the following methods:
1) Remove and replace materials at proper density.
2) Bring density up to specified level by other means acceptable to the Engineer.
d. Retesting:
1) Contractor bears the costs of retesting required to confirm and verify that remedial work has brought compaction within specified requirements.
2) Contractor's confirmation tests during performance of remedial work: Double the normal rate specified.

B. Tolerances:
1. Finish grading of backfills, cuts, embankments, fills, and roadway fills:
a. Perform fine grading under concrete structures such that finish surfaces are never above the grade or cross section indicated on the Drawings and are never more than 0.10 foot below.
b. Provide finish surface for areas outside of structures that are within 0.10 feet of grade or cross section indicated on the Drawings.
2. Unlined channels and basins:
a. In both cut and fill, and levee and access road side slopes in cut: Vertical tolerance of none above and 3 inches below grade indicated on the Drawings on bottom and side slopes.
b. On top surface of levee and access road in both cut and fill, and levee and access road side slopes in fill: Vertical tolerance of none below and 3 inches above grade indicated on the Drawings.

3. Areas which are not under structures, concrete, asphalt, roads, pavements, sidewalks, dikes, and similar facilities:
    a. Provide finish graded surfaces of either undisturbed soil, or cohesive material not less than 6 inches deep.
    b. Intent of proceeding is to avoid sandy or gravelly areas.
4. Finish grading of surfaces:
    a. Reasonably smooth, compacted, and free from irregular surface changes.
    b. Provide degree of finish that is ordinarily obtainable from blade grader operations, except as otherwise specified.
    c. Uniformly grade areas that are not under concrete.
    d. Finish ditches and gutters so that they drain readily.

3.05 ADJUSTING

A. Finish grades of excavations, backfills, and fills:
    1. Repair and reestablish grades to required elevations and slopes due to any settlement or erosion that may occur from action of the elements or any other cause prior to final acceptance.

3.06 PROTECTION

A. Finish grades of backfills, cuts, excavations, and fills:
    1. Protect newly graded areas from erosion and deterioration by action of the elements.

B. Ditches and gutters:
    1. Maintain ditches and gutters free from detrimental quantities of debris that might inhibit drainage until final acceptance.

END OF SECTION

SECTION 02312

CONTROLLED LOW STRENGTH MATERIAL (CLSM)

PART 1 GENERAL

1.01 SUMMARY

A. Section includes: Controlled low strength material (CLSM), also known as “flowable fill.”

B. Related sections:
   1. The Contract Documents are complementary; what is called for by one is as binding as if called for by all.
   2. It is the Contractor’s responsibility for scheduling and coordinating the Work of subcontractors, suppliers, and other individuals or entities performing or furnishing any of Contractor’s Work.

1.02 REFERENCES

A. American Concrete Institute (ACI)
   1. 229R - Report on Controlled Low-Strength Materials.
   2. 301 - Specifications for Structural Concrete.

B. ASTM International (ASTM):
   1. C33 - Standard Specification for Concrete Aggregates.
   2. C94 - Standard Specification for Ready Mix Concrete.
   3. C143 - Standard Test Method for Slump of Hydraulic Cement Concrete.
   4. C150 - Standard Specification for Portland Cement.
   5. C260 - Standard Specification for Air-Entraining Admixtures for Concrete.
   6. C494 - Standard Specification for Chemical Admixtures for Concrete.
   7. C618 - Standard Specification for Coal Fly Ash and Raw or Calcined Natural Pozzolan for Use in Concrete.
   8. D1557 - Standard Test Methods for Laboratory Compaction Characteristics of Soil Using Modified Effort (56,000 ft-lbf/ft3(2,700 kN-m/m3)).
   9. D4832 - Standard Test Method of Preparation and Testing of Controlled Low Strength Material (CLSM) Test Cylinders.
   10. D5971 - Standard Practice for Sampling Freshly Mixed Controlled Low Strength Material.
   11. D6023 - Standard Test Method for Density (Unit Weight), Yield, Cement Content, and Air Content (Gravimetric) of Controlled Low-Strength Material.

1.03 SYSTEM DESCRIPTION

A. Mixture of portland cement, water, pozzolan, fine aggregate and admixtures, proportioned in accordance with the recommendations of ACI 229 to produce a homogeneous mixture that is flowable, that will readily work into corners and angles; that will not segregate in the plastic state; and that is self-compacting at the time of placement without the use of mechanical vibration.

B. Performance requirements:
   1. Air content, total calculated in accordance with ASTM D6023: Not less than 8.0 percent, nor greater than 12.0 percent.
   2. Compressive strength, measured in accordance with ASTM D4832 at 28 days: Not less than 50 pounds per square inch, nor greater than 150 pounds per square inch.
   3. Wet density: Not greater than 132 pounds per cubic foot.
   4. Slump, measured in accordance with ASTM C143 at the point of placement: Greater than 9 inches and that allows CLSM to flow freely and to be self-compacting during placement.

1.04 SUBMITTALS

A. Product data: Submit data completely describing materials in the mix and demonstrating compliance with the requirements of this Section.
   1. Cement: Mill tests. Indicate alkali content representative of each shipment.
   2. Fly ash: Identify source and type of fly ash.
   3. Water: Identify source and quality if not from a municipal treatment source.
   4. Admixtures: Manufacturer's product data indicating suitability for use in CLSM mixes and recommended dosage rates.
   5. Aggregate:
      a. Submit source, type, and sieve analyses.
      b. Resubmit at any time there is a significant change in grading of materials.

B. Mix design:
   1. Submit full details, including mix design calculations for mix proposed for use.
   2. Trial batch test data:
      a. Submit data for each test cylinder.
      b. Submit data that identifies mix and slump for each test cylinder.

1.05 DELIVERY, STORAGE AND HANDLING

A. Store or stockpile cement, fly ash, and aggregate in accordance with ACI 301.

B. Store admixtures in accordance with the manufacturer's recommendations.

PART 2 PRODUCTS

2.01 MATERIALS

A. Cement:
   1. Portland cement in accordance with ASTM C150, Type II.
   2. Having total alkali content not more than 0.60 percent.

B. Fly ash: Class C or Class F fly ash in accordance with ASTM C618.

C. Water:
   1. Potable water. Clean and free from oil and deleterious amounts of alkali, acid, organic matter, or other substances.

D. Admixtures: Products of a single manufacturer, specifically manufactured or recommended by that manufacturer for use in CLSM.
   1. Air entraining admixture: In accordance with ASTM C260.
   2. Water reducing admixture: In accordance with ASTM C494, Type A.

E. Aggregate:
   1. Non-expansive, non-reactive, inert natural sand in accordance with ASTM C33 for fine aggregate.

2.02 MIXES

A. See System Description for performance requirements of the plastic and hardened mix.

2.03 SOURCE QUALITY CONTROL

A. Trial batch:
   1. After mix design has been accepted by Engineer, have trial batch of the accepted mix design prepared by testing laboratory acceptable to Engineer.
   2. Prepare trial batches using the specific cement, fly ash, admixtures, aggregates, and water proposed for the Work.
   3. Prepare trial batch with quantity sufficient to determine slump, workability, and consistency; and to provide test cylinders as indicated in the following paragraphs.

B. Trial batch testing:
   1. Determine slump in accordance with ASTM C143, with the following modifications:
      a. Do not rod the concrete material.
      b. Place material in slump cone in one semi-continuous filling operation, slightly overfill, tap lightly, strike off, and then measure and record slump.
   2. Prepare and test trial batch specimens in accordance with ASTM D4832, with the following modifications:
      a. Provide cylindrical test specimens, each 6-inches in diameter by 12-inch high.
      b. Provide a minimum of 8 cylinders for testing of each trial batch.
      c. Fill the molds to overflowing and tap sides lightly to settle the mix.
      d. Do not rod the mix for consolidation in the cylinder.
      e. Strike off the excess material.
   3. Place test cylinders in a moist curing room. Exercise caution in moving and transporting the cylinders since they are fragile and will withstand only minimal bumping, banging, or jolting without damage.
   4. Do not remove the test cylinder from mold until that cylinder is to be capped and tested.
      a. Perform the capping carefully to prevent premature fractures.
      b. Do not perform initial compression test until the cylinders reach a minimum age of 3 days.

5. Provide compressive strength tests.
    a. Test 4 test cylinders at 7 days after casting, and another 4 cylinders at 28 days after casting.
    b. The compression strength of the 4 test cylinders tested at 28 days shall be equal to or greater than the minimum required compression strength, but shall not exceed maximum compression strength.

C. If the trial batch tests do not meet the Specifications for strength or density, revise and re-submit the mix design, prepare additional trial batch(es), and complete additional trial batch tests. Repeat until an acceptable trial batch is that conforms to the Specifications is produced.
    1. All the trial batches and acceptability of materials shall be paid by the Contractor.
    2. After acceptance, do not change the mix design without submitting a new mix design, trail batches, and test information.

PART 3 EXECUTION

3.01 PREPARATION

A. Do not place CLSM until preparation and condition of surfaces receiving the fill have been observed and accepted by the Engineer.

B. Remove debris foreign matter, and standing or running water from excavations and areas receiving CLSM before placement.

C. Pipes and trenches.
    1. Where CLSM is placed around and over pipes, secure pipes in place, or place CLSM in lifts to prevent pipe flotation.
    2. Where CLSM is placed in long, open trenches, confine material using bulkheads of sandbags, earth dams, or stiffer concrete at open ends of placement.

3.02 MEASURING, BATCHING, MIXING AND TRANSPORTING

A. Measure, batch, mix and transport CLSM in accordance with the requirements of ASTM C94 and this Section.

B. Mix until there is uniform distribution of materials.

C. Discharge mixer completely prior to recharging.

D. After trial batch testing and mix acceptance, maintain slump during construction within plus or minus 1 inch of the design slump.

3.03 PLACING

A. Place controlled low strength material by method that preserves the quality of the material in terms of compressive strength and density.

B. Maintain fluid properties of the mix during placement.
   1. At point of placement, provide material that flows easily around, beneath, or through walls, pipes, conduits, or other structures.
   2. Do not place CLSM that has partially hardened or that has been contaminated by foreign materials.
   3. Handle and place CLSM using methods that minimize segregation of the mix.
   4. Deposit mix as near its final position as possible to avoid segregation due to rehandling or flowing.
   5. Contain and confine mix while it is fluid. Design containment structures and bracing at walls and forms to withstand lateral pressures of wet mix.

C. Lifts:
   1. Limit lift heights of CLSM placed against structures and other facilities that could be damaged due to the pressure from the CLSM, to the lesser of 3 feet or the lift height indicated on the Drawings.
   2. Do not place another lift of CLSM until the last lift of CLSM has set and gained sufficient strength to prevent additional lateral load against the forms or structure due to the weight of the next lift of CLSM.

D. Water conditions:
   1. Do not place CLSM in standing or flowing water.
   2. Do not permit water to flow over the surface of freshly placed or un-hardened CLSM.
   3. Do not submerge CLSM in water within 24 hours after placement.

E. Manage CLSM bleed water.
   1. Grade top surface of CLSM to drain away from the fill.
   2. Provide side containment that permits bleed water to drain to a contained management area away from the fill.

3.04 CURING AND PROTECTION

A. Curing;
   1. Prior to and during curing, install barriers to prevent equipment or personnel from falling into or becoming entrapped in CLSM.

B. Protect CLSM from:
   1. Damage from the elements.
   2. Damage of any nature during surrounding construction operations.

3.05 FIELD QUALITY CONTROL

A. Provide quality control over the Work of this Section as specified in Sections 01450 - Quality Control and as specified in this Section.

B. General:
   1. Engineer inspection and acceptance required prior to placement.
   2. Make provisions for and furnish all material for the test specimens, and provide testing of said specimens.

C. Field sampling and testing:
   1. During construction, Contractor shall provide sampling and testing to determine whether the CLSM, as produced and placed, complies with the requirements specified.
   2. Sample CLSM for testing in accordance with ASTM D5971.
   3. Required tests:
      a. Air content: Prepare sample and test in accordance with ASTM D6023.
      b. Compressive strength: Prepare and test cylinder specimens in accordance with ASTM D4832.
         1) Prepare 6-inch diameter by 12-inch high specimens for testing.
            a) Provide one set of specimens for each 150 cubic yards of CLSM placed, but not less than 1 set for each half day's placement.
            b) Prepare and test not less than 3 cylinders for each set.
            c) Place CLSM in the molds in accordance with ASTM D4832. Do not rod or otherwise consolidate the material in the mold.
            d) In accordance with ASTM D4832 recommendations for displacing bleed water at the top of the molds and refilling the molds before covering with a lid. Do not use air-tight lids.
         2) Place the cylinders in a safe location away from construction activities.
            a) Protect cylinders from bumping and impact.
            b) Maintain temperature surrounding cylinders between 60 and 80 degrees Fahrenheit until delivery to the laboratory for testing.
            c) After the first day, surround molds with a high humidity environment by covering with wet burlap, or equivalent highly absorptive material. Maintain saturation of the cover. Do not sprinkle water directly on the cylinders.
         3) After 4 days, place the cylinders in a protective container for transport to the laboratory for testing.
            a) Exercise caution in moving and transporting the cylinders since they are fragile and will withstand only minimal bumping, banging, or jolting without damage.
            b) Transport container may be a box with a Styrofoam or similar lining that will limit jarring and bumping of the cylinders.
         4) Upon receipt at the testing laboratory, place test cylinders in a moist curing room until dates for testing.
         5) Do not remove test cylinders from molds until the day that cylinders is to be capped and tested.
         6) Cap and test for compressive strength in accordance with ASTM D4832.
            a) Do not perform initial compression test until the cylinders reach an age of at least 4 days.
            b) Test 1 cylinder at 7 days and 2 at 28 days.
         7) Compressive strength of the cylinders tested at 28 days shall be equal to or greater than the minimum required compression strength, but shall not exceed maximum compression strength specified.

3.06 NON-CONFORMING WORK

A. When testing or observation indicates CLSM with properties outside the specified and accepted range, Engineer will issue instructions regarding disposition of nonconforming materials.

B. Engineer may:
   1. Reject CLSM represented by those test specimens and require its removal and replacement.
   2. Require modification of the mix design to provide CLSM with the properties specified.

C. Make such modifications at no additional expense to the Owner and with no adjustment to the schedule.

END OF SECTION

SECTION 02952

PAVEMENT RESTORATION AND REHABILITATION

PART 1 GENERAL

1.01 SUMMARY

A. Section includes:
   1. Resurfacing roads and paved surfaces in which surface is removed or damaged by installation of new work.

1.02 SUBMITTALS

A. Mix designs:
   1. Prior to placement of asphalt concrete, submit full details, including design and calculations for the asphalt concrete mix proposed.
   2. Submit gradation of aggregate base.
   3. Submit proposed mix design of portland cement concrete.

PART 2 PRODUCTS

2.01 DESIGN AND PERFORMANCE CRITERIA

A. Performance requirements:
   1. Limiting dimensions:
      a. Determine the exact lengths and dimensions of such roads, pavements, parking areas, and walks that will require removal and replacement for new work.
      b. Join existing surfaces to terminals of new surfacing in smooth juncture.

2.02 EQUIPMENT

A. Roads, pavements, parking areas, and walks:
   1. Equipment requirements: Good condition, capable of performing work intended in satisfactory manner.

PART 3 EXECUTION

3.01 INSTALLATION

A. Curb, gutter, and sidewalk replacement:
   1. Where any concrete curb, gutter, or sidewalk has been removed, damaged, or displaced, replace to nearest construction joints with new Class A curb, gutter, or sidewalk to same dimensions and finish as original construction that was removed:
      a. Provide expansion joints of same spacing and thickness as original construction.

END OF SECTION

SECTION 03055

ADHESIVE-BONDED REINFORCING BARS AND ALL THREAD RODS IN CONCRETE

PART 1 GENERAL

1.01 SUMMARY

A. Section includes: Bonding reinforcing bars and all thread rods in concrete using adhesives.

1.02 REFERENCES

A. American Concrete Institute (ACI).
   1. 355.4 - Qualification of Post-Installed Adhesive Anchors in Concrete and Commentary.

B. American National Standards Institute (ANSI):
   1. Standard B212.15 - Carbide Tipped Masonry Drills and Blanks for Carbide Tipped Masonry Drills.

C. ASTM international (ASTM):
   1. C881 - Standard Specification for Epoxy-Resin-Base Bonding Systems for Concrete.

D. Concrete Reinforcing Steel Institute (CRSI).

E. ICC Evaluation Service, Inc. (ICC-ES):
   1. AC308 - Acceptance Criteria for Post-Installed Adhesive Anchors in Concrete Elements.

F. Society for Protective Coatings (SSPC):
   1. SP-1 - Solvent Cleaning.

1.03 DEFINITIONS

A. Evaluation Service Report (ESR): Report prepared by ICC-ES, or other testing agency acceptable to Engineer and to the Building Official, that documents testing and review of a product to confirm that it complies with the requirements of designated ICC-ES Acceptance Criteria, and to document its acceptance for use under the Building Code specified in Section 01410 - Regulatory Requirements.

1.04 SUBMITTALS

A. Product data: Technical data for adhesives, including:
   1. Manufacturer's printed installation instructions (MPII).
   2. Independent laboratory test results indicating allowable loads in tension and shear for concrete of the types included in this Work, with load modification factors for temperature, spacing, edge distance, and other installation variables.
   3. Handling and storage instructions.

B. Quality control submittals:
    1. Special inspection: Detailed step-by-step instructions for the special inspection procedures required by the building code specified in Section 01410 - Regulatory Requirements.
    2. For each adhesive to be used, Evaluation Report confirming that the product complies with the requirements of AC308 for both un-cracked and cracked concrete and for use in Seismic Design Categories A through F.
    3. Installer qualifications:
        a. Submit evidence of successful completion of adhesive manufacturer's installation training program.
        b. Submit evidence of current certification for installation of inclined and overhead anchors under sustained tension loading.

C. Inspection and testing reports:
    1. Inspections: Field quality control: Reports of inspections and tests.
        a. Inspections: Field quality assurance: Reports of special inspections and tests.

1.05 QUALITY ASSURANCE

A. Qualifications:
    1. Installation requirements:
        a. Have available at the site, and install anchors in accordance with, the adhesive manufacturer's printed installation instructions.
    2. Installer qualifications:
        a. Demonstrating successful completion of adhesive manufacturer's on-site training program for installation of adhesive-bonded anchors.
        b. Holding current certification for installation of adhesive-bonded anchors by a qualified organization acceptable to the Engineer and to the Building Official.
            1) Organizations/certification programs deemed to be qualified are:
                a) ACI-CRSI Adhesive Anchor Installer Certification Program.
                b) Adhesive anchor manufacturer's certification program, subject to acceptance by the Engineer and the Building Official.

1.06 DELIVERY, STORAGE, AND HANDLING

A. Store and protect products as follows, unless more restrictive requirements are recommended by the manufacturer:
    1. Store adhesives and adhesive components on pallets or shelving in a covered-storage area protected from weather.
    2. Control temperature to maintain storage within manufacturer's recommended temperature range.
        a. If products have been stored at temperatures outside manufacturer's recommended range, test by methods acceptable to the Engineer to confirm acceptability before installing in the Work.
    3. Dispose of products that have passed their expiration date.

1.07 PROJECT CONDITIONS

A. As specified in Section 01850 - Design Criteria.

PART 2 PRODUCTS

2.01 GENERAL

A. Like items of materials: Use end products of one manufacturer in order to achieve structural compatibility and singular responsibility.

B. Adhesives shall have a current Evaluation Report documenting testing and compliance with the requirements or ACI 355.4 and of ICC-ES AC308 for use with un-cracked concrete and with cracked concrete in the Seismic Design Category specified.

C. Bond reinforcing bars and all thread rods in concrete using epoxy adhesive unless other adhesives specified are specifically indicated on the Drawings or approved in writing by the Engineer.

2.02 EPOXY ADHESIVE

A. Materials:
   1. Meeting the physical requirements of ASTM C881, Type IV, Grade 3, Class B or C depending on site conditions.
   2. 2-component, 100 percent solids, insensitive to moisture.
   3. Cure temperature, pot life, and workability: Compatible with intended use and environmental conditions.

B. Packaging:
   1. Disposable, self-contained cartridge system furnished in side-by-side cartridges designed to fit into a manually or pneumatically operated caulking gun, and with resin and hardener components isolated until mixing through manufacturer's static mixing nozzle.
      a. Nozzle designed to dispense components in the proper ratio and to thoroughly blend the components for injection from the nozzle directly into prepared hole.
      b. Provide nozzle extensions as required to allow full-depth insertion and filing from the bottom of the hole.
   2. Container markings: Include manufacturer's name, product name, batch number, mix ratio by volume, product expiration date, ANSI hazard classification, and appropriate ANSI handling precautions.

C. Manufacturers: One of the following or equal:
   1. Hilti, Inc., HIT-RE 500-V3.
   2. Simpson Strong-Tie Co., Inc., SET-XP.

2.03 ALL THREAD RODS

A. Materials: As specified in Section 05190 - Mechanical Anchoring and Fastening to Concrete and Masonry.

PART 3 EXECUTION

3.01 GENERAL

A. Execution of this work is restricted to installers who have personally completed the adhesive manufacturer's on-site training for the products to be installed, and who are personally certified through a qualified certification program described under Quality Assurance and accepted by the Engineer and the Building Official.
   1. Do not install holes or adhesive until training is complete.

B. Perform work in strict compliance with the accepted MPII and the following instructions. Where the accepted MPII and the instructions conflict, the MPII shall prevail.

C. Install reinforcing bars and all thread rods to embedment depth, and at spacing and locations indicated on the Drawings.
   1. If embedment depth is not indicated, contact Engineer for requirements.

3.02 PREPARATION

A. Do not begin installation of adhesive bonded anchors until:
   1. Concrete has achieved an age of at least 21 days after placement.
   2. On-site training in installation of adhesive bonded anchors by manufacturer's technical representative is complete. Do not drill holes in concrete or install adhesive and embeds in holes.

B. Review manufacturer's printed installation instructions (MPII) and "conditions of use" stipulated in the Evaluation Report before beginning work.
   1. Bring to the attention of the adhesive manufacturer's technical representative any discrepancies between these documents and resolve before proceeding with installation.

C. Install adhesive bonded anchors in full compliance with manufacturer's printed installation instructions using personnel who have successfully completed manufacturer's on-site training for products to be used and who hold certifications specified in this Section.

D. Confirm that adhesive and substrate receiving adhesive are within manufacturer's recommended range for temperature and moisture conditions, and will remain so during the curing time for the product.

3.03 HOLE SIZING AND INSTALLATION

A. Drilling holes:
   1. Determine location of reinforcing bars or other obstructions with a nondestructive indicator device, and mark locations with construction crayon on the surface of the concrete.
   2. Do not damage or cut existing reinforcing bars, electrical conduits, or other items embedded in the existing concrete without prior acceptance by Engineer.

B. Hole drilling equipment:
   1. Electric or pneumatic rotary impact type with medium or light impact.
      a. Installation of anchors in cored holes is not permitted.
      b. Set drill to "rotation only" mode, or to "rotation plus hammer" mode in accordance with the manufacturer's installation instructions and the requirements of the Evaluation Report.
      c. Where edge distances are less than 2 inches and "rotation plus hammer" mode is permitted, use lighter impact equipment to prevent micro-cracking and concrete spalling during the drilling process.
   2. Drill bits: Carbide-tipped in accordance with ANSI B212-15 unless otherwise recommended by the manufacturer or required as a "condition of use" in the Evaluation Report.
      a. Hollow drill bits with flushing air systems are preferred. Air supplied to hollow drill bits shall be free of oil, water, or other contaminants that will reduce bond.

C. Hole diameter: As recommended in the manufacturer's installation instructions and the Evaluation Report.

D. Hole depth: As recommended in the manufacturer's installation instructions to provide minimum effective embedment indicated on the Drawings.

E. Obstructions in drill path:
   1. If an existing reinforcing bar or other obstruction is hit while drilling a hole, unless otherwise accepted by Engineer, stop drilling. Prepare and fill the hole with dry-pack mortar. Relocate the hole to miss the obstruction and drill another hole to the required depth.
      a. Obtain Engineer's acceptance of distance between abandoned and relocated holes before proceeding with the relocation.
      b. Allow dry-pack mortar to cure to a strength equal to that of the surrounding concrete before resuming drilling in the area.
      c. Epoxy grout may be substituted for dry-pack mortar when accepted by Engineer.
   2. Avoid drilling an excessive number of holes in an area of a structural member, which would excessively weaken the member and endanger the stability of the structure.
   3. When existing reinforcing steel is encountered during drilling and when specifically accepted by Engineer, enlarge the hole by 1/8 inch, core through the existing reinforcing steel at the larger diameter, and resume drilling at original hole diameter using pneumatic rotary impact drill.
   4. Bent bar reinforcing bars: Where edge distances are critical, and interference with existing reinforcing steel is likely, if acceptable to Engineer, drill hole at 10 degree (or less) angle from axis of reinforcing bar or all thread rod being installed.

F. Cleaning holes:
   1. Insert air nozzle to bottom of hole and blow out loose dust.
      a. Use compressed air that is free of oil, water, or other contaminants that will reduce bond.
      b. Provide minimum air pressure of 90 pounds per square inch for not less than 4 seconds.

2. Using a stiff bristle brush with diameter that provides contact around the full perimeter of the hole, vigorously brush hole to dislodge compacted drilling dust.
    a. Insert brush to the bottom of the hole and withdraw using a simultaneous twisting motion.
    b. Repeat at least 4 times.
3. Repeat the preceding steps as required to remove drilling dust or other material that will reduce bond, and in the number of cycles required by the MPII and the Evaluation Report.
4. Leave prepared holes clean and dry.
5. Protect prepared and cleaned holes from contamination and moisture until adhesive is installed.
6. Re-clean and dry previously prepared holes if, in the opinion of the Engineer, the hole has become contaminated after initial cleaning.

3.04 INSTALLATION OF ADHESIVE AND INSERTS

A. Clean and prepare inserts reinforcing bars and all thread rods:
    1. Prepare embedded length of reinforcing bars and all thread rods by cleaning to bare metal. Inserts shall be free of oil, grease, paint, dirt, mill scale, rust, or other coatings that will reduce bond.
    2. Solvent clean prepared reinforcing bars and all thread rods over the embedment length in accordance with SSPC SP-1. Provide an oil and grease free surface for bonding of adhesive to steel.

B. Fill holes with adhesive:
    1. Starting at the bottom of the hole, fill hole with adhesive inserting the reinforcing bar or all thread rod.
    2. Fill hole as nozzle is withdrawn without creating air voids.
    3. Unless otherwise indicated on the Drawings, fill hole with sufficient adhesive so that excess adhesive is extruded out of the hole when the reinforcing bar or all thread rod is inserted.
    4. Where necessary, seal hole at surface of concrete to prevent loss of adhesive during curing.

C. Installing reinforcing bars and all thread rods.
    1. Unless otherwise indicated on the Drawings, install bars and rods perpendicular to the concrete surface.
    2. Insert reinforcing bars and all thread rods into adhesive in accordance with manufacturer's recommended procedures.
    3. Confirm that insert has reached the designated embedment in the concrete, and that adhesive completely surrounds the embedded portion.
    4. Securely brace bars and all thread rods in place to prevent displacement while the adhesive cures. Bars and rods displaced during curing will be considered damaged and replacement will be required.
    5. Clean excess adhesive from the mouth of the hole.

D. Curing and loading.
   1. Provide and maintain curing conditions recommended by the adhesive manufacturer for the period required to fully cure the adhesive at the temperature of the concrete.
   2. Do not disturb or load bonded embeds until manufacturer's recommended cure time, based on temperature of the concrete, has elapsed.

3.05 POST-INSTALLATION ACTIVITIES

A. Do not bend bars or all-thread rods after bonding to the concrete, unless accepted in advance by the Engineer.

B. Attachments to all thread rods:
   1. After assemblies to be connected are placed, install nuts and washers for threaded rods as indicated on the Drawings.

3.06 FIELD QUALITY CONTROL

A. Provide field quality control over the Work of this Section as specified in Section 01450 - Quality Control.

B. Do not allow work described in this Section to be performed by individuals who do not hold the specified certifications and who have not completed the specified job site training.

C. Manufacturer's services:
   1. Before beginning installation, furnish adhesive manufacturer's technical representative to conduct on-site training in proper storage and handling of adhesive, drilling and cleaning of holes, and preparation and installation of reinforcing bars and all thread rods.
      a. Provide notice of scheduled training to Engineer and to Special Inspector(s) not less than 10 working days before training occurs. Engineer and Special Inspector may attend training sessions.
   2. Submit record, signed by the manufacturer's technical representative, listing Contractor's personnel who completed the training. Only qualified personnel who have completed manufacturer's on-site training shall perform installations.

D. Field inspections and testing:
   1. Hole drilling and preparation.
   2. Results: Submit records of inspections and testing to Engineer by electronic copies within 24 hours after completion.

3.07 FIELD QUALITY ASSURANCE

A. Provide field quality assurance over the Work of this Section as specified in Section 01450 - Quality Control.

B. Special inspections, special tests, and structural observation:
   1. Provide as specified in Section 01455 - Regulatory Quality Assurance.

2. Frequency of inspections:
    a. Unless otherwise indicated on the Drawings or in this Section, provide periodic special inspection as required by the Evaluation Report for the product installed.
    b. Provide continuous inspection for the initial installation of each type and size of adhesive bonded reinforcing bar and all thread rod. Subsequent installations of the same anchor may be installed with periodic inspection as defined in subsequent paragraphs.
3. Preparation:
    a. Review Drawings and Specifications for the Work to be observed.
    b. Review adhesive manufacturer's MPII and recommended installation procedures.
    c. Review Evaluation Report "Conditions of Use" and "Special Inspection" requirements.
4. Inspection: Periodic:
    a. Initial inspection. Provide an initial inspection for each combination of concrete and reinforcing bar strength or concrete strength and all thread rod material being installed. During initial inspection, observe the following for compliance with the installation requirements.
        1) Concrete: Class (minimum specified compressive strength) and thickness.
        2) Environment: Temperature conditions at work area, and moisture conditions of concrete and drilled hole.
        3) Holes: Locations, spacing, and edge distances; verification of drill bit compliance with requirements; cleaning equipment and procedures; cleanliness of hole. Before adhesive is placed, confirm that depth and preparation of holes conforms to the requirements of the Contract Documents, the MPII, and the "conditions of use" listed in the Evaluation Report.
        4) Adhesive: Product manufacturer and name; lot number and expiration date; temperature of product at installation; installation procedure. Note initial set times observed during installation.
        5) Reinforcing bars and all thread rods: Material diameter and length; steel grade and/or strength; cleaning and preparation; cleanliness at insertion; minimum effective embedment provided.
    b. Subsequent inspections: Subsequent installations of the same reinforcing bars or all thread rods may be performed without the presence of the special inspector, provided that:
        1) There is no change in personnel performing the installation, the general strength and characteristics of the concrete receiving the inserts, or the reinforcing bars and all thread rods being used.
        2) For ongoing installations, the special inspector visits the site at least once per day during each day of installation to observe the work for compliance with material requirements and installation procedures.
5. Inspection: Continuous.
    a. Make observations as described under "Inspection - Periodic, Initial Inspection" during all drilling, cleaning, and bonding activities for all bars and rods installed.

6. Records of inspections:
    a. Provide a written record of each inspection using forms acceptable to the Engineer and to the Building Official.
    b. Submit electronic copies of inspection reports to Engineer within 24 hours after completion of inspection.

END OF SECTION

SECTION 03071

EPOXIES

PART 1 GENERAL

1.01 SUMMARY

A. Section includes:
   1. Epoxy.
   2. Epoxy gel.
   3. Epoxy bonding agent.

1.02 REFERENCES

A. ASTM International (ASTM):
   1. C881 - Standard Specification for Epoxy-Resin-Base Systems for Concrete.
   2. C882 - Standard Test Method for Bond Strength of Epoxy-Resin Systems Used with Concrete by Slant Shear.
   3. D638 - Standard Test Method for Tensile Properties of Plastics.
   4. D695 - Standard Test Method for Compressive Properties of Rigid Plastics.

1.03 SUBMITTALS

A. General: Submit as specified in Section 01330 - Submittal Procedures.

B. Product Data: Submit manufacturer's data completely describing epoxy materials:
   1. Submit evidence of conformance to ASTM C881. Include manufacturer’s designations of Type Grade, Class, and Color.
   2. Submit documentation that materials meet or exceed the specified strength and performance characteristics. Indicate test methods and test results.

C. Quality control submittals:
   1. Manufacturer's installation instructions.

PART 2 PRODUCTS

2.01 DESIGN AND PERFORMANCE CRITERIA

A. Performance requirements:
   1. Provide epoxy materials that are new.
   2. Store and use products within limitations set forth by manufacturer.
   3. Perform and conduct work of this Section in neat orderly manner.

2.02 MATERIALS

A. General:
   1. Moisture tolerant, water-insensitive, two-component epoxy resin adhesive material containing 100 percent solids, and meeting or exceeding the performance properties specified when tested in accordance with the standards specified.

B. Epoxy: Low viscosity product in accordance with ASTM C881; Types I, II and IV; Grade 1; Class C, except as modified in this Section.
   1. Manufacturers: One of the following or equal:
      a. Master Builders Solutions, MasterInject 1380.
      b. Dayton Superior, Unitex Pro-Poxy 100.
      c. Sika Corporation, Sikadur 35 Hi-Mod LV.
   2. Required properties:

Table 1 - Material Properties - Epoxy.

Property	Test Method	Required Results ("neat")
Tensile Strength (7-day)	ASTM D638	7,000 pounds per square inch, minimum.
Compressive Yield Strength (7-day)	ASTM D695	10,000 pounds per square inch, minimum.
Bond Strength (harded concrete to harded concrete after2-day cure)	ASTM C882	1,000 pounds per square inch, minimum. Concrete failure before failure of epoxy.
Viscosity (mixed)		250-550 centipoise
Notes: Testing results are for materials installed and cured at a temperature between 72 and 78 degrees Fahrenheit for 7 days, unless otherwise noted.		

C. Epoxy gel: Non-sagging product in accordance with ASTM C881, Types I and IV, Grade 3, Class C.
   1. Manufacturers: One of the following or equal:
      a. Master Builders Solutions, MasterEmaco ADH 327.
      b. Dayton Superior, Sure Anchor J50.
      c. Sika Corp., Sikadur 31, Hi-Mod Gel.

2. Required properties:

Table 2 - Material Properties - Epoxy Gel.		
Property	**Test Method**	**Required Results ("neat")**
Tensile Strength (7-day)	ASTM D638	2,000 pounds per square inch, minimum.
Compressive Yield Strength (7-day)	ASTM D695	8,000 pounds per square inch, minimum.
Bond Strength (14-day)	ASTM C882	1,500 pounds per square inch, minimum.
Notes: Testing results are for materials installed and cured at a temperature between 72 and 78 degrees Fahrenheit for 7 days, unless otherwise noted.		

D. Epoxy bonding agent: Non-sagging product in accordance with ASTM C881, Type II, Grade 2, Class C.
   1. Manufacturers: One of the following or equal:
      a. Master Builders Solutions, MasterEmaco ADH 326.
      b. Dayton Superior, Sure Bond J58.
      c. Sika Chemical Corp., Sikadur 32 Hi-Mod LPL.
   2. Required properties.

Table 3 - Material Properties - Epoxy Bonding Agent		
Property	**Test Method**	**Required Results**
Tensile Strength (7-day)	ASTM D638	3,300 pounds per square inch, minimum.
Compressive Yield Strength (7-day)	ASTM D695	8,300 pounds per square inch, minimum.
Bond Strength (14-days)	ASTM C882	1,800 pounds per square inch, minimum. Concrete failure before failure of epoxy bonding agent.
Pot Life	-	Minimum 60 minutes at 73 degrees Fahrenheit or 30 minutes at 100 degrees Fahrenheit.
Notes: Testing results are for materials installed and cured at a temperature between 72 and 78 degrees Fahrenheit for 7 days, unless otherwise noted.		

PART 3 EXECUTION

3.01 INSTALLATION

A. Install and cure epoxy materials in accordance with manufacturer's installation instructions.

B. Epoxy:
   1. Apply in accordance with manufacturer's installation instructions.

C. Epoxy gel:
   1. Apply in accordance with manufacturer's installation instructions.
   2. Use for vertical or overhead work, or where high viscosity epoxy is required.
   3. Epoxy gel used for vertical or overhead work may be used for horizontal work.

D. Epoxy bonding agent:
   1. Apply in accordance with manufacturer's installation instructions.
   2. Bonding agent will not be required for filling form tie holes or for normal finishing and patching of similar sized small defects.

END OF SECTION

SECTION 03926

STRUCTURAL CONCRETE REPAIR

PART 1 GENERAL

1.01 SUMMARY

A. Section includes: Repairing damaged structural concrete.

1.02 REFERENCES

A. ASTM International (ASTM):
   1. C109 - Standard Test Method for Compressive Strength of Hydraulic Cement Mortars (Using 2-in. or [50-mm] Cube Specimens).
   2. C293 - Standard Test Method for Flexural Strength of Concrete (Using Simple Beam with Center-Point Loading).
   3. C348 - Standard Test Method for Flexural Strength of Hydraulic-Cement Mortars).
   4. C666 - Standard Test Method for Resistance of Concrete to Rapid Freezing and Thawing.
   5. C882 - Standard Test Method for Bond Strength of Epoxy-Resin Systems Used With Concrete By Slant Shear.

1.03 SUBMITTALS

A. Product data: Submit manufacturer's data completely describing structural repair concrete materials.

B. Certificates of Compliance.

C. Manufacturer's Instructions.

1.04 QUALITY ASSURANCE

A. Manufacturer qualifications: The manufacturer of the specified product shall have been in existence, for a minimum of 10 years.

B. Allowable tolerances: Deviation from plumb or level shall not exceed 1/8 inch within 10 feet in any direction, as determined with a 10-foot straight edge.

1.05 DELIVERY, STORAGE, AND HANDLING

A. Deliver the specified product in original, unopened containers with the manufacturer's name, labels, product identification, and batch numbers.

B. Store and condition the specified product as recommended by the manufacturer.

C. Deliver, store, and handle packaged materials in the manufacturer's original, sealed containers, each clearly identified with the manufacturer's name, and name and type of product.

D. Store materials subject to damage by dirt and moisture in a clean, dry location, off the ground, and suitably protected.

1.06 PROJECT CONDITIONS

A. Existing conditions:
   1. Hot weather: ACI 305.
   2. Cold weather: ACI 306.
   3. Do not place concrete repair mortar during precipitation unless adequate protection is provided.

PART 2 PRODUCTS

2.01 DESIGN AND PERFORMANCE CRITERIA

A. General: Structural repair concrete composed of cementitious material capable of being placed in formed vertical and overhead applications, and on horizontal surfaces.

B. Design requirements:
   1. Provide material suitable for performing in environments subject to corrosive attack by chlorides and sulfates, freeze/thaw cycles, low permeability, and abrasion resistant.
   2. Provide concrete repair mortar cement that is placeable from 1 inch in depth and extendable in greater depths.
   3. Concrete repair mortar shall be capable of being poured in place or troweled in place to suit the conditions encountered.

2.02 MATERIALS

A. Structural repair concrete:
   1. Manufacturers: One of the following or equal:
      a. Master Builder Solutions, MasterEmaco S 466CI.
      b. Sika Corp., SikaTop 123 Plus.
   2. Compressive strength: As follows in accordance with ASTM C109:
      a. 1 day: 2,500 pounds per square inch, minimum.
      b. 7 day: 6,000 pounds per square inch, minimum.
      c. 28 day: 7,000 pounds per square inch, minimum.
   3. Bond strength by slant shear: 2,200 pounds per square inch minimum at 28 days, in accordance with ASTM C882 modified.
   4. Flexural strength: 2,000 pounds per square inch minimum at 28 days, when tested in accordance with ASTM .C293, or 770 pounds per square inch minimum at 28 days when tested in accordance with ASTM C348.
   5. Rapid freeze/thaw durability: In accordance with ASTM C666; Procedure A.
      a. Relative durability factor at 300 cycles: 95 percent minimum.
   6. Working time: 30 to 40 minutes.
   7. Color: Concrete gray.

B. Water: Potable, clean, not detrimental to concrete.

C. Form materials:
   1. Smooth finish.
   2. Brace as required to maintain tolerances.

PART 3 EXECUTION

3.01 EXAMINATION

A. Verify that concrete surfaces and exposed reinforcing are clean and free of contaminants.

3.02 PREPARATION

A. Prepare existing concrete by cleaning with steel brush and applying bonding agent in accordance with manufacturer's instructions.

B. Thoroughly clean reinforcement and other embedded items to remove loose rust and other objectionable matter.

C. Thoroughly wet wood forms, except coated plywood, and adjacent concrete at least 1 hour in advance of placing concrete; securely close cleanout end inspection ports; repeat wetting as necessary to keep forms damp.

D. Damaged concrete:
   1. Areas to be repaired shall be clean, sound, and free of contaminants.
      a. Remove loose and deteriorated concrete by mechanical means acceptable to the Engineer.
      b. Saw cut perimeter 1/2-inch maximum.
   2. Chip concrete substrate to obtain a surface profile of 1/16 inch to 1/8 inch in depth with a new fractured aggregate surface.
      a. The area to be repaired shall be not less than 1 inch in depth.
   3. Concrete removal shall extend along the reinforcing steel to locations along the bar free of bond inhibiting corrosion, and where the bar is well bonded to surrounding concrete.

E. Use the following procedures where reinforcing steel with active corrosion is encountered:
   1. Sandblast reinforcing steel to remove contaminants and rust.
   2. Determine section loss, splice new reinforcing steel where there is more than 15 percent loss as directed by the Engineer.
      a. If more than half the diameter of the reinforcing steel is exposed, chip out behind the reinforcing steel a minimum of 1/2 inch. The distance chipped behind the reinforcing steel must also equal or exceed the minimum placement depth of the accepted material.

F. Treat cracks in the substrate at the area of patching or overlay work as directed by the Engineer.

G. Extend existing control and expansion joints through any concrete repair.

H. Apply an epoxy-bonding agent to area to be repaired, as specified in Section 03071 - Epoxies, prior to patching concrete with polymer-modified portland cement mortar.

3.03 MIXING

A. Mix in accordance with manufacturer's mixing instructions.

3.04 INSTALLATION

A. Formed surface finishes:
   1. Smooth finish:
      a. Obtain by the use of plywood, sheet metal, or lined wood forms; no fins, pockmarks, or other irregularities shall be present in the exposed surfaces of concrete.
      b. Place no structural repair concrete without prior authorization of Engineer.

B. Verify that form materials are in place and ready to receive installation of concrete repair material.

C. Install in accordance with manufacturer's installation instructions.

D. In accordance with ACI recommendations, apply concrete repair material only when ambient conditions of moisture, temperature, humidity, and wind are favorable for curing.

E. Scrub mortar into substrate, filling cracks, voids, and pores.

F. For new construction, finish of repaired area shall match required finish for concrete being repaired.

G. For existing concrete, finish of repair area shall match finish of concrete being repaired.

H. During the curing process, protect concrete repair from rain, wind, or freezing as required:
   1. Keep sufficient covering on hand at all times for protection of repair concrete.

3.05 CLEANING

A. Remove debris and excess material. Leave work site in a neat, clean condition.

END OF SECTION

SECTION 05190

MECHANICAL ANCHORING AND FASTENING TO CONCRETE AND MASONRY

PART 1 GENERAL

1.01 SUMMARY

A. Section includes:
   1. Cast-in anchors and fasteners:
      a. Anchor bolts.
      b. Anchor rods.
   2. Post-installed steel anchors and fasteners:
      a. Concrete anchors.
      b. Sleeve anchors.
      c. Screw anchors.
   3. Appurtenances for anchoring and fastening:
      a. Anchor bolt sleeves.
      b. Isolating sleeves and washers.
      c. Thread coating for threaded stainless steel fasteners.

1.02 REFERENCES

A. American Concrete Institute (ACI):
   1. 355.2 - Qualification of Post-Installed Mechanical Anchors in Concrete & Commentary.

B. American National Standards Institute (ANSI):
   1. B212.15 - Cutting Tools - Carbide-tipped Masonry Drills and Blanks for Carbide-tipped Masonry Drills.

C. American Welding Society (AWS):
   1. D1.1 - Structural Welding Code - Steel.
   2. D1.6 - Structural Welding Code - Stainless Steel.

D. ASTM International (ASTM):
   1. A36 - Standard Specification for Carbon Structural Steel.
   2. A53 - Standard Specification for Pipe, Steel, Black and Hot-Dipped, Zinc-Coated, Welded and Seamless.
   3. A108 - Standard Specification for Steel Bars, Carbon and Alloy, Cold Finished.
   4. A123 - Standard Specification for Zinc (Hot-Dip Galvanized) Coatings on Iron and Steel Products.
   5. A153 - Standard Specification for Zinc Coating (Hot-Dip) on Iron and Steel Hardware.
   6. A240 - Standard Specification for Chromium and Chromium Nickel Stainless Steel Plate, Sheet, and Strip for Pressure Vessels and for General Applications.
   7. A380 - Standard Practice for Cleaning, Descaling, and Passivation of Stainless Steel Parts, Equipment, and Systems.

8. A563 - Standard Specification for Carbon and Alloy Steel Nuts.
9. B633 - Standard Specification for *Electrodeposited* Coatings of Zinc on Iron and Steel.
10. B695 - Standard Specification for Coatings of Zinc Mechanically Deposited on Iron and Steel.
11. E488 - Standard Test Methods for Strength of Anchors in Concrete Elements.
12. F436 - Standard Specification for Hardened Steel Washers.
13. F593 - Standard Specification for Stainless Steel Bolts, Hex Cap Screws and Studs.
14. F594 - Standard Specification for Stainless Steel Nuts.
15. F1554 - Standard Specification for Anchor Bolts, Steel, 36, 55 and 105-ksi Yield Strength.
16. F2329 - Standard Specification for Zinc Coating, Hot-Dip, Requirements for Application to Carbon and Alloy Steel Bolts, Screws, Washers, Nuts, and Special Threaded Fasteners.

E. International Code Council Evaluation Service, Inc. (ICC-ES):
1. AC193 - Acceptance Criteria for Mechanical Anchors in Concrete Elements.

1.03 DEFINITIONS

A. Built-in anchor: Headed bolt or assembly installed in position before filling surrounding masonry units with grout.

B. Cast-in anchor: Headed bolt or assembly installed in position before placing plastic concrete around.

C. Overhead installations: Fasteners installed on overhead surfaces where the longitudinal axis of the fastener is more than 60 degrees above a horizontal line so that the fastener resists sustained tension loads.

D. Passivation: Chemical treatment of stainless steel with a mild oxidant for the purpose of enhancing the spontaneous formation of the steel's protective passive film.

E. Post-installed anchor: Fastener or assembly installed in hardened concrete or finished masonry construction, typically by drilling into the structure and inserting a steel anchor assembly.

F. Terms relating to structures or building environments as used with reference to anchors and fasteners:
1. Corrosive locations: Describes interior and exterior locations as follows:
a. Locations used for delivery, storage, transfer, or containment (including spill containment) of chemicals used for plant treatment processes.
b. Exterior and interior locations at the following treatment structures:
1) Wastewater treatment facilities::
a) Headworks and grit facilities.
2. Wet and moist locations: Describes locations, other than "corrosive locations," that are submerged, are immediately above liquid containment structures, or are subject to frequent wetting, splashing, or wash down. Includes:
a. Exterior portions of buildings and structures.

b. Liquid-containing structures:
    1) Locations at and below the maximum operating liquid surface elevation.
    2) Locations above the maximum operating liquid surface elevation and:
        a) Below the top of the walls containing the liquid.
        b) At the inside faces and underside surfaces of a structure enclosing or spanning over the liquid (including walls, roofs, slabs, beams, or walkways enclosing the open top of the structure).
c. Liquid handling equipment:
    1) Bases of pumps and other equipment that handles liquids.
d. Indoor locations exposed to moisture, splashing, or routine wash down during normal operations, including floors with slopes toward drains or gutters.
e. Other locations indicated on the Drawings.

3. Other locations:
    a. Interior dry areas where the surfaces are not exposed to moisture or humidity in excess of typical local environmental conditions.

1.04 SUBMITTALS

A. General:
1. Submit as specified in Section 01330 - Submittal Procedures.
2. Submit information listed for each type of anchor or fastener to be used.

B. Action submittals:
1. Product data:
    a. Cast-in anchors:
        1) Manufacturer's data including catalog cuts showing anchor sizes and configuration, materials, and finishes.
    b. Post-installed anchors:
        1) For each anchor type, manufacturer's data including catalog cuts showing anchor sizes and construction, materials and finishes, and load ratings.
2. Samples:
    a. Samples of each type of anchor, including representative diameters and lengths, if requested by the Engineer.
3. Certificates:
    a. Cast-in anchors:
        1) Mill certificates for steel anchors that will be supplied to the site.
    b. Post-installed anchors:
        1) Manufacturer's statement or certified test reports demonstrating that anchors that will be supplied to the site comply with the materials properties specified.
4. Test reports:
    a. Post-installed anchors: For each anchor type used for the Work:
        1) Current ICC-ES Report (ESR), or equivalent acceptable to the Engineer and the authority having jurisdiction, demonstrating:
            a) Acceptance of that anchor for use under the building code specified in Section 01410 - Regulatory Requirements.

5. Manufacturer's instructions:
    a. Requirements for storage and handling.
    b. Recommended installation procedures including details on drilling, hole size (diameter and depth), hole cleaning and preparation procedures, anchor insertion, and anchor tightening.
    c. Requirements for inspection or observation during installation.
6. Qualification statements:
    a. Post-installed anchors: Installer qualifications:
        1) Submit list of personnel performing installations and include date of manufacturer's training for each.

1.05 QUALITY ASSURANCE

A. Qualifications:
    1. Post installed anchors shall be in accordance with building code specified in Section 01410 - Regulatory Requirements.

B. Special inspection:
    1. Provide special inspection of post-installed anchors as specified in Section 01455 - Regulatory Quality Assurance and this Section.

1.06 DELIVERY, STORAGE, AND HANDLING

A. Deliver post-installed anchors in manufacturer's standard packaging with labels visible and intact. Include manufacturer's installation instructions.

B. Handle and store anchors and fasteners in accordance with manufacturer's recommendations and as required to prevent damage.

C. Protect anchors from weather and moisture until installation.

PART 2 PRODUCTS

2.01 MANUFACTURED UNITS

A. General:
    1. Furnish threaded fasteners with flat washers and hex nuts fabricated from materials corresponding to the material used for threaded portion of the anchor.
        a. Cast-in anchors: Provide flat washers and nuts as listed in the ASTM standard for the anchor materials specified.
        b. Post-installed anchors: Provide flat washers and nuts supplied for that product by the manufacturer of each anchor.
    2. Size of anchors and fasteners, including diameter and length or minimum effective embedment depth: As indicated on the Drawings or as specified in this Section. In the event of conflicts, contact Engineer for clarification.
    3. Where anchors and connections are not specifically indicated on the Drawings or specified, their material, size and form shall be equivalent in quality and workmanship to items specified.

B. Materials:
   1. Provide and install anchors of materials as in this Section.

2.02 CAST-IN ANCHORS AND FASTENERS

A. Anchor bolts:
   1. Description:
      a. Straight steel rod having one end with an integrally forged head, and one threaded end. Embedded into concrete with the headed end cast into concrete at the effective embedment depth indicated on the Drawings or specified, and with the threaded end left to project clear of concrete face as required for the connection to be made.
      b. Furnish anchor bolts with heavy hex forged head or equivalent acceptable to Engineer.
         1) Rods or bars with angle bend for embedment in concrete (i.e., “L” or “J” shaped anchor bolts) are not permitted in the Work.
   2. Materials:
      a. Ship anchor bolts with properly fitting nuts attached.
      b. Type 316 stainless steel:
         1) Surfaces descaled, pickled, and passivated in accordance with ASTM A380.
         2) Bolts: ASTM F593, Group 2, Condition CW, coarse threads.
         3) Nuts: ASTM F594. Match alloy (group and UNS designation) and threads of bolts.
         4) Washers: Type 316 stainless steel.

B. Anchor rods:
   1. Description: Straight steel rod having threads on each end or continuously threaded from end to end. One threaded end is fitted with nuts or plates and embedded in concrete to the effective depth indicated on the Drawings, leaving the opposite threaded end to project clear of the concrete face as required for the connection to be made at that location.
   2. Materials:
      a. Stainless steel: Type 316:
         1) Surfaces descaled, pickled, and passivated in accordance with ASTM A380.
         2) Rod: ASTM F593, Group 2, Condition CW, coarse threads.
         3) Nuts: ASTM F594. Match alloy (group and UNS designation) and threads of rods.
         4) Washers: Type 316 stainless steel.
         5) Plates (embedded): ASTM A240.

2.03 POST-INSTALLED ANCHORS AND FASTENERS - ADHESIVE

A. Epoxy bonding of reinforcing bars, all thread rods, and threaded inserts in concrete: As specified in Section 03055 - Adhesive-Bonded Reinforcing Bars and All Thread Rods in Concrete.

2.04 POST-INSTALLED ANCHORS AND FASTENERS - MECHANICAL

A. General:
   1. Post-installed anchors used for the Work shall hold a current ICC Evaluation Service Report demonstrating acceptance for use under the building code specified in Section 01410 - Regulatory Requirements. Reports prepared by other recognized evaluation agencies may be submitted for consideration if acceptable to the Engineer and to the authority having jurisdiction.
      a. Conditions of use: The acceptance report shall indicate acceptance of the product for use under the following conditions:
         1) In regions of concrete where cracking has occurred or may occur.
         2) To resist short-term loads due to wind forces.
         3) To resist short-term loading due to seismic forces for the Seismic Design Category of the structure where the product will be used.
   2. Substitutions: When requesting product substitutions, submit calculations, indicating the diameter, effective embedment depth and spacing of the proposed anchors, and demonstrating that the substituted product will provide load resistance that is equal to or greater than that provided by the anchors listed in this Section.
      a. Calculations shall be prepared by and shall bear the signature and seal of a Civil or Structural Engineer licensed in the State of Florida.
      b. Decisions regarding the acceptability of proposed substitutions shall be at the discretion of the Engineer.

B. Concrete anchors:
   1. Description. Post-installed anchor assembly consisting of a threaded stud and a surrounding wedge expansion sleeve that is forced outward by torquing the center stud to transfer loads from the stud to the concrete through bearing, friction, or both. (Sometimes referred to as “expansion anchors” or “wedge anchors.”)
      a. Do not use slug-in, lead cinch, and similar systems relying on deformation of lead alloy or similar materials to develop holding power.
   2. Concrete anchors for anchorage to concrete:
      a. Acceptance criteria:
         1) Concrete anchors shall have a current ICC-ES Report demonstrating that the anchors have been tested and qualified for performance in both cracked and un-cracked concrete, and for short-term loading due to wind and seismic forces for Seismic Design Categories A through F in accordance with ACI 355.2 and with ICC-ES AC193 (including all mandatory tests and optional tests for seismic tension and shear in cracked concrete).
         2) Concrete anchor performance in the current ICC-ES Report shall be “Category 1” as defined in ACI 355.2.
      b. Manufacturers: One of the following or equal:
         1) Hilti, Kwik Bolt TZ Expansion Anchor.
         2) DEWALT/Powers, PowerStud.
         3) Simpson Strong-Tie, Strong Bolt 2 Wedge Anchor.
      c. Materials. Integrally threaded stud, wedge, washer, and nut:
         1) Stainless steel: Type 316.
         2) Galvanized: Carbon steel, zinc plated in accordance with ASTM B633, minimum 5 microns (Fe/Zn 5).

C. Flush shells:
   1. Description: Post-installed anchor assembly consisting of an internally threaded mandrel that is forced into a pre-drilled concrete hole with a setting tool until the top of the anchor is flush with the face of the concrete. Once installed, a removable threaded bolt is installed in the mandrel.
   2. Flush shell anchors are not permitted in the Work.

D. Sleeve anchors:
   1. Description: Post-installed, torque-controlled anchor assembly consisting of an externally threaded stud with a spacer sleeve near the surface of the base material, and an expansion sleeve on the lower part of the stud. The expansion sleeve is forced outward by torquing of the center stud to transfer load.
      a. Do not use slug-in, lead cinch, and similar systems relying on deformation of lead alloy or similar materials in order to develop holding power.
   2. Sleeve anchors for anchorage to concrete:
      a. Acceptance criteria:
         1) Sleeve anchors shall have a current ICC-ES Report demonstrating that the anchors have been tested and qualified for performance in both cracked and un-cracked concrete, and for short-term loading due to wind and seismic forces for Seismic Design Categories A through F in accordance with ACI 355.2 and with ICC-ES AC193.
         2) Sleeve anchor performance in the current ICC-ES Report shall be “Category 1” as defined in ACI 355.2.
      b. Manufacturers: One of the following or equal:
         1) Hilti, HSL-3 Heavy Duty Expansion (sleeve) Anchor.
         2) DEWALT/Powers, Power Bolt+ Heavy Duty Sleeve Anchor.
      c. Materials:
         1) Stainless steel: Not available.
         2) Galvanized steel: Carbon steel, zinc plated in accordance with ASTM B633, minimum 5 microns (Fe/Zn 5).

E. Screw anchors:
   1. Description: Post-installed concrete anchor that develops tensile strength from mechanical interlock provided by creating a helical “key” that is larger than the diameter of the bolt itself along the length of the anchor shaft.
   2. Screw anchors for anchorage to concrete:
      a. Acceptance criteria:
         1) Screw anchors shall have a current ICC-ES Report demonstrating that the anchors have been tested and qualified for performance in both cracked and un-cracked concrete, and for short-term loading due to wind and seismic forces for Seismic Design Categories A through F in accordance with ACI 355.2 and ICC ES AC193.
         2) Screw anchor performance in the current ICC-ES Report shall be “Category 1” as defined in ACI 355.2.
      b. Manufacturers: Screw anchor: One of the following or equal:
         1) Hilti, Hex head, HUS-EZ Screw Anchor:
            a) With internally threaded head: HUS-EZ I Hanger Anchor.
         2) DEWALT/Powers, Screwbolt+ Screw Anchor:
            a) With internally threaded head: Vertigo+ Rod Hanging System.

3) Simpson Strong-Tie, Titen® HD Screw Anchor:
a) With internally threaded head: Titen® HD Rod Hanger.

c. Materials:
1) Stainless steel: Not available.
2) Galvanized steel: Carbon steel, zinc plated in accordance with ASTM B633, minimum 5 microns (Fe/Zn 5) or equal.

2.05 APPURTENANCES FOR ANCHORING AND FASTENING

A. Anchor bolt sleeves:
1. Having inside diameter approximately 2 inches greater than bolt diameter and minimum 10-bolt diameters long.
2. Plastic sleeves:
a. High-density polyethylene, corrugated sleeve, threaded to provide adjustment of location on the anchor bolt.
b. Manufacturers: The following or equal:
1) Portland Bolt & Manufacturing Co.
3. Fabricated steel sleeves: Construct as specified in Section 05500 - Metal Fabrications:
a. At galvanized carbon steel anchor bolts, provide galvanized carbon steel sleeves.
b. At stainless steel anchor bolts, provide stainless steel sleeves of same Type (304 or 316) as bolt, except that sleeves shall be constructed from low carbon stainless steel for welding (Type 304L or 316L).

B. Isolating sleeves and washers:
1. Manufacturers: One of the following or equal:
a. Central Plastics Co.
b. Allied Corrosion Industries.
2. Sleeves: Mylar, 1/32-inch thick, 4,000 volts per mil dielectric strength, of proper size to fit bolts and extending half way into both steel washers.
3. One sleeve required for each bolt.
4. Washers: The inside diameter of all washers shall fit over the isolating sleeve, and both the steel and isolating washers shall have the same inside diameter and outside diameter.
a. Proper size to fit bolts.
b. Two 1/8-inch thick steel washers for each bolt.
c. G3 Phenolic: 2 insulating washers are required for each bolt:
1) Thickness: 1/8 inch.
2) Base material: Glass.
3) Resin: Phenolic.
4) Water absorption: 2 percent.
5) Hardness (Rockwell): 100.
6) Dielectric strength: 450 volts per mil.
7) Compression strength: 50,000 pounds per square inch.
8) Tensile strength: 20,000 pounds per square inch.
9) Maximum operating temperature: 350 degrees Fahrenheit.

C. Coating for repair of galvanized surfaces:
1. Manufacturers: The following or equal:
a. Jelt, Galvinox.

D. Thread coating: For use with threaded stainless steel fasteners:
   1. Manufacturers: One of the following or equal:
      a. Bostik, Never-Seez.
      b. Oil Research, Inc., WLR No. 111.

PART 3 EXECUTION

3.01 EXAMINATION

A. Examine Work in place to verify that it is satisfactory to receive the Work of this Section. If unsatisfactory conditions exist, do not begin this Work until such conditions have been corrected.

3.02 INSTALLATION: GENERAL

A. Where anchors and fasteners are not specifically indicated on the Drawings or specified, make attachments with materials specified in this Section.

B. Substitution of anchor types:
   1. Post-installed anchors may not be used as an alternative to cast-in/built-in anchors at locations where the latter are indicated on the Drawings.
   2. Cast-in/built-in anchors may be used as an alternative to post-installed mechanical anchors at locations where the latter are indicated on the Drawings.

C. Protect products from damage during installation. Take special care to protect threads and threaded ends.

D. Accurately locate and position anchors and fasteners:
   1. Unless otherwise indicated on the Drawings, install anchors perpendicular to the surfaces from which they project.
   2. Install anchors so that at least 2 threads, but not more than 1/2 inch of threaded rod, projects past the top nut.

E. Interface with other products:
   1. Where steel anchors come in contact with dissimilar metals (aluminum, stainless steel, etc.), use stainless steel anchors and separate or isolate dissimilar metals using isolating sleeves and washers.
   2. Prior to installing nuts, coat threads of stainless steel fasteners with thread coating to prevent galling of threads.

3.03 INSTALLATION: CAST-IN ANCHORS

A. General:
   1. Accurately locate cast-in and built-in anchors.
      a. Provide anchor setting templates to locate anchor bolts and anchor rods. Secure templates to formwork.
      b. Brace or tie off embedments as necessary to prevent displacement during placement of plastic concrete or of surrounding masonry construction.

c. Position and tie cast-in and built-in anchors in place before beginning placement of concrete or grout. Do not “stab” anchors into plastic concrete, mortar, or grout.
d. Do not allow cast-in anchors to touch reinforcing steel. Where cast-in anchors are within 1/4 inch of reinforcing steel, isolate the metals by wrapping the anchors with a minimum of 4 wraps of 10-mil polyvinyl chloride tape in area adjacent to reinforcing steel.

2. For anchoring at machinery bases subject to vibration, use 2 nuts, with 1 serving as a locknut.
3. Where anchor bolts or anchor rods are indicated on the Drawings as being for future use, thoroughly coat exposed surfaces that project from concrete or masonry with non-oxidizing wax. Turn nuts down full length of the threads, and neatly wrap the exposed thread and nut with a minimum of 4 wraps of 10-mil waterproof polyvinyl tape.

B. Anchor bolts:
1. Minimum effective embedment: 10-bolt diameters, unless a longer embedment is indicated on the Drawings.
2. Where indicated on the Drawings, set anchor bolts in plastic, galvanized steel or stainless steel sleeves to allow for adjustment. Fill sleeves with grout when a machine or other equipment is grouted in place.

C. Anchor rods:
1. Install as specified for anchor bolts.

3.04 INSTALLATION: POST-INSTALLED ADHESIVE ANCHORS

A. Epoxy and acrylic adhesive bonding of reinforcing bars, all thread rods, and internally threaded inserts in concrete: As specified in Section 03055 - Adhesive-Bonded Reinforcing Bars and All Thread Rods in Concrete.

3.05 INSTALLATION: POST-INSTALLED MECHANICAL ANCHORS

A. General:
1. Install anchors in accordance with the manufacturer’s instructions, ACI 355.2, the anchor’s ICC-ES Report. Where conflict exists between the ICC-ES Report and the requirements in this Section, the requirements of the ICC-ES Report shall control.
2. Where anchor manufacturer recommends the use of special tools and/or specific drill bits for installation, provide and use such tools.
3. After anchors have been positioned and inserted into concrete or masonry, do not:
a. Remove and reuse/reinstall anchors.
b. Loosen or remove bolts or studs.

B. Holes drilled into concrete and masonry:
1. Do not drill holes in concrete or masonry until the material has achieved its minimum specified compression strength (f’c or f’m).

2. Accurately locate holes:
    a. Before drilling holes, use a reinforcing bar locator to identify the position of all reinforcing steel, conduit, and other embedded items within a 6-inch radius of each proposed hole.
    b. If the hole depth exceeds the range of detection for the rebar locator, the Engineer may require radiographs of the area designated for investigation before drilling commences.
3. Exercise care to avoid damaging existing reinforcement and other items embedded in concrete and masonry.
    a. If embedments are encountered during drilling, immediately stop work and notify the Engineer. Await Engineer's instructions before proceeding.
4. Unless otherwise indicated on the Drawings, drill holes perpendicular to the concrete surface into which they are placed.
5. Drill using anchor manufacturer's recommended equipment and procedures:
    a. Unless otherwise recommended by the manufacturer, drill in accordance with the following:
        1) Drilling equipment: Electric or pneumatic rotary type with light or medium impact. Where edge distances are less than 2 inches, use lighter impact equipment to prevent micro-cracking and concrete spalling during drilling process.
        2) Drill bits: Carbide-tipped in accordance with ANSI B212-15. Hollow drills with flushing air systems are preferred.
6. Drill holes at manufacturer's recommended diameter and to depth required to provide the effective embedment indicated.
7. Clean and prepare holes as recommended by the manufacturer and as required by the ICC-ES Report for that anchor.
    a. Unless otherwise recommended by anchor manufacturer, remove dust and debris using brushes and clean compressed air.
    b. Repeat cleaning process as required by the manufacturer's installation instructions.
    c. When cleaning holes for stainless steel anchors, use only stainless steel or non-metallic brushes.

C. Insert and tighten (or torque) anchors in full compliance with the manufacturer's installation instructions.
    1. Once anchor is tightened (torque), do not attempt to loosen or remove its bolt or stud.

D. Concrete anchors: Minimum effective embedment lengths unless otherwise indicated on the Drawings:

Concrete Anchors			
Nominal Diameter	**Minimum Effective Embedment Length**		**Minimum Member Thickness**
	In Concrete	**In Grouted Masonry**	
3/8 inch	2-1/2 inch	2-5/8 inch	8 inch
1/2 inch	3-1/2 inch	3-1/2 inch	8 inch
5/8 inch	4-1/2 inch	4-1/2 inch	10 inch
3/4 inch	5 inch	5-1/4 inch	12 inch

E. Flush shell anchors:
   1. Flush shell anchors are not permitted in the Work.
   2. If equipment manufacturer's installation instructions recommend the use of flush shell anchors, contact Engineer for instructions before proceeding.

F. Sleeve anchors:
   1. Minimum effective embedment lengths unless otherwise indicated on the Drawings:

Sleeve Anchors			
	Minimum Effective Embedment Length		Minimum Member Thickness
Nominal Diameter	In Concrete	In Grouted Masonry	
M8 (1/2 inch)	70 mm (2-3/4 inch)	Not accepted	100 mm (8 inch)
M10 (5/8 inch)	76 mm (3 inch)	Not accepted	250 mm (10 inch)
M12 (3/4 inch)	80 mm (3-1/4 inch)	Not accepted	300 mm (12 inch)

   2. Install with the sleeve fully engaged in the base material.

G. Screw anchors:
   1. Minimum effective embedment lengths unless otherwise indicated on the Drawings:

Screw Anchors			
	Minimum Effective Embedment Length		Minimum Member Thickness
Nominal Diameter	In Concrete	In Grouted Masonry	
3/8 inch	2-1/2 inch	3-1/4 inch	8 inch
1/2 inch	3-1/4 inch	4-1/2 inch	8 inch
5/8 inch	4 inch	5 inch	10 inch
3/4 inch	5-1/2 inch	6-1/4 inch	12 inch

   1. Install screw anchors using equipment and methods recommended by the manufacturer. Continue driving into hole until the washer head is flush against the item being fastened.

3.06 FIELD QUALITY CONTROL

A. Contractor shall provide quality control over the Work of this Section as specified in Section 01450 - Quality Control.
   1. Expenses associated with work described by the following paragraphs shall be paid by the Contractor.

B. Post-installed anchors:
   1. Review anchor manufacturer's installation instructions and requirements of the Evaluation Service Report (hereafter referred to as "installation documents") for each anchor type and material.
   2. Observe hole-drilling and cleaning operations for conformance with the installation documents.
   3. Certify in writing to the Engineer that the depth and location of anchor holes, and the torque applied for setting the anchors conforms to the requirements of the installation documents.

3.07 FIELD QUALITY ASSURANCE

A. Owner will provide on-site observation and field quality assurance for the Work of this Section.
   1. Expenses associated with work described by the following paragraphs shall be paid by the Owner.

B. Field inspections and special inspections:
   1. Required inspections: Observe construction for conformance to the approved Contract Documents, the accepted submittals, and manufacturer's installation instructions for the products used.
   2. Record of inspections:
      a. Maintain record of each inspection.
      b. Submit copies to Engineer upon request.
   3. Statement of special inspections: At the end of the project, prepare and submit to the Engineer and the authority having jurisdiction inspector's statement that the Work was constructed in general conformance with the approved Contract Documents, and that deficiencies observed during construction were resolved.

C. Special inspections: Anchors cast into concrete and built into masonry.
   1. Provide special inspection during positioning of anchors and placement of concrete or masonry (including mortar and grout) around the following anchors:
      a. Anchor bolts.
      b. Anchor rods.
   2. During placement, provide continuous special inspection at each anchor location to verify that the following elements of the installation conform to the requirements of the Contract Documents.
      a. Anchor:
         1) Type and dimensions.
         2) Material: Galvanized steel, Type 304 stainless steel, or Type 316 stainless steel as specified in this Section or indicated on the Drawings.
         3) Positioning: Spacing, edge distances, effective embedment, and projection beyond the surface of the construction.
         4) Reinforcement at anchor: Presence, positioning, and size of additional reinforcement at anchors indicated on the Drawings.

3. Following hardening and curing of the concrete or masonry surrounding the anchors, provide periodic special inspection to observe and confirm the following:
    a. Base material (concrete or grouted masonry):
        1) Solid and dense concrete or grouted masonry material within required distances surrounding anchor.
        2) Material encapsulating embedment is dense and well-consolidated.

D. Special Inspections: Post-installed mechanical anchors placed in hardened concrete and in grouted masonry.
    1. Provide special inspection during installation of the following anchors:
        a. Concrete anchors.
        b. Sleeve anchors.
        c. Screw anchors.
    2. Unless otherwise noted, provide periodic special inspection during positioning, drilling, placing, and torquing of anchors.
        a. Provide continuous special inspection for post-installed anchors in “overhead installations” as defined in this Section.
    3. Requirements for periodic special inspection:
        a. Verify items listed in the following paragraphs for conformance to the requirements of the Contract Documents and the Evaluation Report for the anchor being used. Observe the initial installation of each type and size of anchor, and subsequent installation of the same anchor at intervals of not more than 4 hours.
            1) Any change in the anchors used, in the personnel performing the installation, or in procedures used to install a given type of anchor shall require a new “initial inspection.”
        b. Substrate: Concrete or masonry surfaces receiving the anchor are sound and of a condition that will develop the anchor’s rated strength.
        c. Anchor:
            1) Manufacturer, type, and dimensions (diameter and length).
            2) Material (galvanized, Type 304 stainless steel, or Type 316 stainless steel).
        d. Hole:
            1) Positioning: Spacing and edge distances.
            2) Drill bit type and diameter.
            3) Diameter, and depth.
            4) Hole cleaned in accordance with manufacturer’s required procedures. Confirm multiple repetitions of cleaning when recommended by the manufacturer.
            5) Anchor’s minimum effective embedment.
            6) Anchor tightening/installation torque.
    4. Requirements for continuous special inspection:
        a. The special inspector shall observe all aspects of anchor installation, except that holes may be drilled in his/her absence provided that he/she confirms the use of acceptable drill bits before drilling, and later confirms the diameter, depth, and cleaning of drilled holes.

E. Field tests:
   1. Owner may, at any time, request testing to confirm that materials being delivered and installed conform to the requirements of the Specifications.
      a. If such additional testing shows that the materials do not conform to the specified requirements, the Contractor shall pay the costs of these tests.
      b. If such additional testing shows that the materials do conform to the specified requirements, the Owner shall pay the costs of these tests.

3.08 NON-CONFORMING WORK

A. Remove misaligned or non-performing anchors.

B. Fill empty anchor holes and repair failed anchor locations using high-strength, non-shrink, non-metallic grout.

3.09 SCHEDULES

A. Provide and install anchor materials as scheduled in the following Table.

Table - Required Anchoring Materials by Location

Location/Exposure		Materials	Notes
1.	**Anchors into concrete and grouted masonry for attachment of carbon steel, including structural steel and other steel fabrications:**		
a)	Interior dry areas	Carbon steel - galvanized	
b)	Locations with galvanized steel structures or fabrications	Stainless steel - Type 304 or 316	1
c)	Exterior and interior wet and moist locations	Stainless steel - Type 316	1
d)	Corrosive locations	Stainless steel - Type 316	1
2.	**Anchors into concrete and grouted masonry for attachment of aluminum, stainless steel, or fiber-reinforced plastic (FRP) shapes and fabrications:**		
a)	Interior dry areas	Stainless steel - Type 304 or 316	1
b)	Exterior and interior wet and moist locations	Stainless steel - Type 316	1
c)	Corrosive locations	Stainless steel - Type 316	1
3.	**Anchors for attaching equipment and its appurtenances:**		
a)	All locations	Stainless steel - Type 316 (unless Type 304 is specifically indicated in the specifications for the equipment.)	1

Notes:
(1) Where anchors are in contact with a metal that differs from that of the anchor, provide isolation sleeves and washers.

END OF SECTION

SECTION 05500

METAL FABRICATIONS

PART 1 GENERAL

1.01 SUMMARY

A. Section includes:
   1. Handrails and guardrails.
   2. Metal tread plate.
   3. Preformed channel pipe supports.
   4. Miscellaneous metals.
   5. Associated accessories to the above items.

1.02 REFERENCES

A. Aluminum Association (AA):
   1. DAF-45: Designations from Start to Finish.
      a. M12-C22-A41.

B. American Association of State Highway and Transportation Officials (AASHTO):
   1. Standard Specifications for Highway Bridges.

C. ASTM International (ASTM):
   1. A36 - Standard Specification for Carbon Structural Steel.
   2. A48 - Standard Specification for Gray Iron Castings.
   3. A53 - Standard Specification for Pipe, Steel, Black and Hot-Dipped, Zinc-Coated, Welded, and Seamless.
   4. A123 - Standard Specification for Zinc (Hot-Dip Galvanized) Coatings on Iron and Steel Products.
   5. A240 - Standard Specification for Chromium and Chromium-Nickel Stainless Steel Plate, Sheet, and Strip for Pressure Vessels for General Applications.
   6. A276 - Standard Specification for Stainless Steel Bars and Shapes.
   7. A307 - Standard Specification for Carbon Steel Bolts and Studs, 60,000 PSI Tensile Strength.
   8. A380 - Standard Practice for Cleaning, Descaling, and Passivation of Stainless Steel Parts, Equipment, and Systems.
   9. A489 - Standard Specification for Carbon Steel Lifting Eyes.
   10. A500 - Standard Specification for Cold-Formed Welded and Seamless Carbon Steel Structural Tubing in Rounds and Shapes.
   11. A501 - Standard Specification for Hot-Formed Welded and Seamless Carbon Steel Structural Tubing.
   12. A635 - Standard Specification for Steel, Sheet and Strip, Heavy-Thickness Coils, Hot-Rolled, Alloy, Carbon, Structural, High-Strength Low-Alloy, and High-Strength Low-Alloy with Improved Formability, General Requirements for.
   13. A653 - Standard Specification for Steel Sheet, Zinc-Coated (Galvanized) or Zinc-Iron Alloy-Coated (Galvannealed) by the Hot-Dip Process.
   14. A992 - Standard Specification for Structural Steel Shapes.

15. B209 - Standard Specification for Aluminum and Aluminum-Alloy Sheet and Plate.
16. B221 - Standard Specification for Aluminum and Aluminum-Alloy Extruded Bars, Rods, Wire, Profiles, and Tubes.
17. B308 - Standard Specification for Aluminum-Alloy 6061-T6 Standard Structural Profiles.
18. B429 - Standard Specification for Aluminum-Alloy Extruded Structural Pipe and Tube.
19. F593 - Standard Specification for Stainless Steel Bolts, Hex Cap Screws and Studs.
20. F3125 - Standard Specification for High Strength Structural Bolts, Steel and Alloy Steel, Heat Treated, 120 ksi and 150 ksi Minimum Tensile Strength.

D. American Welding Society (AWS):
1. A2.4 - Standard Symbols for Welding, Brazing, and Nondestructive Examination.

E. National Association of Architectural Metal Manufacturers (NAAMM):
1. Metal Finishes Manual.

F. Occupational Safety and Health Administration (OSHA).

1.03 DEFINITIONS

A. Passivation: Removal of exogenous iron or iron compounds from the surface of a stainless steel by means of chemical dissolution resulting from treatment with an acid solution that removes the surface contamination but does not significantly affect the stainless steel itself.

1.04 SUBMITTALS

A. Product Data:
1. Handrails and guardrails.

B. Shop drawings:
1. Handrails and guardrails:
    a. Including details on connection attachments, gates, kick plates, ladders, and angles.
    b. Indicate profiles, sizes, connection attachments, reinforcing, anchorage, size and type of fasteners, and accessories.
    c. Include erection drawings, elevations, and details where applicable.
    d. Indicate welded connections using standard AWS A2.4 welding symbols. Indicate net weld lengths.
2. Metal tread plate.
3. Miscellaneous metals.

C. Samples:
1. Guardrails with specified finishes.

D. Quality control submittals:
   1. Design data.
   2. Test reports:
      a. Guardrails: 3 copies of certified tests performed by an independent testing laboratory certifying that guardrails meet current State and OSHA strength requirements.
      b. Gratings:
         1) Grating manufacturers' calculations showing that gratings will meet specified design load, stress, and deflection requirements for each size grating for each span.
         2) Reports of tests performed.

PART 2 PRODUCTS

2.01 MATERIALS

A. General: Unless otherwise specified or indicated on the Drawings, structural and miscellaneous metals in accordance with the standards of the ASTM, including the following:

Item	ASTM Standard No.	Class, Grade Type or Alloy No.
Cast Iron		
Cast Iron	A48	Class 40B
Steel		
Galvanized sheet iron or steel	A653	Coating G90
Coil (plate)	A635	--
Structural plate, bars, rolled shapes, and miscellaneous items (except W shapes).	A36	--
Rolled W shapes	A992	Grade 50
Standard bolts, nuts, and washers	A307	--
High strength bolts, nuts, and hardened flat washers	F3125, Grade A325	--
Eyebolts	A489	Type 1
Tubing, cold-formed	A500	--
Tubing, hot-formed	A501	--
Steel pipe	A53	Grade B
Stainless Steel		
Plate, sheet, and strip	A240	Type 304* or 316**
Bars and shapes	A276	Type 304* or 316**
Bolts (Type 304)	F593	Group 1 Condition CW
Bolts (Type 316)	F593	Group 2 Condition CW

Item	ASTM Standard No.	Class, Grade Type or Alloy No.
Aluminum		
Flashing sheet aluminum	B209	Alloy 5005-H14, 0.032 inch minimum thickness
Structural sheet aluminum-	B209	Alloy 6061-T6
Structural aluminum	B209 B308	Alloy 6061-T6
Extruded aluminum	B221	Alloy 6063-T42
* Use Type 304L if material will be welded. ** Use Type 316L if material will be welded.		

1. Stainless steels are designated by type or series defined by ASTM.
2. Where stainless steel is welded, use low-carbon stainless steel.

2.02 MANUFACTURED UNITS

A. Concrete inserts:
   1. Concrete inserts for supporting pipe and other applications are specified in Section 15061 - Pipe Supports.

B. Handrails and guardrails:
   1. General:
      a. Design and fabricate assemblies to conform to current local, State, and OSHA standards and requirements.
      b. Coordinate layout of assemblies and post spacings to avoid conflicts with equipment and equipment operators:
         1) Indicate on the shop drawings locations of such equipment.
         2) Highlight locations where railings cannot be made continuous, and obtain Engineer's directions on how to proceed before fabricating or installing railings.
   2. Aluminum handrails and guardrails (nonwelded pipe):
      a. Rails, posts, and fitting-assembly spacers:
         1) In accordance with ASTM B429, 6005, 6063 or 6105, minimum Schedule 40, extruded aluminum pipe of minimum 1.89-inch outside diameter and 0.14-inch wall thickness.
      b. Kick plates: 6061 or 6105 aluminum alloy.
      c. Fastenings and fasteners: As recommended or furnished by the manufacturer.
      d. Other parts: 6063 extruded aluminum, or F214 or F514.0 aluminum castings:
         1) Fabrications: In accordance with ASTM B209 or ASTM B221 extruded bars:
            a) Bases: 6061 or 6063 extruded aluminum alloy.
         2) Plug screws or blind rivets: Type 305 stainless steel.
            a) Other parts: Type 300 series stainless steel.
      e. Finish of aluminum components:
         1) Anodized finish, 0.7 mil thick, applied to exposed surfaces after cutting. Aluminum Association Specification M12-C22-A41,

mechanical finish non specular as fabricated, chemical finish-medium matte, anodic coating-clear Class I Architectural.
2) Pretreat aluminum for cleaning and removing markings before anodizing.

f. Fabrication and assembly:
1) Fabricate posts in single, unspliced pipe length.
2) Perform without welding.
3) Do not epoxy bond the parts.
4) Maximum clear opening between assembled railing components as indicated on the Drawings.

g. Manufacturers: One of the following or equal:
1) Moultrie Manufacturing Co., Wesrail.
2) Golden Railings, Riveted System.
3) Craneveyor Corp. Enerco Metals, C-V Rail.

3. Fastenings and fasteners: As recommended or furnished by guardrail manufacturer for use with this system.

C. Metal tread plate:
1. Plate having a raised figured pattern on 1 surface to provide improved traction.

D. Preformed channel pipe supports:
1. Preformed channel pipe supports for pipe supports and other applications shall be provided if necessary and be type 316 stainless steel.

E. Miscellaneous aluminum:
1. Fabricate aluminum products, not covered separately in this Section, in accordance with the best practices of the trade and field assemble by riveting or bolting.
2. Do not weld or flame cut.

F. Miscellaneous cast iron:
1. General:
a. Tough, gray iron, free from cracks, holes, swells, and cold shuts.
b. Quality such that hammer blow will produce indentation on rectangular edge of casting without flaking metal.
c. Before leaving the foundry, clean castings and apply 16-mil dry film thickness coating of coal-tar epoxy, unless otherwise specified or indicated on the Drawings.

G. Miscellaneous stainless steel:
1. Provide miscellaneous stainless steel items not specified in this Section as indicated on the Drawings or specified elsewhere.
a. Fabricate and install in accordance with the best practices of the trade.
2. Cleaning and passivation:
a. Following shop fabrication of stainless steel members, clean and passivate fabrications.
b. Finish requirements: Remove free iron, heat tint oxides, weld scale and other impurities, and obtain a passive finished surface.

c. Provide quality control testing to verify effectiveness of cleaning agents and procedures and to confirm that finished surfaces are clean and passivated.
    1) Conduct sample runs using test specimens with proposed cleaning agents and procedures as required to avoid adverse effects on surface finishes and base materials.
d. Pre-clean, chemically descale (pickle), and final clean fabrications in accordance with the requirements of ASTM A380 to remove deposited contaminants before shipping.
    1) Passivation by citric acid treatment is not allowed.
        a) If degreasing is required before cleaning to remove scale or iron oxide, cleaning (pickling) treatments with citric acid are permissible; however, these treatments shall be followed by inorganic cleaners such as nitric-hydrofluoric acid.
    2) Provide acid descaling (pickling) in accordance with Table A1.1 of Annex A1 of ASTM A380.
    3) After pickling, final cleaning of stainless steel shall conform to Part II of Table A2.1 of Annex A2 of ASTM A380.
e. After cleaning, inspect using methods specified for “gross inspection” in ASTM A380.
f. Improperly or poorly cleaned and passivated materials shall not be shipped and will not be accepted at the job site.

H. Miscellaneous structural steel:
1. Provide miscellaneous steel items not specified in this Section as indicated on the Drawings or specified elsewhere.
    a. Fabricate and install in accordance with the best practices of the trade.

I. Isolating sleeves and washers:
1. As indicated on the Drawings and as specified in Section 05190 - Mechanical Anchoring and Fastening to Concrete and Masonry.

PART 3 EXECUTION

3.01 EXAMINATION

A. Verification of conditions:
1. Examine work in place to verify that it is satisfactory to receive the work of this Section.
2. If unsatisfactory conditions exist, do not begin this work until such conditions have been corrected.

3.02 INSTALLATION

A. General:
1. Install products as indicated on the Drawings, and in accordance with shop drawings and manufacturer's printed instructions, as applicable except where specified otherwise.

2. Interface between materials:
    a. Dissimilar metals: Where steel comes in contact with dissimilar metals (aluminum, stainless steel, etc.), separate or isolate the dissimilar metals.
        1) Make application so that the isolating or protective barrier is not visible in the completed construction.
        2) Isolating sleeves and washers: As specified in Section 05190 - Mechanical Anchoring and Fastening to Concrete and Masonry.
    b. Aluminum in contact with concrete or masonry: Coat aluminum surfaces as specified in Section 09960 - High Performance Coatings.
    c. Aluminum in contact with concrete or masonry.

B. Handrails and guardrails:
1. General:
    a. Fasten pipe rails to fittings with Series 300 stainless steel pop rivets or flush set screws.
    b. Make pipe cuts clean and straight, free of burrs and nicks, and square and accurate for minimum joint-gap.
    c. Drill and countersink holes to proper size, as required for a tight flush fit of screws and other component parts.
    d. Space attachment brackets as indicated in the manufacturer's instructions.
2. Aluminum pipe handrails and guardrails:
    a. During construction, keep exterior surfaces of handrails and guardrails covered with minimum 0.4 millimeters of heat shrink polyethylene film.
    b. Do not remove protective film before handrails and guardrails have been accepted by Engineer nor before other work in proximity of handrails and guardrails has been completed.
    c. Discontinue handrails and guardrails at lighting fixtures.
    d. Provide 1/8-inch diameter weep hole at base of each post.
    e. Space posts as indicated on the Drawings.
    f. Anchor posts into concrete by grouting posts into formed holes in concrete, into stainless steel sleeves cast in concrete; or bracket mount to face of concrete surfaces as specified and indicated on the Drawings.
    g. Space rails as indicated on the Drawings.
    h. Make adequate provision for expansion and contraction of kick plates and rails.
        1) Make provisions for removable sections where indicated on the Drawings.
    i. Make lower rails a single, unspliced length between posts, or continuous.
    j. Make top rails continuous whenever possible, and attach single, unspliced lengths to 3 posts minimum.
    k. Draw up fasteners tight with hand wrench or screw driver.
    l. Space attachment brackets as indicated on shop drawings or in manufacturer's installation instructions.
    m. Completed installation shall have handrails and railings rigid and free of play at joints and attachments.
    n. Protect handrail and guardrail finish from scratches, gouges, dents, stains, and other damage.
    o. Replace damaged or disfigured handrails and guardrails with new.

p. Shortly before final acceptance of the work, and after removal of protective polyethylene film, clean handrails and guardrails with mild detergent or with soap and water.
    1) After cleaning, thoroughly rinse handrails and guardrails and wipe with soft cloth.
q. Erect guardrail straight, level, plumb, and true to the positions as indicated on the Drawings. Correct deviations from true line of grade, which are visible to the eye.

C. Stainless Steel:
    1. Welding:
        a. Passivate field-welded surfaces:
            1) Provide cleaning, pickling and passivating as specified in this Section.
            2) Clean using Derustit Stainless Steel Cleaner, or equal.

END OF SECTION

SECTION 06608

FIBERGLASS REINFORCED PLASTIC

PART 1 GENERAL

1.01 SUMMARY

A. Section includes: General fabrication and design requirements for fiberglass reinforced plastic fabrications.

1.02 REFERENCES

A. American Society of Mechanical Engineers (ASME):
   1. RTP-1 - Reinforced Thermoset Plastic Corrosion Resistant Equipment.

B. ASTM International (ASTM):
   1. C582 - Standard Specification for Contact-Molded Reinforced Thermosetting Plastic (RTP) Laminates for Corrosion-Resistant Equipment.
   2. D883 - Standard Terminology Relating to Plastics.
   3. D2563 - Standard Practice for Classifying Visual Defects in Glass-Reinforced Plastic Laminate Parts.
   4. D2583 - Standard Test Method for Indentation Hardness of Rigid Plastics by Means of a Barcol Impressor.
   5. D2584 - Standard Test Method for Ignition Loss of Cured Reinforced Resins.
   6. D3299 - Standard Specification for Filament-Wound Glass Fiber Reinforced Thermoset Resin Corrosion-Resistant Tanks.
   7. D4097 - Standard Specification for Contact-Molded Glass-Fiber-Reinforced Thermoset Resin Corrosion-Resistant Tanks.

1.03 DEFINITIONS

A. Chopped Glass: Fibrous material consisting of randomly oriented chopped filaments applied directly to a mold surface or laminated under construction by a chopper gun.

B. Equipment: The fiberglass reinforced plastic equipment, including ancillary equipment, work, and materials as described in this specification.

C. Fabrication Drawings: Those drawings produced by the Fabricator or Contractor, with the intention of providing the necessary information to construct or install the equipment.

D. Fiber Prominence (Jackstraw): The distinct visibility of individual glass strands causing a loss of translucency of the laminate.

E. Fiberglass Reinforced Plastic: Fiberglass Reinforced Plastic or glass fiber and resin fabrication consisting of approximately 35 to 55 percent glass fiber reinforcement by weight for hand lay-up structural laminates and 55 to 70 percent glass for filament wound structural laminates, unless otherwise specified.

F. Mat: Fibrous material consisting of randomly oriented chopped or swirled filaments loosely held together with a binder.

G. The terminology of this specification is in accordance with ASTM D883. Fabricators using this specification are responsible for correct interpretation.

1.04 SUBMITTALS

A. Shop drawings and calculations:
   1. Submit general arrangement and fabrication drawings, calculations, and elements of the design.
   2. Include submittal information which describes specifically how the equipment is to be built and details necessary to ascertain that products meet specified requirements. Provide in the form of drawings, standards, specifications, or other shop instructions, but may also be partially contained in quality control records. The submittal shall include, but not be limited to:
      a. Fabrication drawings.
      b. General arrangement drawings signed by an Engineer registered in the state where the project is located, showing complete structural, fasteners, and erection procedures for a complete assembly.
      c. Quality control programs.
      d. Verification that the manufacturer has been engaged in fabrication of similar fiberglass reinforced plastic equipment for a minimum of 5 years.
      e. Statement of compliance with contract design requirements, codes, and standards.
      f. Recommendation for each resin selection from resin manufacturer.
      g. Type and amounts of fillers.
      h. Nominal corrosion liner description.
      i. Reinforcement types and glass content range for hand lay-up laminates.
      j. For filament wound laminates:
         1) Helix angle.
         2) Glass content range.
         3) Strand yield.
         4) Strand per inch in the winding band.
         5) Ply thickness.
         6) Amount of chop or unidirectional roving interspersed with winding, if any, and location within laminate.
      k. For other components:
         1) Construction type.
         2) Laminate thicknesses.
         3) Ply sequences.
         4) Glass content range.
      l. For secondary overlays (both interior and exterior):
         1) Laminate thicknesses.
         2) Ply sequences and widths.
      m. Construction details: Construction details for assembly and other special configurations, including:
         1) Tank bottom/top attachments with knuckle configuration and overlays and thicknesses.
         2) Tank support and anchor lugs, including attachment details.

3) Tank nozzles and installation, including cutout reinforcement, gusseting, and similar items.
4) Tank lateral or other support fabrication details, including platform attachment clips and/or shoulders.
5) Scrubber configuration and fabrication details of internal support system and other specialty items.
6) Cover panel joints, anchorage detail, and details of doors and inspection ports and their attachment or incorporation within the cover.

n. Miscellaneous equipment required.
o. Test reports and certification of compliance with physical property requirements.
p. Color samples.
q. Manufacturer's installation instructions.
r. ASME RTP-1 certification.

B. Operation and Maintenance Data.

C. Warranty.

1.05 QUALITY ASSURANCE

A. Manufacturer qualifications: Fiberglass reinforced plastic manufacturer with experienced personnel, physical facilities, and management capacity sufficient to produce custom-made glass fiber and resin products of quality and size specified for minimum 5 years with satisfactory performance record.

B. Quality assurance plan: Fabricator shall be responsible for implementation of a comprehensive quality assurance plan. The quality assurance plan describes procedures with the following minimum requirements:
1. Fabricator shall designate personnel to inspect equipment while in process and after completion to ensure compliance to every aspect of the section and fabrication drawings.
a. Inspection shall include, as a minimum, checks for visual defects, laminate thickness and sequence, glass content, Barcol hardness, dimensional tolerances, adherence to construction details, surface preparation, and environmental conditions.
b. Fabricator's inspector shall complete a report of the findings including method of measurement for each separate assembly.
2. Prior to use of resins in fabrication, fabricator shall extract samples of resins and retain them for use by the Engineer. Sample size shall be 100 cubic centimeters minimum:
a. Take 1 sample for each manufacturer's batch number if resin is received in the form it will be used.
b. If the fabricator alters the resin after receipt, such as through the addition of styrene, promoters, or other additives, take samples from each drum or portion thereof mixed with additives.
c. Fabricator shall provide documentation for each sample including resin type, manufacturer, batch and lot number, drum number, complete listing of additives with amounts added, and description and manufacturer of each additive.

3. Fabricator shall inspect glass reinforcement prior to use in fabrication.
    a. Do not use glass that does not meet the manufacturer's acceptance standards.
    b. Do not use glass material that is wet or has been wet.
    c. For each type of glass and lot number used, fabricator shall record the manufacturer, product description, binder type, product code, production date, and lot number.
    d. For mat, woven roving, unidirectional roving, and cloth, also include in records actual measured weight per square yard of material.
4. Fabricator shall retain nozzle cutouts and other excess laminate, clearly marking each piece to identify its original location. These laminate samples become the property of the Owner.
5. For areas where valid laminate samples are not available, take sample plugs at the Engineer's request.
    a. Repair subsequent holes in a manner acceptable to the Engineer.
6. Fabricator shall verify glass content on available samples in accordance with ASTM D2584. Complete this test and submit the results complete for each major component where samples are available.
7. Prior to final shipment of the equipment, fabricator shall submit to the Engineer a complete quality control report, consisting of copies of records maintained for compliance with this Section.

PART 2 PRODUCTS

2.01 DESIGN AND PERFORMANCE CRITERIA

A. Design fiberglass reinforced plastic tanks, scrubbers, and other vessels following the procedures and methods, utilizing the equations and formulas, and incorporating safety factors and allowable design stresses and strains set forth in ASME RTP-1. Base the design of duct and other fiberglass reinforced plastic equipment not covered by ASME RTP-1 on the engineering rationale, applicable formulas, and safety factors set forth in ASME RTP-1.

B. Perform calculations necessary to ensure long-term, low risk service of the fiberglass reinforced plastic equipment with minimum reasonable maintenance requirements.
    1. Long-term, low risk service is defined as a service life of 20 years without major structural failure or leakage.
    2. The design shall ensure proper functioning of the equipment at the stated operating conditions.
    3. The design shall include as a minimum, engineering calculations, materials selection and documented physical and mechanical properties, and detailed drawings required for fabrication and assembly of the equipment.

C. Design in accordance with applicable national, regional, and local design and building codes.
    1. Wind and seismic forces shall be determined in accordance with the building code as specified in Section 01410 - Regulatory Requirements.

D. Resistance to overturning shall not include the weight of the liquid contained in the equipment.

E. Consider the interaction of the installed system including but not limited to thermal expansion of duct, tanks, and vessels and the effects of external loading from piping, fans, pumps, platforms, and other attached items.

F. Allow for the most severe combination of conditions which may include, but not be limited to, the following:
   1. Internal or external pressure.
   2. Static head of contents (working and test conditions).
   3. Mass of structure and contents.
   4. Design temperature including upset conditions.
   5. Superimposed loads, such as seismic and wind forces.
   6. Bending moments due to eccentric loads.
   7. Localized loads acting at supports, lugs, and other attachments.
   8. Shock loads.
   9. Loads due to heating or cooling and thermal gradients.
   10. Loads applied during transport or erection.
   11. Loads imposed by personnel during erection and operations.
   12. Fatigue.

G. Use safety factors and allowable strains specified in ASME RTP-1 unless otherwise specified. Do not use safety factors and allowable strains less than the following:
   1. Allowable hoop and axial strain shall be 0.001 inch per inch for filament wound tanks.
   2. A safety factor of 10 for hand lay-up components in tension, flexure, or other loading conditions where elastic stability is not in question.
   3. A safety factor of 5 for external loading (vacuum) or local buckling due to seismic or wind loading.

H. Safety factors for upset conditions or infrequent loading situations may be less than the above values for the specific condition if acceptable to the Engineer.

I. There will typically be other aspects which should be considered. Identify and consider their effects, identify design limitations, and submit this information.

J. Provide test reports or other documentation for laminate properties used in the design. Laminates shall be similar in construction, layer sequence, resin type, and cure to those used to determine tested properties. Properties shall be adjusted to reflect reductions at operating temperatures. Test reports shall be provided for:
   1. Grating: Indicate grating strength and deflection.
   2. Physical properties of test cover panels.
   3. Tanks showing conformance with specified strength requirements.

K. The corrosion liner shall be a minimum of 100 mils in thickness, unless otherwise specified, and documentation shall be provided verifying veil type, liner thickness, and resin cure.
   1. Consider 50 mils of the corrosion liner as sacrificial and do not include it in determining structural wall thickness.

2. Use structural wall thickness not less than 0.375 inch for tanks and vessels and 0.1875 inch for ductwork.
3. Submit minimum structural thicknesses of other types of fiberglass reinforced plastic fabrications.

L. Laminate types may include hand layup, helical winding, and hoop/chop construction methods.
1. In laminates with helix angles greater than 80 degrees and in hoop/chop laminates, orientate approximately 10 percent of the structural wall thickness at 0 degrees (longitudinal direction).
2. Apply this reinforcement in at least 2 layers of weft unidirectional fabric and equally spaced within the structural wall.

M. For tanks and scrubbers; nozzles, determine manways and shell reinforcements according to the tables and formulas in ASME RTP-1.

N. Anchor tanks and vessels using lugs and a continuous filament wound band or an integral filament wound load ledge with external stainless steel anchor clips.
1. The anchor clips shall be bolted to the concrete foundation; use non-shrink grout to level anchor clips.
2. The design shall resolve the sum of the moments and the sum of the force equal to 0.

O. Design internal beams and support attachments using a maximum of 200 pounds per square inch shear stress for secondary bonds. Also apply this to design of external lugs required for ladders, platforms, and other attached items.

2.02 RESIN AND REINFORCEMENT MATERIALS

A. General physical properties: In accordance with ASTM C582, ASTM D3299, ASTM D4097, and ASME RTP-1 with verification of properties. Physical properties may include tensile, flexural, and compression modulus of elasticity and ultimate strengths, limiting strains, Poisson ratios, coefficients of expansion, and other directional properties as required for the design of the equipment.

B. Resin:
1. Fabricate equipment using the corrosion-resistant resin(s) specified in the fiberglass reinforced plastic equipment specifications. The fabricator is required to obtain independent endorsement of each resin selection from the resin manufacturer. Unless otherwise specified, use the resin throughout laminates.
2. The type of catalyst recommended varies between resin manufacturers. Submit resin/catalyst before fabrication begins to verify compliance to the resin manufacturer's recommended procedures.
3. Employ no fillers, additives, or pigments in the resin.
a. A thixotropic agent for viscosity control may be used in the proportion and type recommended by the resin manufacturer.
b. Use no thixotropic agent in the corrosion liner or on surfaces to be in contact with the corrosive environment.

4. Make resin putty using the same resin as was used in the original fabrication and shall contain milled glass fibers.
    a. The use of silica flour, grinding dust, or other fillers is not allowed.
5. When specified, add antimony trioxide or antimony pentoxide to the resin in the amount necessary to achieve the required fire retardancy rating in the structural wall only. Follow resin manufacturer's recommendations.
    a. Unless otherwise specified, the corrosion liner shall not contain this additive.

C. Reinforcement:
1. Show the type and sequence of reinforcements to be used on the fabrication drawings.
2. Use as commercial grade corrosion-resistant borosilicate glass fiber reinforcement, unless otherwise specified.
3. Use glass fiber reinforcing having a surface finish and binder that is specifically recommended by the glass manufacturer for the particular resin system to be used.
4. Use Type C (chemical grade) glass, 10 mils (0.01 inch) thickness, or polyester surfacing veil, such as Nexus surfacing veils.
5. Use Type E (electrical grade) glass, 1-1/2 ounces or 3/4-ounce per square foot, with nominal fiber length of 1.25, within 0.75 inch mat.
6. Continuous glass roving used in chopper guns for spray up shall be Type E chopper roving.
7. Woven roving shall be 24 ounces per square yard Type E glass and have a 5-by-4 plain weave.
8. Continuous roving used in filament wound structures shall be Type E glass winder roving with a yield of 200 yards or more per pound.
9. Use Type E glass unidirectional fabric. Weft unidirectional fabric shall be 15.7 ounces per square yard.
10. When specified, use Type ECR glass reinforcements supplied in similar fabric styles to those specified above.

2.03 FABRICATION

A. Molds:
1. Construct molds of a suitable material to produce a smooth and glossy corrosion liner surface on the fiberglass reinforced plastic equipment.
2. Covering of mandrels with cardboard must be accepted by the Engineer prior to start of fabrication.

B. Laminates:
1. Determine specified glass content in accordance with ASTM D2584.
2. Consider laminate thicknesses shown on the fabrication drawings as construction minimums. Verify that minimum thicknesses are obtained using the laminate sequences specified. When only total laminate thicknesses are specified, the minimum allowable structural laminate thickness shall be the total laminate thickness less the specified corrosion liner thickness.
3. Interruptions in laminating sequence shall follow the application of a ply of mat and be succeeded by a ply of mat.
4. The interruption shall not exceed 24 hours, and the in-process surface must retain acetone sensitivity until laminating is resumed. Lack of compliance with

these aspects or indication that contamination of the surface has occurred shall require that surface preparation be accomplished before resuming.

5. Chopped strand glass applied by chopper gun is allowed in lieu of mat layers in the structural laminates only.
   a. Chopper gun application of the corrosion liner is not allowed.
6. Coat non-mold surfaces with resin containing wax additive in the amount necessary to allow full cure of the surface. In the case of exterior surfaces, this wax coat shall also contain an ultraviolet stabilizer in the type and amount recommended by the resin manufacturer.
7. The exterior surface of equipment shall be resin-rich and reinforced with 1 layer C glass surfacing veil, unless otherwise specified.
8. When specified, the exterior coat shall be an opaque pigmented surface coat, applied only after Engineer's inspection. Color shall be selected by the Engineer.

C. Corrosion liner laminates:
   1. The inner surface of laminates shall be resin-rich and reinforced with surfacing veil of the type and number of layers as shown on the fabrication drawings.
   2. The interior layer of the corrosion liner shall consist of 1-1/2 ounces per square foot mat in the number of layers specified on the fabrication drawings. An exotherm interruption is specifically prohibited within the corrosion liner.
   3. Chopped glass applied by chopper gun is not allowed in the corrosion liner.
   4. Plies of the inner surface and interior layer are to gel completely before proceeding with the structural laminates.
   5. Completed corrosion liner as described above shall contain not less than 20 percent nor more than 30 percent glass by weight.
      a. Use no thixotropic material in the resin for the liner, nor in the fabrication of fiberglass reinforced plastic components intended for internal service.
      b. The completed liner shall be the minimum thickness.
   6. Do not use a separately cured unreinforced gel coat.

D. Hand lay-up structural laminates:
   1. The corrosion liner laminate shall be followed by hand lay-up structural laminates of varying reinforcement sequences as indicated on the fabrication drawings.
   2. For hand lay-up structural laminates, reinforcement shall consist of mat and woven roving in the sequence specified on the fabrication drawings.
   3. Woven roving shall have a ply of mat on each side. Two adjacent plies of woven roving are not permitted.
   4. Laminates containing primarily 1-1/2 ounces per square foot mat layers in conjunction with woven roving shall contain not less than 35 percent or more than 45 percent glass (by weight).
   5. Laminates containing primarily 3/4-ounce per square foot mat layers in conjunction with woven roving are considered to be high strength laminates and shall contain not less than 45 percent or more than 55 percent glass by weight.

E. Filament wound structural laminates:
   1. The corrosion liner laminate shall be followed by filament wound structural laminates as indicated on the fabrication drawings.

2. For filament wound structural laminates, reinforcement shall consist of continuous strand fiberglass roving applied with a minimum of interruptions until the specified minimum thickness is attained.
    a. This laminate shall contain 55 to 70 percent glass by weight as indicated on the fabrication drawings.
3. Each complete cycle of filament winding shall form a closed pattern of winding bands which completely covers the surface with 2 bi-directional layers.
    a. Each layer shall be a maximum of 1 roving in thickness.
    b. Uniformly space the filaments across the winding band without bunching or gaping.
4. Specify the helix angle of winding on the approved fabrication drawings, as measured from the centerline of revolution of the equipment shell.
5. Tolerance on helix angle is plus or minus 2 degrees, unless otherwise specified.
6. The fabrication drawings may require that layers of unidirectional roving be interspersed within the continuous filament winding.
7. Apply the unidirectional roving with the glass strand aligned in the axial direction, to within plus or minus 5 degrees.
8. If layers of mat or chopped glass are needed to ensure proper bonding of unidirectional roving, or within the filament winding to accommodate the Fabricator's manufacturing methods, consider the layers' extra material that will result in a thickness greater than specified. The amount of filament winding and unidirectional roving specified must still be applied.

F. Joining laminates:
1. Fiberglass reinforced plastic joining laminates are subject to applicable requirements specified in other sections for laminates.
2. Reinforce fiberglass reinforced plastic joints with an overlay of glass reinforcement and resin which extends equally within plus or minus 1/2 inch on each side of the joint. Use minimum thickness, ply sequence, and ply widths of fiberglass reinforced plastic joints as indicated on fabrication drawings.
3. Restrain parts to be joined to prevent movement until completion and cure of the joint overlay.
4. Fit-up parts and verify that tolerances and assembly requirements are satisfied. Completely fill the void between component parts with resin putty, taking care not to extrude an excessive amount of putty into the interior.

G. Environment:
1. The fabrication process and materials at the point of fabrication are to be maintained within a range of 60 to 95 degrees Fahrenheit. This temperature must also be at least 5 degrees greater than wet bulb temperature, as measured with a sling psychrometer.
2. Store materials in a dry area and within the temperature and humidity limits recommended by the manufacturers.

H. Flanges:
   1. Make flanges by hand lay-up construction with nozzle neck and flange made integrally in 1 piece and fabricated in accordance with the dimensions indicated on the fabrication drawings. Extend layers of reinforcement in the nozzle neck and hub uninterrupted into the flange.
   2. Build-up additional hub thickness using alternating layers of 1-1/2 ounces per square foot mat and 24 ounces per square yard woven roving.
   3. Build-up additional thickness in the flange using "ring" cutouts of mat, evenly distributed throughout the flange thickness.
   4. Press molded or filament wound flanges are not allowed.
   5. Overall machine facing of the back of flanges is not permitted.
      a. To obtain proper seating, spotface bolt holes for SAE size washers.
      b. Resin coat bolt holes and other cut surfaces so that no fibers are exposed.
      c. Spotfacing shall not produce a flange thickness less than indicated in the fabrication drawings.
   6. Bolt holes in flanges shall straddle principal centerlines of the Equipment. Tolerance in bolt hole locations and in diameter of bolt circle shall be plus 1/16 inch.
   7. Depressions or projections in flange face shall be no greater than 1/32 inch.

I. Allowable visual defects:
   1. Visual defects in areas of the equipment shall not exceed the maximum allowable levels of visual defects set forth in Table A, unless acceptable to Engineer.
   2. Visual defects in accordance with ASTM D2563.
   3. Presence of visual defects in excess of the allowable levels of Table A shall be grounds for rejection of the equipment. Listed quantities apply to small, localized areas and shall not be averaged over larger areas.
   4. For the purpose of Table A, use of the following definitions apply:
      a. INNER surface - Interior process surface, thickness of surfacing veil(s), and interface between veils and mat layers. Includes surfacing veils on internal joints.
      b. Interior mat layers - Layers of mat following the inner surface, and interface between liner and structural wall. Includes mat layers on internal joints.
      c. Structural wall - Layers of filament winding or alternating layers of mat and woven roving following the corrosion liner, and layers of mat and woven roving in internal overlays.
      d. Exterior surface - The exterior surface of the laminate and the thickness of the surfacing veil.
      e. Dimensions listed in Table A refer to the largest dimension measured for defects.

TABLE A MAXIMUM ALLOWABLE LEVELS OF VISUAL DEFECTS				
Condition/ Defect	**Inner Surface**	**Interior Mat Layers**	**Structural Wall**	**Exterior Surface**
Chip	None	None	None	
Crack	None	None	None	
Crazing	None	None	None	
Delamination	None	None	See Air Bubble	
Dry Spot	None	See Air Bubble	See Air Bubble	
Foreign Inclusion	None	Maximum Diameter 1/32"	See Air Bubble	
Fracture	None	None	None	None
Air Bubble/ Void	Less than 1/64" Ø unlimited. 1/64" to 1/16" Ø 2 / sq. in. Maximum Diameter 1/16"	Less than 1/32" Ø unlimited. 1/32" to 1/8" Ø 5 / sq. in. Maximum Diameter 1/8"	Less than 3/16" Ø unlimited. 3/16" to 1/4" Ø 2 / sq. in. Maximum Diameter 1/4"	
Blister	See Air Bubble	See Air Bubble	See Air Bubble	
Burned	None	None	None	
Pit (Pinhole)	Less than 1/32" Ø 50/square feet 1/32" to 1/16" Ø 10/square feet Maximum Diameter 1/16" Maximum Depth 1/32"	N/A	N/A	
Resin Pocket	None	Maximum 1 square inch per occurrence.	Maximum 1 square inch per occurrence.	
Wrinkle	Allowable if laminate is glass reinforced. No sharp edges allowed.	Allowable if laminate is glass reinforced and full mat layer thickness and total thick- ness are maintained.	Allowable if laminate is glass reinforced and full mat layer thickness and total thick- ness are maintained.	
Scratch	None	N/A	N/A	
Fiber Prominence	None	Maximum 10 fibers visible per square inch	Maximum 20 fibers visible per square inch	

2.04 SOURCE QUALITY CONTROL

A. Inspection:
   1. Owner's inspection: Permit the Engineer access to the equipment during fabrication and upon completion for the purpose of verifying compliance to the Contract Documents. The inspection is not intended to replace the Fabricator's own quality control procedures.
   2. In no respect does inspection of equipment by Engineer relieve the Fabricator of compliance with the Contract Documents.
      a. A final inspection will be performed by the Engineer.
   3. The Fabricator shall notify the Engineer at the completion of particular milestones during fabrication. The milestones are as follows:
      a. View tooling prior to fabrication.
      b. Beginning application of corrosion liner for each part, extraction of each part prior to beginning assembly.
      c. Upon completion of each separate assembly, Engineer reserves the right to include additional milestones.
   4. Allow Engineer to photograph the equipment while in process and/or upon completion.
   5. Engineer may use magnification or other special viewing or measurement devices during inspection.
   6. Evidence of poor workmanship or lack of compliance with aspects of the Contract Documents will be grounds for rejection of the equipment.
   7. Subsequent repair of rejected equipment may, at the Engineer's option, be undertaken in an attempt to bring the equipment to an acceptable state.
      a. Repair procedures must be accepted by the Engineer prior to implementation.

2.05 TESTING

A. The Engineer may employ destructive testing, such as ultimate tensile or flexure strength tests or glass content ignition tests, on available samples or use other non-destructive test methods, such as acoustic emission or ultrasonic polygauge thickness measurement, on the completed equipment for verification of compliance to the contract documents.

B. Testing performed by the Engineer will be accomplished through use of applicable ASTM test methods when appropriate.

C. Hardness tests will be made for acceptance by the Engineer on the liner surface using the Barcol impressor, Model GYZJ 934 1, calibrated at 2 points in accordance with ASTM D2583.
   1. Ten readings will be taken in a localized area, deleting the 2 highest and 2 lowest, and averaging the remaining 6.
   2. Minimum acceptable Barcol hardness will be a reading of 30 unless otherwise specified.

D. An acetone sensitivity test will also be performed by the Engineer as an acceptance criteria. Evidence of a sticky or tacky surface following rubbing with an acetone-saturated cloth will be grounds for rejection of the equipment.

PART 3 EXECUTION (NOT USED)

END OF SECTION

SECTION 09960

HIGH-PERFORMANCE COATINGS

TABLE OF CONTENTS

PART 1 GENERAL 2

1.01 SUMMARY 2
1.02 REFERENCES 2
1.03 DEFINITIONS 3
1.04 ABBREVIATIONS 5
1.05 SUBMITTALS 6
1.06 QUALITY ASSURANCE 7
1.07 PRODUCT DELIVERY, STORAGE, AND HANDLING 10
1.08 PROJECT CONDITIONS 11
1.09 MAINTENANCE 12
1.10 CTR RESPONSIBILITIES 13

PART 2 PRODUCTS 14

2.01 DESIGN AND PERFORMANCE CRITERIA 14
2.02 MATERIALS 14
2.03 COATING SYSTEMS IDENTIFICATION 14
2.04 PRODUCTS FOR COATING SYSTEMS 15

PART 3 EXECUTION 15

3.01 GENERAL PROTECTION REQUIREMENTS 15
3.02 GENERAL SURFACE PREPARATION REQUIREMENTS 16
3.03 MECHANICAL AND ELECTRICAL EQUIPMENT PREPARATION 17
3.04 CLEANING OF NEW AND PREVIOUSLY COATED OR NEW SURFACES 17
3.05 BLAST CLEANING 18
3.06 PREPARATION REQUIREMENTS FOR CONCRETE SURFACES 18
3.07 GENERAL PREPARATION REQUIREMENTS FOR METALLIC SURFACES 20
3.08 PREPARATION REQUIREMENTS BY SURFACE TYPE 21
3.09 APPLICATION REQUIREMENTS 22
3.10 APPLICATION REQUIREMENTS FOR CONCRETE COATING SYSTEMS 26
3.11 COATING SYSTEM SCHEDULE 27
3.12 SURFACES NOT REQUIRING COATING 27
3.13 QUALITY CONTROL 27
3.14 CORRECTIVE MEASURES 28
3.15 CLEANUP 29
3.16 FINAL INSPECTION 29

ATTACHMENT A - SCHEDULE OF SURFACES TO BE COATED

ATTACHMENT B - COATING DETAIL SHEET

PART 1 GENERAL

1.01 SUMMARY

A. Section includes: Coatings, including coating systems, surface preparation, application requirements, and quality control requirements.

1.02 REFERENCES

A. ASTM International (ASTM):
   1. D16 - Standard Terminology for Paint, Related Coatings, Materials, and Applications.
   2. D2200 - Standard Practice for Use of Pictorial Surface Preparation Standards and Guides for Painting Steel Surfaces.
   3. D3359 - Standard Test Methods for Rating Adhesion by Tape Test.
   4. D3960 - Standard Practice for Determining Volatile Organic Compound (VOC) Content of Paints and Related Coatings.
   5. D4262 - Standard Test Method for pH of Chemically Cleaned or Etched Concrete Surfaces.
   6. D4263 - Standard Test Method for Indicating Moisture in Concrete by the Plastic Sheet Method.
   7. D4285 - Standard Test Method for Indicating Oil or Water in Compressed Air.
   8. D4414 - Standard Practice for Measurement of Wet Film Thickness by Notch Gages.
   9. D4417 - Standard Test Methods for Field Measurement of Surface Profile of Blast-Cleaned Steel.
   10. D4541 - Standard Test Methods for Pull-Off Strength of Coatings Using Portable Adhesion Testers.
   11. D4787 - Standard Practice for Continuity Verification of Liquid or Sheet Linings Applied to Concrete Substrates.
   12. D5162 - Standard Practice for Discontinuity (Holiday) Testing of Nonconductive Protective Coating on Metallic Substrates.
   13. D7234 - Standard Test Method for Pull-Off Adhesion Strength of Coatings on Concrete Using Portable Pull-Off Adhesion Testers.
   14. E337 - Standard Test Method for Measuring Humidity with a Psychrometer (the Measurement of Wet- and Dry-Bulb Temperatures).
   15. F1869 - Standard Test Method for Measuring Moisture Vapor Emission Rate of Concrete Subfloor Using Anhydrous Calcium Chloride.
   16. F2170 - Standard Test Method for Determining Relative Humidity in Concrete Floor Slabs Using In-situ Probes.

B. International Concrete Repair Institute (ICRI):
   1. 310.2 - Guideline for Selecting and Specifying Concrete Surface Preparation for Sealers, Coatings, Polymer Overlays, and Concrete Repair.

C. NACE International (NACE):
   1. SP0178 - Design, Fabrication, and Surface Finish Practices for Tanks and Vessels to Be Lined for Immersion Service.
   2. SP0188 - Discontinuity (Holiday) Testing of New Protective Coatings on Conductive Substrates.

D. National Association of Pipe Fabricators (NAPF):
   1. 500-03 - Surface Preparation Standard for Ductile Iron Pipe and Fittings in Exposed Locations Receiving Special External Coatings and/or Special Internal Linings.

E. Occupational Safety and Health Administration (OSHA).

F. Society of Protective Coatings (SSPC):
   1. Glossary - SSPC Protective Coatings Glossary.
   2. Guide 6 - Guide for Containing Surface Preparation Debris Generated during Paint Removal Operations.
   3. Guide 15 - Field Methods for Retrieval and Analysis of Soluble Salts on Steel and Other Nonporous Substrates.
   4. PA 1 - Shop, Field, and Maintenance Painting of Steel.
   5. PA 2 - Procedure for Determining Conformance to Dry Coating Thickness Requirements.
   6. PA 9 - Measurement of Dry Coating Thickness Using Ultrasonic Gages.
   7. QP 1 - Standard Procedure for Evaluating the Qualifications of Industrial/Marine Painting Contractors.
   8. SP 1 - Solvent Cleaning.
   9. SP 3 - Power Tool Cleaning.
   10. SP 5 - White Metal Blast Cleaning.
   11. SP 10 - Near-White Metal Blast Cleaning.
   12. SP 11 - Power Tools Cleaning to Bare Metal.
   13. SP 13 - Surface Preparation of Concrete.
   14. SP 16 - Brush-Off Blast Cleaning of Coated and Uncoated Galvanized Steel, Stainless Steels, and Non-Ferrous Metals.
   15. SP COM - Surface Preparation Commentary.
   16. SP VIS 1 - Guide and Reference Photographs for Steel Surfaces Prepared by Dry Abrasive Blast Cleaning.
   17. SP WJ-1 - Waterjet Cleaning of Metals -- Clean to Bare Substrate.
   18. SP WJ-2 - Waterjet Cleaning of Metals -- Very Thorough Cleaning.
   19. SP WJ-3 - Waterjet Cleaning of Metals -- Thorough Cleaning.
   20. SP WJ-4 - Waterjet Cleaning of Metals -- Light Cleaning.

1.03 DEFINITIONS

A. Definitions used in this Section are in accordance with definitions referenced in ASTM D16, ASTM D3960, and SSPC Glossary of Definitions.

B. Specific definitions:
   1. Abrasive: Material used for blast cleaning, such as sand, grit, or shot.
   2. Abrasive Blast Cleaning: Cleaning/surface preparation by abrasive propelled at high speed.
   3. Anchor Pattern: Profile or texture of prepared surface(s).
   4. Biogenic Sulfide Corrosion: Corrosion caused by sulfuric acid formed when *Thiobacillus* bacteria metabolizes hydrogen sulfide.
   5. Bug Holes: Small cavities resulting when air bubbles are entrapped in the surface of formed concrete during placement and consolidation.
   6. System: Protective film with 1 or more coats applied in a predetermined order, including surface preparation and quality control requirements.

7. Coating/Paint/Lining Thickness: Total thickness of primer, intermediate, and/or finish coats after drying or curing.
8. Dew point: Temperature a given air/water vapor mixture starts to condense.
9. Drying Time: Time interval between application and material curing.
10. Dry to Recoat: Time interval between material application and its ability to receive the next coat.
11. Dry to Touch: Time interval between material application and its ability to tolerate a light ouch without coating damage.
12. Exposed Surface: Any indoor or outdoor surface not buried or encased.
13. Feather Edging: Reducing coating thickness at its edge to blend with existing surrounding coating.
14. Feathering: Tapering off a wet edge with a comparatively dry brush.
15. Ferrous: Cast iron, ductile iron, wrought iron, and all steel alloys except stainless steel.
16. Field Coat: Application of a surface coating system at the work site.
17. Finish Coat: Final coat in a paint system, including texture, color, smoothness of surface, and other properties affecting appearance.
18. Hold Point: A defined point, specified in this Section, at which work shall be halted for inspection.
19. Holiday: A discontinuity, skip, void, or pinhole in coating or coating system film that exposes the substrate.
20. Honeycomb: Segregated and porous surface of hardened concrete due to insufficient consolidation.
21. Hydroblast: High or ultra-high-pressure water jet surface preparation.
22. Incompatibility: One coating's inability to overlay another coating or surface as evidenced by bleeding, poor bonding, or lifting of old coating; inability of a coating to bond to a substrate.
23. Immersed/Immersion: A service condition in which substrate is submerged, is immediately above liquids, or is subject to frequent wetting, splashing, or washdown.
24. Laitance: A thin, weak, brittle layer of cement and aggregate fines on a concrete surface.
25. Mil: 0.001 inch.
26. Overspray: Dry spray, particularly paint bonded to an unintended surface.
27. Pinhole: A small diameter discontinuity in a coating or coating system film, created by offgassing from a void in a concrete or masonry substrate causing a void between coats or exposing the substrate. Usually caused by coating application while temperature is rising.
28. Pot Life: Time interval after components are mixed and coating can be satisfactorily applied.
29. Prime Coat: First full paint coat applied to a surface when using a multicoat system. Primers adhere to a new substrate, protect the substrate, and promote adhesion of subsequent coats of paint. The prime coat on metal surfaces is the first full coat and does not include solvent wash, grease emulsifiers, or other pretreatment applications.
30. Resurfacer/Resurfacing Material: A layer of cementitious and/or resin-based material used to fill or otherwise restore surface continuity to worn or damaged concrete surfaces.
31. Shelf Life: Maximum storage time a material may be stored without losing its usefulness.

32. Shop Coat: 1 or more coats applied in an off-site shop or plant before shipment to work site where field or finishing coat(s) are applied.
33. Spreading Rate: Area covered by a unit volume of paint at a specific thickness.
34. Stripe Coat: A separate brush coat of paint applied to all weld seams, pits, nuts/bolts/washers, and edges. This coat shall not be applied until previous coats have cured. Once applied, the coat shall be allowed to cure before subsequent coats are applied.
35. Tie Coat: An intermediate coat that bonds different types of paint material, improving succeeding coat adhesion.
36. Thick Film Coating System: A coating system applied with a minimum dry film thickness of 25 mils.
37. Touch-Up Painting: Application of paint on previously painted surfaces to repair marks, scratches, and deteriorated or damaged areas to restore the appearance and performance of the coating.
38. Water Blast: An alternative to air abrasive blast cleaning that can be used with or without abrasive injection. Water cleaning at pressures up to 5,000 pounds per square inch is called low-pressure water cleaning or power washing. High-pressure water cleaning uses water pressures between 5,000 and 10,000 pounds per square inch. Water jetting is water blasting with added abrasive at pressures between 10,000 and 25,000 pounds per square inch. Ultra-high-pressure water jetting is water blasting at pressures above 25,000 pounds per square inch.
39. Weld Splatter: Beads of non-structural weld metal that adhere to the surrounding surface, removed as part of surface preparation.

1.04 ABBREVIATIONS

A. CSM - Coating System Manufacturer.

B. CMU - Concrete Masonry Units.

C. CSA - Coating System Applicator. Specialty subcontractor retained by the Contractor to install the coating systems specified in this Section.

D. CTR - Coating System Manufacturer's Technical Representative.

E. DFT - Dry-Film Thickness. Thickness of cured film, usually expressed in mils (0.001 inch).

F. SSD - Surface Saturated Dry. Refers to concrete surface condition where the surface is saturated (damp) without the presence of standing water.

G. TPC - Technical Practice Committee.

H. VOC - Volatile Organic Compound. Portion of the coating that is a compound of carbon, is photochemically reactive, and evaporates during drying or curing; expressed in grams per liter (g/l) or pounds per gallon (lb/gal). VOC is determined by EPA Method 24.

I. WFT - Wet Film Thickness. Coating thickness as measured immediately after application. Usually expressed in mils (0.001 inch).

1.05 SUBMITTALS

A. As specified in Section 01330 - Submittal Procedures, submit the following:
   1. Schedule of proposed coating materials.
   2. Schedule of surfaces to be coated with each coating material.
   3. Dehumidification and heating plan.
   4. Product data:
      a. Physical properties of coatings, including the following:
         1) Solids content.
         2) Ingredient analysis.
         3) VOC content.
         4) Temperature resistance.
         5) Typical exposures and limitations.
         6) Manufacturer's standard color chips.
      b. Compliance with regulatory requirements:
         1) VOC limitations.
         2) Lead compounds and polychlorinated biphenyls.
         3) Abrasives and abrasive blast cleaning techniques and disposal.
         4) Methods for tenting blasting areas and methods to protect existing equipment from dust and debris.
         5) NSF certification of coatings for potable water supply systems.
      c. CSM's current printed recommendations and product data sheets for coating systems, including:
         1) Surface preparation recommendations.
         2) Primer type.
         3) Maximum dry and wet-mil thickness per coat and number of coats.
            a) Coating Coverage Worksheets.
         4) Minimum and maximum curing time between coats, including atmospheric conditions for each.
         5) Curing time before submergence in liquid.
         6) Thinner to be used for each coating.
         7) Ventilation requirements.
         8) Minimum and maximum atmospheric conditions during which the paint shall be applied.
         9) Allowable application methods.
         10) Maximum allowable substrate moisture content.
         11) Maximum shelf life.
         12) Requirements for transportation and storage.
         13) Mixing instructions.
         14) Shelf life.
         15) Material Pot life.
         16) Precautions for applications free of defects.
         17) Method of application.
         18) Drying time of each coat, including prime coat.
         19) Compatible prime coats.
         20) Limits of ambient conditions during and after application.
         21) Required protection from sun, wind, and other conditions.
         22) Touch-up requirements and limitations.
         23) Minimum adhesion of each system submitted in accordance with ASTM D4541 and ASTM D7234.

d. Samples: Include 8-inch square drawdowns or brushouts of topcoat finish when requested. Identify each sample as to finish, formula, color name and number, sheen name, and gloss units.
e. Affidavits signed by an officer of the CSM's corporation attesting to full compliance of each coating system component with current federal, state, and local air pollution control regulations and requirements.
f. List of cleaning and thinner solutions allowed by the CSMs.
g. Storage requirements, including temperature, humidity, and ventilation for Coating System Materials as recommended by the CSMs.
h. Thick film coating systems (greater than 25 mils):
    1) CSM's detailed written instructions for coating system treatment and graphic details for coating system terminations in coated structures, including pipe penetrations, metal embedments, gate frames, and other terminations encountered.
    2) Include detail treatment for coating system at concrete joints.
    3) Manufacturer's Representative's (CTR) Field Reports.

5. Quality assurance submittals:
    a. Quality assurance plan.
    b. Qualifications of CSA, including:
        1) List of Similar Projects.
            a) Name and address of project.
            b) Year of installation.
            c) Year placed in operation.
            d) Point of contact: Name and phone number.
        2) Provide a minimum of 5 project references, each including contact name, address, and telephone number where similar coating work has been performed by their company in the past 5 years.
    c. CSA Reports:
        1) Written daily quality control inspection reports.
    d. CTR Reports:
        1) Reports on visits to project site to view and approve surface preparation of structures to be coated.
        2) Reports on visits to project site to observe and approve coating application procedures.
        3) Reports on visits to coating plants to observe and approve surface preparation and coating application on shop-coated items.

1.06 QUALITY ASSURANCE

A. CSA qualifications:
    1. Minimum of 5 years of experience applying specified type or types of coatings under conditions similar to those of the Work:
        a. Provide qualifications of applicator and references listing 5 similar projects completed in the past 5 years.
    2. SSPC-QP 1 certified.
    3. Manufacturer-approved applicator when manufacturer has approved applicator program or when required in these specifications.

B. CTR qualifications:
   1. Certification, one of the following:
      a. NACE Level 2 or 3 Certified Coating Inspector.
      b. SSPC Level 3 Protective Coatings Inspector.
   2. Minimum of 5 years of experience evaluating application of manufacturer's coatings under conditions similar to those of the Work:
      a. Provide CTR qualifications and references listing 5 similar projects completed in the past 5 years.

C. Regulatory requirements: Comply with governing agencies' regulations by using coatings conforming to their VOC limits.
   1. Lead-based coatings are not permitted.
   2. Do not use coal-tar epoxy in contact with drinking water or exposed to ultraviolet radiation.

D. Certification:
   1. Certify that applicable pigments resist deterioration when exposed to hydrogen sulfide and other sewage gases.
   2. Product data shall designate coating as being suitable for wastewater service.

E. Pre-installation conference: Conduct as specified in Section 01312 - Project Meetings.
   1. Coordinate Hold Point schedule.

F. Field samples:
   1. Prepare and coat a minimum 100-square-foot area of each system between corners or limits such as control or construction joints.
   2. Approved field sample may be part of the Work.

G. Obtain approval before coating other surfaces. Use products by same manufacturer for prime coats, intermediate coats, and finish coats on same surface, unless specified otherwise.

H. CSM services:
   1. CSA shall arrange for CTR to attend pre-installation conferences.
   2. Visit the project site periodically to consult on and inspect specified surface preparation and application Hold Points.
   3. Visit coating plants to observe and approve surface preparation procedures and coating application of items to be shop primed and coated.
   4. CTR shall provide written inspection reports.

I. Quality control requirements:
   1. Contractor shall be responsible for the workmanship and quality of the coating system installation.
      a. Inspections by Owner, Engineer, CSA, or CTR will not relieve or limit Contractor’s responsibilities.
   2. Conform to this specification's requirements and the standards referenced in this Section. Changes in the coating system application requirements will be allowed only with the Engineer's written acceptance.

3. Specially trained crews with experience applying the specified coating system coating are required for:
    a. Coating application using plural component spray equipment or other specialty equipment.
    b. Coating with specialty linings for severe service conditions, including floor coatings, and with linings for corrosive headspaces or secondary containment areas.
4. CTR shall specially train personnel for coating systems as specified in Attachment B - Coating Detail Sheets.
    a. CSM shall approve personnel in writing applying the coating system.
5. Do not use contaminated, outdated, diluted materials, and/or materials from previously opened containers.
6. Identify inspection access points used by Owner's or Engineer's personnel.
7. Provide ventilation, ingress, egress, or other means as necessary for Owner's or Engineer’s personnel to safely access the work areas.
8. Conduct and continually inspect work so the coating system is installed as specified. The CSM shall provide written directions to correct coating work not conforming to the specifications or is otherwise unacceptable.
9. Provide written daily reports summarizing test data, work progress, surfaces covered, ambient conditions, quality control inspection test findings, and other information pertinent to the coating system application.
    a. Determine relative humidity in accordance with ASTM E337. Confirm other conditions, such as proper protective measures for surfaces not to be coated and safety requirements for personnel.
        1) Measure daily at shift's beginning and end and at intervals not to exceed 4 hours during the shift.
        2) Determine the acceptability of weather and/or environmental conditions within the structure in accordance with the CSM's requirements.
    b. Monitoring surface preparation: Spot check cleanliness, surface profile, and surface pH testing at least 3 times daily. Check each surface at least once. In accordance with:
        1) ASTM D4262.
        2) ASTM D4263.
        3) ASTM D4417.
        4) ICRI 310.2 requirements.
        5) SSPC Surface Preparation Standards.
    c. Confirm that compressed air used for surface preparation or blow-down cleaning is free of oil and moisture.
    d. Monitor surface preparation daily at shift's beginning and end and at intervals not to exceed 4 hours during the shift.
    e. Do not apply coatings when environmental conditions are outside of the CSM's published limits.
    f. Monitoring coatings application: Continuously inspect, measure, and record the wet film thickness and general film quality (visual inspection) for runs, sags, pinholes, holidays, etc. during coating.
        1) Perform WFT measurements in accordance with ASTM D4414.
    g. Post cure evaluation: Measure and inspect the overall dry film thickness on all surfaces. Conduct a DFT survey and perform adhesion testing, holiday detection, or cure testing as required in this Section and/or the CSM’s written instructions. Perform all applicable tests in accordance with

ASTM D4541, ASTM D4787, ASTM D5162, ASTM D7234, SSPC-PA 1, SSPC-PA 2, SSPC-PA 9, and other pertinent standards and recommended practices.

J. Inspection at Hold Points:
   1. Conduct inspections at Hold Points during the coating system application and record the results.
   2. Coordinate Hold Points with the Engineer so the Engineer can observe Contractor's inspections on a scheduled basis.
   3. Provide the Engineer a minimum of 24 hours of notice before conducting Hold Point Inspections.
   4. Hold Points shall be as follows:
      a. Conditions before surface preparation: Before starting surface preparation, observe, record, and confirm that oil, grease, and/or soluble salts are gone from the surface.
      b. Post surface preparation: After completing surface preparation, measure and inspect for cleanliness and proper surface profile as specified in this Section and in the CSM's written instructions.
      c. Coatings application: At the beginning of coating system application, measure, record, and confirm acceptability of surface and ambient air temperature and humidity. Inspect applicator's equipment for serviceability and suitability for coatings application.
         1) Observe conditions during the Pre-application Meeting.

1.07 PRODUCT DELIVERY, STORAGE, AND HANDLING

A. Deliver, store, and handle products as specified in Section 01600 - Product Requirements.

B. Immediately remove unspecified and unapproved coatings from Project site.

C. Deliver new labeled, unopened containers:
   1. Do not deliver materials after manufacturer's expiration date or over 12 months from manufacturing date, whichever is more stringent. Store materials in well-ventilated enclosed structures and protect from weather and excessive heat or cold in accordance with the CSM's recommendations.
      a. Store flammable materials in accordance with federal, state, and local requirements.
      b. Store rags and cleanup materials appropriately to prevent fire and spontaneous combustion.
   2. Store and dispose of hazardous waste in accordance with federal, state, and local requirements. This requirement specifically applies to waste solvents and coatings.
   3. Container labels shall show the following:
      a. Brand name or product title.
      b. CSM's batch number.
      c. CSM's manufacture date.
      d. CSM's name.
      e. Generic material type.
      f. Application and mixing instructions.
      g. Hazardous material identification label.

h. Shelf life expiration date.
i. Color.
j. Mixing and reducing instructions.

4. Clearly mark containers to indicate safety hazards associated with the use of or exposure to materials.

1.08 PROJECT CONDITIONS

A. Apply coatings to dry surfaces.
1. Surface moisture: Comply with manufacturer's requirements or as specified in this Section.
a. Concrete floors: Moisture vapor transmission rate of no more than 3.0 pounds per 1,000 square feet per 24 hours in accordance with ASTM F1869 or relative humidity no greater than 80 percent if tested in accordance with ASTM F2170 unless the CSM's recommendations are more restrictive.
b. Concrete structures: Negative results from Plastic Sheet Test in accordance with ASTM D4263, and maximum of 80 percent relative humidity in accordance with ASTM F2170.

B. Do not apply coatings when the following conditions exist. If such conditions exist, provide containment, covers, environmental controls, and other necessary measures.
1. During rainy, misty, or damp weather, or to surfaces with frost or condensation.
2. When the surface temperature is below 10 degrees Fahrenheit above the dew point.
3. When ambient or surface temperature:
a. Is less than 55 degrees Fahrenheit unless manufacturer allows a lower temperature.
b. Is less than 65 degrees Fahrenheit for clear finishes, unless manufacturer allows a lower temperature.
c. Exceeds 90 degrees Fahrenheit, unless manufacturer allows a higher temperature.
d. Exceeds manufacturer's recommendation.
4. When relative humidity is higher than 85 percent.
5. Under dusty or adverse environmental conditions.
6. When light on surfaces measures less than 15 foot-candles.
7. When wind speed exceeds 15 miles per hour.

C. Apply coating only under evaporation conditions rather than condensation.
1. Use dehumidification equipment, fans, and/or heaters inside enclosed areas to maintain required atmospheric and surface temperature requirements for proper coating application and cure.
2. Measure and record relative humidity and air and surface temperatures at the start and end of each shift to confirm proper humidity and temperature levels inside the work area.
a. Submit test results.

D. Systems:
   1. Site electrical power availability as specified in Section 01500 - Temporary Facilities and Controls.
   2. Internal combustion engine generators may be used.
      a. Obtain required permits and provide air pollution and noise control devices on equipment as required by permitting agencies require.
      b. Comply with state, federal, and local fire and explosion protection measures when locating and operating generator.
      c. Locate engine generator outside hazardous classified areas per NFPA 820.
      d. Provide daily fuel service for generator for duration of use.
   3. Dehumidification:
      a. Provide desiccant or refrigeration drying.
      b. Use only desiccant types with a rotary desiccant wheel capable of continuous operation.
      c. Liquid, granular, or loose lithium chloride drying systems are not acceptable.
   4. Heating:
      a. Use electric, indirect combustion, or steam coil.
      b. Direct-fired combustion heaters are not acceptable heat sources during abrasive blasting, coating application, or coating cure.
   5. Filters:
      a. Use a filtration system for dust removal designed to not interfere with dehumidification equipment's ability to control dew point and relative humidity inside the reservoir.
      b. Do not allow air from the working area or dust filtration equipment to recirculate through thein dehumidifier during coating application or when solvent vapors are present.
   6. Design and submittals:
      a. Prepare and submit dehumidification and heating plan, including all equipment and operating procedures.
      b. Suppliers of services and equipment shall have at least 3 years of experience in similar applications.

1.09 MAINTENANCE

A. Provide table of products applied organized by surface type. List coating manufacturer, color, color formulation, distributor name, telephone number, and address.

B. Provide extra materials:
   1. Minimum 1 gallon of each type and color of coating applied or provide additional quantities if specified in the Contract Documents:
      a. Deliver unopened factory-labeled cans when manufacturer packages material in gallon cans.
      b. Deliver material in new gallon containers, properly sealed and identified with permanently affixed, durable, printed labels indicating brand, type, and color, when manufacturer does not package material in gallon cans, deliver.

1.10 CTR RESPONSIBILITIES

A. General:
   1. Attend pre-installation conference.
   2. Perform onsite application training.
   3. Periodically inspect coating system application.

B. Coating system installation training:
   1. Provide a minimum of 8 hours of classroom and off-site training for application personnel and supervisory personnel in one of the following ways:
      a. Train a minimum of 2 supervisory personnel and 2 application personnel.
      b. Submit a letter from the CSM stating that CSM approves the supervisory and application personnel, listed by name and responsibility, and no additional training is required.
   2. CTR can train up to 14 application personnel and 3 supervisory personnel at a time.
   3. Minimum training requirements:
      a. Explain in detail the mixing, application, curing, and termination requirements.
      b. Provide hands-on demonstration of coating system mixing.
      c. Explain in detail the ambient condition requirements for temperature and humidity.
      d. Explain in detail the surface preparation requirements.
      e. Explain in detail the re-coat times, cure times, and related ambient condition requirements.
      f. Write a letter stating that training was satisfactorily completed by the personnel, listed by name and responsibility.
   4. Provide special training as specified in the Coating Detail Sheets.

C. Coating system inspection:
   1. CTR inspection is in addition to the CSA's inspection as specified in this Section.
   2. Be on-site to oversee:
      a. Coating application at least once a week.
      b. End of surface preparation.
      c. During coating application.
      d. Post-cure inspection.
   3. Routinely inspect and verify in writing that application personnel have successfully performed surface preparation, filler/surfacer application, coating system application, and Quality Control Inspection in accordance with this Section and to warrantable quality.
   4. Perform the following activities to confirm conformance with the specifications:
      a. Inspect ambient conditions during coating system installation at Hold Points for conformance with the specified requirements.
      b. Inspect each coated surface type and coating system applied to verify the following:
         1) Cleanliness.
         2) Surface pH for concrete substrates.
         3) Confirm surface preparation of substrates where coating system will terminate or will be applied for conformance to the specified application criteria.

c. Verify surface profile of substrates by completing the following:
   1) Inspect preparation and application of coating detail treatment at terminations, transitions, metal embedments in concrete, and joints and cracks in substrates.
   2) Inspect application of filler/surfacer materials for concrete and masonry substrates.
   3) Verify proper mixing of coating materials.
   4) Inspect application of primers and finish coats, including wet and dry film thickness.
   5) Inspect coating systems for proper cure times and conditions.
d. Review adhesion testing of cured coating systems.
e. Review coating system continuity testing.
f. Inspect and record representative-localized repairs.
g. Conduct final review of completed coating system installation.
h. Prepare and submit site visit reports after each site visit to document that the coating work is in accordance with the CSM's Recommendations.

PART 2 PRODUCTS

2.01 DESIGN AND PERFORMANCE CRITERIA

A. Coating materials shall be formulated for environments encountered in water and wastewater treatment processes.

2.02 MATERIALS

A. General:
   1. Product requirements as specified in Section 01600 - Product Requirements.

2.03 COATING SYSTEMS IDENTIFICATION

A. Naming Conventions: Coating Systems Identifications contain the elements defined in Table 1.

Table 1 Coating System Identification Elements

First Element	-	Second Element	-	Third Element	-	Fourth Element (optional)
3 or 4 alpha characters		1-3 alpha characters		1 number		3 or 4 alpha characters
Coating Type		Substrate		System Number		Additional Substrate or Special Condition
Example: EPX	-	C	-	6	-	BSC

1) First element identifies the coating type using the following abbreviations:
   a) ACR: Acrylic.
   b) CTE: Coal tar epoxy.
   c) ELA: Elastomeric acrylic.
   d) EPU: Epoxy-polyurethane.
   e) EPX: Epoxy.
   f) POL: Polyurethane.

g) SIL: Silicone.
h) SILX: Siloxane or silane.
i) VE: Vinyl ester.

2) Second element identifies the substrate using the following abbreviations:
a) C: Concrete or masonry.
b) F: Concrete flooring.
c) FRP: Fiber-reinforced plastic.
d) GM: Galvanized metal.
e) M: Metal.
f) PVC: Polyvinyl chloride, chlorinated polyvinyl chloride.

3) Third element identifies the sequential system number.
a) For example, EPX-C-2 is the second standard epoxy coating system for concrete substrates.

4) Fourth element is optional and identifies the additional substrate or special condition with the following abbreviations:
a) PWS: Potable water service applications (NSF-61 approved).
b) BSC: Biogenic sulfide corrosion-resistant applications in wastewater.
c) BG: Below grade or buried.
d) OZ: Organic zinc primer, epoxy polyurethane system.
e) SC: Secondary containment.

2.04 PRODUCTS FOR COATING SYSTEMS

A. Products: As specified in Attachment B - Coating Detail Sheets.

B. Cleaning solvents:
1. Requirements for solvent wash, solvent wipe, or cleaner used, including, but not limited to, those used for surface preparation in accordance with SSPC-SP 1:
a. Emulsifying type.
b. Containing no phosphates.
c. Biodegradable.
d. Does not damage zinc.
e. Compatible with the specified primer.
f. Complying with applicable air-quality control board requirements.
2. Use clean white cloths and clean fluids in solvent cleaning.

PART 3 EXECUTION

3.01 GENERAL PROTECTION REQUIREMENTS

A. Protect adjacent coated surfaces from coatings and damage associated with coating work. Repair damage resulting from inadequate or unsuitable protection.

B. Use drop cloths and other coverings to protect adjacent surfaces not to be coated against spatter and droppings.

C. Mask off surfaces of items not to be coated or remove items from area.

D. Furnish and deploy sufficient drop cloths, shields, and protective equipment to prevent spray or droppings from fouling surfaces not being coated and, in particular, surfaces within storage and preparation areas.

E. Place coating waste, cloths, and material that may pose a fire hazard in closed metal containers and remove daily from site.

F. Remove electrical plates, surface hardware, fittings, and fasteners before coating application. Carefully store, clean, and replace items after completing coating in each area. Do not use solvent or degreasers to clean hardware that may remove permanent lacquer finishes.

G. Erect and maintain protective enclosures in accordance with SSPC-Guide 6.

H. Protect the following surfaces from abrasive blasting by masking or by other means:
   1. Threaded portions of valve and gate stems, grease fittings, and identification plates.
   2. Machined surfaces for sliding contact.
   3. Surfaces to be assembled against gaskets.
   4. Surfaces of shafting where sprockets will be fit.
   5. Surfaces of shafting where bearings will be fit.
   6. Machined bronze surfaces, including slide gates.
   7. Cadmium-plated items, except cadmium-plated, zinc-plated, or sherardized fasteners used to assemble equipment requiring abrasive blasting.
   8. Galvanized items, unless scheduled to be coated.

I. Protect installed equipment, mechanical drives, and adjacent coated equipment from abrasive blasting to prevent damage caused by spent abrasive blast media, dust, or dirt entering such equipment.

J. Schedule cleaning and coating to keep dust and spray from the cleaning process from falling on wet, newly coated surfaces.
   1. Whenever possible, coordinate with other trades and complete surface preparation and coating work before installing hardware, hardware accessories, nameplates, data tags, electrical fixtures, and similar uncoated items that will be in contact with coated surfaces. Mask machined surfaces, sprinkler heads, and other small items that will not be coated.
   2. After completing coating, reinstall removed items.
   3. Disconnect and move equipment adjacent to walls to clean and coat equipment and walls. Replace and reconnect equipment after coating.

3.02 GENERAL SURFACE PREPARATION REQUIREMENTS

A. Prepare surfaces in accordance with CSM's instructions unless more stringent requirements are specified in this Section.

B. Coating detail sheets in Attachment B - Coating Detail Sheets include additional surface preparation requirements.

C. Follow more stringent requirement if information conflicts.

D. Where required by the Owner's representative, a NACE International certified coatings inspector, provided by the Engineer, will inspect and approve surfaces to be coated before applying a coating.
   1. CSA shall coordinate coating inspections.
      a. Identify coating inspection Hold Points during the pre-installation conference.
      b. Provide at least 2 days' notice before inspection.
   2. Contractor shall correct surface defects identified by the inspector at no additional cost to Owner.

3.03 MECHANICAL AND ELECTRICAL EQUIPMENT PREPARATION

A. Remove grilles, covers, and access panels for mechanical and electrical system and coat separately.

B. Prepare and finish coat equipment primed by the manufacturer using specified intermediate and top coats, as applicable, and color selected by the Owner.

C. Prepare, prime, and coat both insulated and bare pipes, conduits, boxes, insulated and bare ducts, hangers, brackets, collars, and supports, except where items are covered with material not requiring coating, or with a prefinished coating.

D. Replace identification markings on mechanical or electrical equipment when coated over or spattered.

E. Prepare and coat interior surfaces of air ducts and convector and baseboard heating cabinets visible through grilles and louvers with 1 coat of flat black paint to limit of sight line.

F. Prepare and coat dampers exposed immediately behind louvers, grilles, and convector and baseboard heating cabinets to match face panels.

G. Prepare and coat exposed conduit and appurtenances occurring in finished areas with color and texture to match adjacent surfaces.

H. Prepare and coat sides' front, back, and edges of plywood backboards for electrical equipment before installing backboards and mounting equipment on them.

I. Color code equipment, piping, conduit, and exposed ductwork and apply color banding and identification, such as flow arrows, naming, and numbering, in accordance with the Contract Documents.

3.04 CLEANING OF NEW AND PREVIOUSLY COATED OR NEW SURFACES

A. Utilize cleaning agent to remove soluble salts, such as chlorides, from concrete and metal surfaces:
   1. Cleaning agent: Biodegradable non-flammable and containing no VOC.
   2. Manufacturers: The following or equal:
      a. CHLOR*RID International, Inc.
         1) Complete soluble salt removal with steam or warm water cleaning.
   3. Steam clean and degrease surfaces to be coated to remove oils and grease.

4. Test cleaned surfaces to ensure removal of soluble salts. Carry out additional cleaning as needed.
5. Complete final surface preparation before applying new coating system in strict accordance with CSM's printed instructions.

3.05 BLAST CLEANING

A. Surface preparation requirements:
   1. Do not reuse spent blast abrasive.
   2. Ensure that filter compressed air used for blast cleaning is free of condensed water and oil. Clean moisture traps at least once every 4 hours or more frequently, as required, to prevent moisture from entering the abrasive blasting equipment air supply. Check blast air for moisture and oil after each cleaning in accordance with ASTM D4285.
   3. Install oil separators just downstream of compressor discharge valves and at the discharge point of blast pot discharges. Check separators on the same frequency as the moisture traps.
   4. Keep regulators, gauges, filters, and separators on compressor air lines to blasting nozzles operational at all times.
   5. Install an air dryer or desiccant filter drying unit to dry the compressed air before blast pot connections. Use and maintain the dryer throughout surface preparation work.
   6. Use a venturi-type, or other high velocity-type, abrasive blast nozzles supplied with at least 100 pounds per square inch gauge air pressure at the nozzle and enough volume to obtain appropriate blast cleaning production rates and surface cleanliness.
   7. Provide airborne particulate evacuation and filtering that meets OSHA safety standards. Maintain optimal visibility both to clean and provide the specified surface profile and to allow inspection of the substrate during surface preparation work.
   8. If prepared and cleaned metallic substrates become contaminated between final surface preparation work and coating system application, or if the prepared substrate darkens or changes color, re-clean by water blasting, or abrasive blast cleaning as appropriate until the specified degree of cleanliness is restored.

B. Water jetting or water blasting:
   1. Use water jetting or water blasting for recoating or relining where an adequate surface profile exists.
   2. Perform water jetting or water blasting in accordance with SSPC-SP 13 and SSPC-WJ-1, WJ-2, WJ-3, WJ-4.

3.06 PREPARATION REQUIREMENTS FOR CONCRETE SURFACES

A. Cure for at least 28 days before coating.

B. Remove degraded concrete using abrasive blast cleaning or high or ultra-high-pressure water jetting, chipping, or other abrading tools until achieving a sound, clean substrate. Remove all bruised or cracked concrete.

C. Prepare substrate cracks and areas requiring resurfacing; perform detail treatment, including, but not limited to, terminating edges per the CSM's recommendations and as indicated on the Drawings.
   1. Prepare concrete surfaces in accordance with SSPC-SP 13.

D. Prepare concrete surfaces in accordance with SSPC-SP 13.
   1. Inspect concrete surfaces to select appropriate surface preparation method to provide a suitable substrate for the specified coating system.
   2. Use blast cleaning or other means to expose the complete perimeter of air voids or bug holes. Do not leave shelled over, hidden air voids beneath the exposed concrete surface.
   3. Repair concrete defects and physical damage.
   4. Clean concrete surfaces of dust, mortar, formwork, fins, loose concrete particles, form release materials, oil, and grease.
   5. Fill voids to provide surface as as required by coating system manufacturer.

E. Provide clean substrate visually free of calcium sulfate, loose, coarse, or fine aggregate, laitance, loose hydrated cement paste, and otherwise harmful substances.
   1. Confirm concrete surface minimum pH of 9.0 with surface pH testing.
   2. If after surface preparation the surface pH remains below 9.0, perform additional water blasting, cleaning, or abrasive blast cleaning until additional pH testing indicates an acceptable pH level.

F. Prepare concrete surface for coating in accordance with SSPC-SP 13.
   1. Provide ICRI 310.2 minimum No. 3 concrete surface profile (CSP) or as specified on Coating Detail Sheets.
   2. Evaluate profile of the prepared concrete using ICRI 310.2 surface profile replicas.

G. Blast clean cementitious repair mortars or grouts to the same profile and degree of cleanliness requirements required for concrete substrates.

H. Blast clean polymer-based surfacers or waterborne modified cementitious surfaces only if they have exceeded the CSM's recommended recoat time.

I. Vacuum all concrete surfaces before coating application, leaving a dust free, sound concrete substrate.
   1. Thoroughly clean concrete surfaces to be coated to remove loose dirt and spent abrasive.
   2. Remove debris produced by blast cleaning from the structures to be coated, and legally dispose of it off-site.

J. Test moisture content of concrete to be coated:
   1. Conduct ASTM D4263 plastic sheet test at least once for every 500 square feet of surface area to be coated.
      a. Any moisture on plastic sheet after test period constitutes a non-acceptable test, and the concrete must be dried further.
   2. Conduct ASTM F1869 test at least once for every 1,000 square feet of concrete floor surface area to be coated.

3. Conduct ASTM F2170 one relative humidity moisture test at least once for each 500 square feet of non-floor concrete surface area where the opposite side is exposed to soil or water.
4. Comply with specified minimum moisture content and CSM's written recommendations for moisture vapor transmission rates or relative humidity values.

K. Masonry surfaces:
1. Cure for at least 28 days before coating.
2. Prepare masonry surfaces to remove chalk, laitance, loose dirt, dried mortar splatter, dust, peeling, or loose existing coatings, or otherwise deleterious substances to leave a clean, sound substrate.
3. Wash and scrub masonry surfaces with clear water. Do not use muriatic acid.
4. Seal or fill masonry surfaces with a sealer or block filler compatible with the specified primer after cleaning.
5. Confirm that masonry surfaces are dry before coating application.
a. If using pressure washing or low-pressure water blast cleaning for preparation, allow the masonry to dry for at least 5 days under dry weather conditions or until the minimum ambient temperature is 70 degrees Fahrenheit before coating.

3.07 GENERAL PREPARATION REQUIREMENTS FOR METALLIC SURFACES

A. Remove rust, scale, and welding slag and spatter.
1. Remove and grind smooth all excessive weld material and weld spatter on metal surfaces before blast cleaning in accordance with NACE SP0178, Appendix C, Level C.
2. Grind sharp edges on metal substrate to approximately 1/16-inch radius before abrasive blast cleaning.

B. Prepare metallic surfaces in accordance with applicable portions of surface preparation specifications of the SSPC specified for each coating system.
1. Remove grease and oil in accordance with SSPC-SP 1.
2. Use solvent as recommended by the CSM.
3. Measure profile depth of the surface to be coated in accordance with Method C of ASTM D4417. Contractor shall select blast particle size and gradation to produce the specified surface profile.
4. Constantly monitor and maintain ambient environmental conditions to ensure cleanliness and that no "rust back" occurs before coating material application.

C. Prepare metallic surfaces by blast cleaning in accordance with SSPC-VIS 1 (ASTM D2200). Prepare abrasive blast representative areas for the Owner's representative to inspect on the first day of cleaning.

D. Unless otherwise specified, the requirements for blast cleaning steel, ductile iron, and stainless steel substrates are as follows:
1. Ferrous metal surfaces not to be submerged: Abrasive blast in accordance with SSPC-SP 10 unless blasting may damage adjacent surfaces, is prohibited, or is specified otherwise. Where abrasive blasting is not possible, clean surfaces to bare metal with power tools in accordance with SSPC-SP 11.

2. Ferrous metal surfaces to be submerged: Abrasive blast in accordance with SSPC-SP 5, unless specified otherwise, to clean and provide roughened surface profile with a depth between 2 and 4 mils.
3. Remove traces of grit, dust, dirt, rust scale, friable material, loose corrosion products, or embedded abrasive from substrate before coating application.
4. When abrasive blasted surfaces rust or discolor before coating, abrasive blast clean surfaces again.

E. Field preparation of shop-primed surfaces:
1. Smooth welds and prominences with power tools before applying field-applied coatings.
2. Clean and dry shop-primed ferrous metal surfaces and fabricated assemblies before applying field coats.
3. Prepare shop epoxy primed surfaces with light abrasive blasting or abrading and then vacuum before applying finish coats.
   a. Follow CSM instructions for surface preparation when the primer recoat limit has been exceeded.
4. Non-immersion service: Clean in accordance with SSPC-SP 2 (Hand Tool Cleaning) or SSPC-SP 3 (Power Tool Cleaning) and uniformly roughen.
5. Immersion, BSC, and SC service: Remove shop primer in accordance with SSPC-SP 5 (Near-White Blast Cleaning).

F. Damaged shop primer or rust bleeding:
1. Ferrous metals: Clean in accordance with SSPC-SP 1 (Solvent Cleaning) and spot blast in accordance with SSPC-SP 10 (Near-White Metal Blast Cleaning) to achieve a uniform surface profile between 2.0 and 2.5 mils before recoating.
2. Reject galvanized steel with rust bleeding.

G. Damaged coating: Repair by abrasive blast cleaning surfaces as specified for the coating system; feather to a smooth transition before touching up.

3.08 PREPARATION REQUIREMENTS BY SURFACE TYPE

A. Galvanized steel and non-ferrous metal surfaces:
1. Degrease or solvent clean (SSPC-SP 1) to remove oily residue.
2. Abrasive blast clean in accordance with SSPC-SP 16.
   a. If abrasive blast cannot be performed, abrade in accordance with SSPC-SP 3 (Power Tool Cleaning).
3. Apply metal pretreatment within 24 hours before coating galvanized surfaces that cannot be thoroughly abraded, such as bolts, nuts, or preformed channels.
4. Test surface for contaminants using copper sulfate solution.

B. Ductile iron pipe and fittings to be lined or coated: Abrasive blast clean in accordance with NAPF 500-03.

C. PVC and FRP surfaces:
1. Lightly sand surfaces to be coated.
   a. Sand to remove gloss and establish uniform surface profile.
2. Vacuum to remove loose dust, dirt, and other materials.
3. Solvent clean with clean white rags and allow solvent to evaporate completely before applying coating materials.

3.09 APPLICATION REQUIREMENTS

A. Apply coatings in accordance with manufacturer's instructions.

B. Empty aboveground piping to be coated of contents when applying coatings.

C. Mechanical equipment shop primed by the manufacturer.
   1. Pumps and valves: Shop coat with manufacturer's highest quality coating system meeting the project specifications.
      a. Contractor shall provide CTR shop coating reports.
   2. Non-immersed equipment: Touch up shop primer, and coat in the field with specified coating system after installation.
      a. If project requires equipment removal and reinstallation, complete touch-up coating after final installation.
   3. Immersed equipment not shop coated: Remove shop primer before surface preparation and field apply coating.

D. Verify surface preparation immediately before applying coating in accordance with SSPC-SP COM and the SSPC visual standard for the specified surface preparation method.

E. Allow surfaces to dry, except where coating manufacturer requires surface wetting before coating.

F. Wash coat and prime sherardized, aluminum, copper, and bronze surfaces, or prime with manufacturer's recommended special primer.

G. Do not apply coatings to a surface until it has been prepared as specified.

H. Use equipment designed to apply materials specified.
   1. Use compressors with moisture traps and filters that remove water and oils from the air.
      a. Perform a paper blotter test at the Engineer's request to verify air is sufficiently free of oil and moisture. Do not allow the amount of oil and moisture to exceed CSM-recommended amount.
   2. Equip spray equipment with properly sized mechanical agitators, pressure gauges, pressure regulators, and spray nozzles.

I. Where 2 or more coats are required, tint prime coat intermediate coats as necessary to distinguish each coating and to help indicate coverage.
   1. Do not use color additives with chromium, lead or lead compounds that hydrogen sulfide, other corrosive gases, might destroy or alter. Apply the specified number of coats.

J. Apply coating by brush, roller, trowel, or spray unless a specific application method is required by coating manufacturer's instructions or these Specifications.
   1. Apply primer or first coat by brush to power tool cleaned ferrous surfaces.
   2. Brush or spray-apply coats for blast-cleaned ferrous surfaces and subsequent coats for non-blast cleaned ferrous surfaces.
   3. After prime coat dries, mark, repair, and retest pinholes and holidays before intermediate or top coats are applied.

K. Spray application:
   1. With a brush, stripe coat edges, welds, corners, nuts, bolts, and difficult-to-reach areas, as necessary, before spray application to ensure specified coating thickness along edges.
   2. When using spray application, apply each coat to thickness no greater than recommended in coating manufacturer's instructions.
   3. Use airless spray method unless air spray method is required by CSM's instruction or these Specifications.
   4. Conduct spray coating under controlled conditions. Protect adjacent construction and property from coating mist, fumes, or overspray.

L. Lightly sand and thoroughly clean surfaces to receive high-gloss finishes unless CSM instructs otherwise.

M. Remove all dust on coatings between coats.

N. Shop and field coats:
   1. Prime coat: Shop-apply or field-apply prime coats as specified. Use shop-applied primer compatible with the specified field coating system and apply at the minimum dry film thickness recommended by the finish coat CSM.
      a. Provide data sheets identifying the shop primer to on-site coating application personnel.
      b. Perform adhesion tests on the shop primer.
      c. Remove and recoat damaged, deteriorated, and poorly applied shop coatings.
      d. If shop primer coat meets this Section's requirements, spot prime exposed metal of shop-primed surfaces before spray applying primer over the entire surface.
   2. Field coats: Apply field coats with 1 or more prime coats and finish coats to build up coating to dry film thickness specified for the coating system.
      a. Do not apply finish coats until other work in the area is complete and previous coats are inspected.
   3. Adhesion confirmation: Perform adhesion tests after proper coating cure in accordance with ASTM D3359. Demonstrate that:
      a. Prime coat adheres to the substrate.
      b. Coatings adhere to the prime and intermediate coats.
         1) Coating 5 mils or more DFT: Achieve adhesion test result of 5A on immersed surfaces and 4A or better on other surfaces.
         2) Coating less than 5 mils DFT: Achieve adhesion test results of 5B on immersed surfaces and 4B or better on other surfaces.

O. Brush, roll, trowel, or spray and back roll coats for concrete and masonry.

P. Plural component coating application:
   1. Premix contents of component drums if required by the CSM each day.
   2. Before starting application:
      a. Verify gauges are working properly.
      b. Complete ratio checks.
      c. Sample the mix on plastic sheeting to ensure set time is appropriate and complete.
      d. Label and retain all spray samples. Submit to Engineer when requested.

Q. Drying and recoating:
   1. Provide fans, heating devices, or other means to prevent condensate or dew on substrate surface or between coats and during curing after applying the last coat.
   2. Allow each coat to cure or dry thoroughly, in accordance with if required in CSM's printed instructions, before recoating.
   3. Use CSM's printed instructions and the requirements specified in this Section to determine minimum required drying time.
      a. Do not allow excessive drying time or exposure, which may impair bond between coats.
      b. Recoat all coatings within time limits recommended by CSM.
      c. If time limits are exceeded, abrasive blast clean and de-gloss clean before applying another coat.
   4. If limitations on time between abrasive blasting and coating are not met before attaching components to surfaces that cannot be abrasive blasted, coat components before attachment.
   5. Ensure primer and intermediate coats of coating are unscarred and completely integral when applying each succeeding coat.
   6. Touch up suction spots between coats and apply additional coats where required to produce finished surface of solid, even color, free of defects.
   7. Leave no holidays. Repair all holidays in accordance with the requirements on pertinent Coating Detail Sheets or as recommended by the CSM.
   8. Sand and feather into a smooth transition and recoat scratched, contaminated, or otherwise damaged coating surfaces so repairs are invisible to the naked eye.
   9. For submerged service or highly corrosive headspace service, provide a letter to the Engineer stating that the lining system is fully cured and ready to be placed into service.

R. Workmanship:
   1. Ensure that coated surfaces are free from runs, drips, ridges, waves, laps, and brush marks. Coats shall be applied to produce a smooth, even film of uniform thickness completely coating corners and crevices.
   2. Coat surfaces without drops, overspray, dry spray, excessive runs, ridges, waves, holidays, laps, or brush marks.
   3. Remove splatter and droppings after coating work is completed.
   4. Evenly apply each coat of material and sharply cut to a line created with masking tape or other suitable materials.
   5. Avoid over spraying or spattering paint on surfaces not to be coated. Protect glass, hardware, floors, roofs, vehicles, and other adjacent areas and installations by taping, drop cloths, or other suitable measures.
   6. When coating complex steel shapes, stripe coat welds, edges of structural steel shapes, metal cut-outs, pits in steel surfaces, or rough surfaces with the primer before overall coating system application.
      a. Brush apply stripe coat to ensure proper coverage.
      b. Do not stripe coat with spray or roller.
   7. Ensure that finish coat, including repairs, has a uniform color and gloss.

S. Coating properties, mixing, and thinning:
   1. Thin prime coat and apply as recommended by the CSM. Thinned coating must comply with prevailing air pollution control regulations.

2. If maximum recoat time is exceeded, prepare surface with solvent washing, light abrasive blasting, or other procedures per CSM's instructions.
3. Allow adequate drying time between coats as instructed by the CSM, adjusted as necessary for the site conditions.
4. Ensure that coatings, when applied, provide a satisfactory film and a smooth even surface. Lightly sand glossy undercoats to provide a surface suitable for proper application and adhesion of subsequent coats. Thoroughly stir and strain coating materials during application and maintain uniform consistency.
5. Mix coatings with 2 or more components in accordance with CSM's instructions.
6. Where necessary to suit conditions of the surface, temperature, weather, and method of application, thin the coating per CSM's recommendations.
    a. Ensure that volatile organic content (VOC) of the thinned coating complies with prevailing air pollution control regulations.
    b. Thin coatings to only what is necessary to obtain proper application characteristics.
    c. Use a thinner recommended by the CSM.

T. Film thickness and continuity:
1. Apply coating to the specified thicknesses.
    a. Apply additional coats when necessary to achieve specified thicknesses, especially at edges and corners.
2. Verify WFT of the coating system first coat and after applying each subsequent coat.
3. Do not allow the minimum thickness at any point to deviate more than 25 percent from the required average.
4. Do not allow the surface area covered per gallon of coating for various types of surfaces to exceed those recommended by the CSM.
    a. Provide coating coverage worksheets listing the maximum and minimum coverage for each unit volume of coating for concrete surfaces.
5. Apply additional coats to achieve the specified dry film thickness if brush or roller application methods cannot achieve the specified film thicknesses per coat.

U. Protecting coated surfaces:
1. Do not handle, work on, or otherwise disturb coated items until the coating is completely dry and hard.
2. After installation, recoat shop-coated surfaces with specified coating system as necessary to match surrounding surfaces, and to coordinate with the specified color identification requirements.

V. Special requirements:
1. Before erection, apply all but the final finish coat to interior surfaces of roof plates, roof rafters and supports, pipe hangers, piping in contact with hangers, and contact surfaces inaccessible after assembly. Apply final coat after erection.
2. Coat structural slip-critical connections and high strength bolts and nuts after erection.
3. Areas damaged during erection:
    a. Prepare surface for spot repairs as specified for the coating system.
    b. Recoat with prime coat before applying subsequent coats.

c. Touch up surfaces after installation.
d. Clean and dry surfaces to be coated at time of application.

4. Coat underside of equipment bases and supports not galvanized with at least 2 coats of primer specified before setting the equipment in place.
5. Coat aluminum in contact with concrete.

3.10 APPLICATION REQUIREMENTS FOR CONCRETE COATING SYSTEMS

A. Apply filler/surfacer as recommended by CSM to fill bug holes and air voids in concrete or block texture in CMU, leaving a uniformly filled surface that does not produce blowholes or outgassing causing the coating system to pinhole.
   1. Allow filler/surfacers to cure sufficiently before applying prime coat as required by the CSM. Use the CSM-recommended drying time between coats.

B. Apply surfacer or filler and let dry before coating application.
   1. Use the drying time between filler/surfacer and coating system specified by the CSM for the site conditions.
      a. Let concrete substrate dry before applying filler/surfacers or coating system materials.
   2. If the maximum recoat time is exceeded, prepare surfaces by solvent washing, light abrasive blasting, and other procedures per CSM's instructions.
   3. Apply a complete parge coat of the specified filler/surfacer material over the entire substrate before applying the coating system.
      a. Scrub filler/surfacer into the substrate to completely fill open air voids and bug holes.
      b. Completely cover the substrate, unless otherwise specified, above such filled voids by 1/8 inch of thickness.
      c. Provide relatively flat, uniformly even surface before coating application.
   4. Secondary containment: Place surfacer or filler 1/16 inch thick above concrete plane to create a monolithic surface free of pinholes.
      a. Floor surfaces: Broadcast with aggregate to create a non-slip surface texture.
      b. Remove excess aggregates and apply base coat to encapsulate embedded non-slip aggregate.

C. Concrete substrate temperatures:
   1. Apply filler/surfacers and the coating system when temperatures are falling, typically late afternoon or evening.
      a. Do not coat concrete with rising concrete substrate surface temperatures or substrates in direct sunlight, to minimize outgassing from the substrate and formation of pinholes, and/or blistering.
   2. Should bubbles, pinholes, or other discontinuities form in the applied coating system material, they shall be repaired.
      a. Should discontinuities develop in the filler/surfacer material or in the first coat of the coating material, repair them before the next coat.
      b. When discontinuities occur, open the air void behind or beneath the discontinuities and completely fill with specified coating material. Then, abrade the coated area around the discontinuities repair reapply coating over that area.

D. Perform application detail work in accordance with these Specifications, the CSM's current written recommendations, and drawings, whichever is stricter.

E. Concrete coating systems application requirements:
   1. Concrete coating minimum dry film thickness excludes parge coat, block filler, and sealer.

3.11 COATING SYSTEM SCHEDULE

A. Attachment A - Schedule of Surfaces to be Field Coated specifies surfaces to be coated in the field with the coating systems required. In general, apply coatings to steel, iron, polyethylene, and galvanized surfaces unless specified or otherwise indicated on the Drawings. Verify questionable surfaces.

B. Ductile iron:
   1. High solids epoxy and polyurethane system:
      a. Interior and exterior non-immersed ferrous metal surfaces including:
         1) Pipe, valves, valve operators, and pipe supports.

C. Polyethylene:
   1. Carbon black and/or UV stabilizer as recommended by the manufacturer:
      a. Exterior non-immersed HDPE surfaces.

3.12 SURFACES NOT REQUIRING COATING

A. Stainless steel piping, valves, pipe supports, instrument sunshades.

B. Sliding surfaces on expansion joints, motor and pump shafts, machined surfaces at bearings and seals, grease fittings, etc.

C. Galvanized structural steel framing, galvanized roof decking, galvanized pipe supports.

D. Copper and brass pipe, fittings, valves, etc.

E. Bronze valves, bearings, bushings, and fasteners.

F. Corrosion resistant special alloys: Inconel, Alloy 20, Hastelloy, etc.

G. Exterior Concrete.

H. Plastic surfaces except coat PVC, CPVC, and other plastic piping system exposed to sunlight.

I. Buried Piping that is encased in concrete or cement mortar.

3.13 QUALITY CONTROL

A. Owner-provided inspection or inspection by others does not limit the Contractor's or CSA's responsibilities for quality workmanship or quality control as specified or as required by the CSM's instructions. Owner inspection is in addition to any inspection required of the Contractor.

B. Owner may perform, or contract with an inspection agency to perform, quality control inspection and testing of the coating work covered by this Section. These inspections may include the following:
   1. Inspect materials upon receipt to ensure that the CSM supplied them.
   2. Verify that specified storage conditions for the coating system materials, solvents, and abrasives are provided.
   3. Inspect and record findings for substrate cleanliness.
   4. Inspect and record pH of concrete and metal substrates.
   5. Inspect and record substrate profile (anchor pattern).
   6. Measure and record ambient air and substrate temperature.
   7. Measure and record relative humidity.
   8. Check for substrate moisture in concrete.
   9. Verify that mixing of coating system materials is in accordance with CSM's instructions.
   10. Inspect, confirm, and record that coating system materials' "pot life" is not exceeded during installation. Inspect to verify that recoat limitations for coating materials are not exceeded.
   11. Perform adhesion testing.
   12. Measure and record the coating system's thickness.
   13. Verify proper curing of the coating system in accordance with the CSM's instructions.
   14. Holiday or continuity testing in accordance with NACE SP0188 for coatings that will be immersed or exposed to aggressively corrosive conditions.

C. Contractor shall perform holiday testing in accordance with NACE SP0188 to identify holidays or pinholes needing repair for coating over 100 percent of surfaces:
   1. Coated steel that will be immersed or exposed to aggressively corrosive conditions.
   2. Coated concrete.
   3. Perform holiday tests after proper application and coating system cure.

3.14 CORRECTIVE MEASURES

A. Repair pinholes or holidays identified by Holiday Testing as follows:
   1. Remove the coating system with a grinder or other suitable power tool.
   2. Remove coating system at all pinholes and holidays at least 2 inches diameter around the defect back to expose substrate.
   3. Concrete voids: chip back to expose entire cavity in all directions.
      a. Completely fill void with approved filler/surfacer material using a putty knife or other suitable tool and strike off. Cure per CSM's recommendations.
   4. Aggressively abrade or sand the intact coating system surface at least 3 inches beyond the removal area in all directions to produce a uniform 6- to 8-mil profile in the intact coating system.
   5. Vacuum the prepared area to remove all dust, dirt, etc., leaving clean, sound surfaces.
   6. Tape to mask the periphery of the prepared intact coating area to prevent coating repair application onto the prepared area.

7. Apply the coating system with enough coats to achieve the specified finish coat thickness over the defect and coating removal area. Feather the coating onto the abraded coated surfaces around the removal area to avoid a lip and to achieve a neat repair outline.
8. Follow curing time between coats as specified by CSM for the site conditions. Solvent wash and abrasive blast per CSM's instructions, if the maximum recoat time is exceeded.
9. Apply coating at specified dry film thickness.

3.15 CLEANUP

A. Remove surplus materials, protective coverings, and accumulated rubbish after completing coating. Thoroughly clean surfaces and repair overspray or other coating-related damage.

3.16 FINAL INSPECTION

A. Conduct final inspection of coating system work to determine whether it meets specifications requirements.

B. Conduct subsequent final inspection with Engineer to ensure work conforms to contract documents requirements.

C. Mark any rework required.
1. Re-clean and repair, as specified, at no additional cost to the Owner.

END OF SECTION

ATTACHMENT A - SCHEDULE OF SURFACES TO BE COATED

APPENDIX A
Schedule of Surfaces to be Coated

A. The following schedule is incomplete. Coat unlisted surfaces with same coating system as similar listed surfaces. Contact Engineer for clarification.

EPU-M-1	Metals, exterior, non-immersed
Notes:	
1: Non-immersed ferrous metal surfaces include: a. Pipe, valves, pipe hangers, supports and saddles. c. Valve and gate operators and stands. 2: Immersed ferrous metal surfaces include: a. Not used.	

ATTACHMENT B - COATING DETAIL SHEET

Appendix B			
Coating Detail Sheet			
Coating System	EPU-M-1		
Coating Material	Two coats epoxy with polyurethane finish coat		
Substrate	Metal		
Products: One of the following or equal:	Primer	Intermediate Coat	Finish Coat
Carboline	Carboguard 890	Carboguard 890	Carbothane 134 VOC
International Paint	Devran 224V	Devran 224V	Devthane 379
PPG	Amercoat 385	Amercoat 385	Amercoat 450H
Sherwin Williams	Macropoxy 646	Macropoxy 646	Hi Solids Polyurethane
Tnemec	Series 69	Series 69	Series 1095
Service Condition	Interior or Exterior, subject to direct sunlight. Non-immersion.		
Surface Preparation			
General	Prepare surfaces as specified in this Section and as follows.		
Ferrous Metal	Bare surfaces: SSPC-SP10, Near-White Blast Cleaning. Shop primed surfaces: SSPC-SP2, Hand Tool Cleaning or SSPC-SP3, Power Tool Cleaning. Damaged primer or rust: SSPC-SP10, Near White Blast Cleaning and spot prime.		
Nonferrous Metal	SSPC-SP16, Brush Blast Cleaning.		
Galvanized Metal	SSPC-SP16, Brush Blast Cleaning. Test for surface contaminants.		
Surface profile			
Ferrous Metal	2.5 to 3.0 mils		
Nonferrous Metal	1.5 to 2.0 mils		
Galvanized Metal	1.5 to 2.0 mils		
System Thickness (Dry Film)			
Total	10 to 13 mils		
Primer	4 to 5 mils		
Intermediate Coat	4 to 5 mils		
Finish Coat	2 to 3 mils		
Application			
Special CTR Training	Not required.		

SECTION 11395A

PACKAGED ODOR SCRUBBING SYSTEM

PART 1 GENERAL

1.01 SUMMARY

A. Section includes:
   1. Package odor scrubber system components requiring rehabilitation as recommended by the original equipment manufacturer (OEM).

1.02 REFERENCES

A. American Society of Mechanical Engineers (ASME):
   1. B16.5 - Pipe Flanges and Flanged Fittings: NPS 1/2 through NPS 24 inch Standard.
   2. B73.1 - Specification for Horizontal End Suction Centrifugal Pumps for Chemical Process.
   3. RTP-1 - Reinforced Thermoset Plastic Corrosion Resistant Equipment.

B. ASTM International (ASTM):
   1. D746 - Standard Test Method for Brittleness Temperature of Plastics and Elastomers by Impact.
   2. D1998 - Standard Specification for Polyethylene Upright Storage Tanks.
   3. D3299 - Standard Specification for Filament-Wound Glass-Fiber-Reinforced Thermoset Resin Chemical-Resistant Tanks.

C. National Electrical Code (NEC).

D. National Electrical Manufacturers Association (NEMA):
   1. 250 - Enclosures for Electrical Equipment (1000 V Maximum).

E. National Fire Protection Association (NFPA):
   1. 820 - Standard for Fire Protection in Wastewater Treatment and Collection Facilities.

F. Underwriters Laboratories, Inc. (UL):
   1. 508 - Standard for Industrial Control Equipment.
   2. 508A - Standard for Industrial Control Panels.
   3. 698A – Standard for Industrial Control Panels Relating to Hazardous (Classified) Locations.
   4. 1283 - Standard for Electromagnetic Interference Filters.
   5. 1449 - Surge Protective Devices.

1.03 SUBMITTALS

A. Submit as specified in Section 01330 - Submittal Procedures.

B. Product data:
   1. Bill of materials and catalog data on all equipment, internals, instrumentation, controllers, relays, pressure switches, transfer switches, and such other accessories as are needed to properly operate the scrubber and the control or metering system.
   2. For fiber reinforced thermoset plastic resin construction provide details on construction including for every layer the thickness, specific resins used, additives used, catalysts used, type of glass mat or fiber used, layup technique and the details and technique for reinforcing openings.
   3. For connections to fiber reinforced thermoset plastic resin or plastic vessel, provide details of the connection type, flanges, backing, bolting, and corrosion protection provided.

C. Commissioning submittals:
   1. Provide Manufacturer's Certificate of Source Testing as specified in Section 01756 - Commissioning.

D. Provide Manufacturer's Certificate of Installation and Functionality Compliance as specified in Section 01756 - Commissioning.

E. Project closeout documents:
   1. Provide vendor operation and maintenance manual as specified in Section 01782 - Operating and Maintenance Manuals.

1.04 WARRANTY

A. Provide warranty as specified.

PART 2 PRODUCTS

2.01 MANUFACTURERS

A. Original Equipment Manufacturer: BioRem.
   1. Equipment Model: Mytilus 9-1.

2.02 DESIGN CRITERIA (NOT USED)

2.03 PERFORMANCE CRITERIA (NOT USED)SCRUBBER VESSELS (NOT USED)

2.04 SCRUBBER COMPONENTS

A. General:
   1. Contractor to contact OEM to perform general equipment inspection services, and perform any recommended rehabilitation including replacement of the existing media.

2.05 INSTRUMENTATION AND CONTROLS (NOT USED)

2.06 PACKAGE CONTROL SYSTEM (NOT USED)

2.07 CONTROL REQUIREMENTS (NOT USED)

2.08 VALVES, FITTINGS AND CONNECTIONS

A. Material:
   1. Polyvinyl chloride, Schedule 80 minimum for piping components.
   2. Titanium for metals in contact with chemical or scrubbing solution.
   3. Type 316 stainless steel for flange bolts not in contact with chemicals.

B. Valves:
   1. Polyvinyl chloride body diaphragm type with PTFE over EPDM diaphragms.
   2. Provide hypalon gaskets and O-rings; gaskets 0.125-inch thickness minimum.
   3. Flanged or union for easy removal or replacement.

C. Cleaning: Provide connections to circulate dilute muriatic acid to the scrubber stages for de-scaling the packing; provide permanently installed valves with blind flange on exposed side for these connections.

2.09 SCRUBBER FAN

A. Contractor to contact OEM to perform general equipment inspection services and replace scrubber fan or modify belt and pulley system to accommodate new total airflow of 1350 cubic feet per minute, if OEM deems necessary.

2.10 SCRUBBER RECIRCULATION PUMP

A. Contractor to replace existing scrubber recirculation pump per OEM's recommendation based on equipment inspection.

2.11 CHEMICAL METERING PUMPS (NOT USED)

2.12 WATER SOFTENER (NOT USED)

2.13 ANCHOR BOLTS (NOT USED)

2.14 FINISHES (NOT USED)

PART 3 EXECUTION

3.01 SYSTEM BALANCING AND CHECKING

A. Calibrate and adjust all instruments necessary for scrubber system operation.

3.02 COMMISSIONING

A. As specified in Section 01756 - Commissioning and this Section.

B. Manufacturer services:
   1. Provide certificates:
      a. Manufacturer's Certificate of Source Testing.
      b. Manufacturer's Certificate of Installation and Functionality Compliance.
   2. Process Operational Period:
      a. As required by Owner or Contractor.

END OF SECTION

SECTION 13122

METAL BUILDING SYSTEMS

PART 1 GENERAL

1.01 SUMMARY

A. Section includes:
   1. Prefabricated metal building systems.

1.02 REFERENCES

A. American Concrete Institute (ACI):
   1. 318 - Building Code Requirements for Structural Concrete and Commentary.

B. American Institute of Steel Construction (AISC):
   1. 303 - Code of Standard Practice for Steel Buildings and Bridges.
   2. 360 - Specification for Structural Steel Buildings.

C. American Iron and Steel Institute (AISI):
   1. SG02 - North American Specification for the Design of Cold-Formed Steel Structural Members.

D. ASTM International (ASTM):
   1. A653 - Standard Specification for Steel Sheet, Zinc-Coated (Galvanized) or Zinc-Iron Alloy Coated (Galvannealed) by the Hot-Dip Process.
   2. A792 - Standard Specification for Steel Sheet, 55% Aluminum-Zinc Alloy-Coated by the Hot-Dip Process.
   3. B187 - Standard Specification for Copper, Bus Bar, Rod, and Shapes and General Purpose Rod, Bar, and Shapes.
   4. D1494 - Standard Test Method for Diffuse Light Transmission Factor of Reinforced Plastics Panels.
   5. F959 - Standard Specification for Compressible-Washer-Type Direct Tension Indicators for Use with Structural Fasteners.
   6. F436 - Standard Specification for Hardened Steel Washers.
   7. F3125 - Standard Specification for High Strength Structural Bolts, Steel and Alloy Steel, Heat Treated, 120 ksi and 150 ksi Minimum Tensile Strength.

E. American Welding Society (AWS):
   1. D1.1 - Structural Welding Code - Steel.
   2. D1.3 - Structural Welding Code - Sheet Steel.

F. FM Global (FM).

G. International Accreditation Service (IAS):
   1. AC472 - Accreditation Criteria for Inspection Programs for Manufacturers of Metal Building Systems.

H. Metal Building Manufacturing Association (MBMA):
   1. Metal Building Systems Manual.

I. Occupational Safety and Health Administration (OSHA):
   1. Occupational Safety and Health Standards:
      a. 1910.23 - Guarding floor and wall openings and holes.

J. Research Council on Structural Connections (RCSC):
   1. Specification for Structural Joints Using High Strength Bolts.

K. Society for Protective Coatings (SSPC):
   1. SSPC-SP2 - Hand Tool Cleaning.

L. Steel Door Institute (SDI):
   1. A250.8 - Recommended Specifications for Standard Steel Doors and Frames.

M. Underwriters' Laboratories, Inc. (UL).
   1. 580 - Tests for Uplift Resistance of Roof Assemblies.

1.03 DEFINITIONS

A. Primary framing: An assemblage of beams and columns that support the secondary framing members, and that collects loads to transfer to the building foundation.

B. Secondary framing: Members which directly support roof, wall, or floor surfaces and convey loads to the primary framing.

1.04 SUBMITTALS

A. Product Data:
   1. Manufacturer's installation instructions.
   2. Manufacturer's standard color charts and profiles:
      a. Exterior wall and roof panels.
      b. Interior wall and roof liner panels.
      c. Gutters and downspout trim.
   3. Manufacturer's list of approved clamps that may be used to hang suspended items from roof purlins and details of acceptable methods of attachment to purlins.

B. Shop drawings:
   1. Shop drawings: Catalog cuts; design and erection drawings; and other data needed to clearly describe design, materials, construction details, fasteners, and erection.
      a. Erection drawings shall include building dimensions, required foundation footprint, anchor bolt and base plate settings, bracing, main and secondary framing, and sections and details required to fully describe construction of building.
      b. Indicate quantity, size, grade, embedment, and projection, and location of anchor bolts.

2. Calculations: Submit engineering design calculations for the complete structural system, sealed and signed by a Professional Engineer licensed in the state where the project is located.
    a. Clearly indicate foundation reactions at all columns. Identify all applied loads, load factors, and load combinations used to develop the reactions.
    b. Calculations will be submitted for record information only.
        1) Engineer's review of calculations will be for general conformance to the loading requirements of this Section.
        2) The building manufacturer shall remain fully responsible for the structural design and adequacy of the metal building system.
3. Descriptive data: Submit data for the following items either on the shop drawings or separately: Accessories, each type of flashing, trim closures, caps and similar items, fasteners, doors, roof openings, gutters, and downspouts.

C. Quality control submittals:
1. Building manufacturer:
    a. If requested by the Engineer, submit a record of manufacturer's metal building systems of similar design manufactured and erected in the 5-year period preceding the bid date for this project.
        1) Include date of installation, location of metal building, and name and address of Owner.
    b. Submit evidence of manufacturer's certification under IAS AC472 Accreditation.
        1) Certification must be valid for the facility at which the metal building will be fabricated.
    c. Confirmation of UL 580 wind uplift rating.
2. Erector:
    a. Submit welder qualification certificates.

D. Record documents:
1. 1 set of reproducible "Record Drawings" for the erected structure.
    a. Drawings shall bear the seal and signature of a Professional Engineer, registered in the state where the work is constructed and who provided responsible charge for the design.

E. Closeout submittals: Submit Contract Closeout Submittals as specified in Section 01770 - Closeout Procedures.
1. Operating and Maintenance Information.
2. Warranty.
3. Certificate of Compliance: At the completion of the metal building manufacture, the manufacturer will furnish a letter to the Engineer stating that the work was performed in accordance with the approved construction documents.

1.05 QUALITY ASSURANCE

A. Manufacturer qualifications: Manufacturer shall have been engaged in the design, manufacture, and erection of metal building systems of the type specified for at least 5 years preceding the Bid Date of this Contract.
1. Building manufacturer shall be certified by IAS AC472 Accreditation.
2. The manufacturer's Engineer of Record shall hold current license as a Professional Engineer in the state where the work will be constructed.

B. Erector qualifications: Erectors shall be trained, approved, and certified by the manufacturer prior to Bidding of the Project. Erectors shall demonstrate at least 3 years of experience in successfully erecting metal building systems of the type specified in this Section.

1.06 DELIVERY, STORAGE, AND HANDLING

A. Packing and shipping: Deliver materials and fabrications to the job site in manufacturer's original containers with seals unbroken and labeled with manufacturer's identification and number.

B. Delivery:
   1. Deliver materials dry and undamaged, and store out of contact with ground.
   2. Cover materials with weathertight coverings and keep dry.
   3. Provide good air circulation and protection from surface staining for roof and wall covering sheets.

C. Storage and protection: Store materials in original, unopened containers in compliance with manufacturer's printed instructions.

1.07 WARRANTY

A. Provide warranty as specified.

B. Special warranty:
   1. Provide Owner with warranty that exterior finish system for metal panels shall be guaranteed against blister, peeling, cracking, chipping, or material rust-through for a period of 10 years from the date of Substantial Completion.

PART 2 PRODUCTS

2.01 MANUFACTURERS

A. Buildings: One of the following or equal:
   1. Nucor.
   2. Behlen Building Systems.
   3. Butler Manufacturing Co.
   4. Varco Pruden.

2.02 DESIGN AND PERFORMANCE CRITERIA

A. System:
   1. Design: Furnish metal building with vertical walls, single-slope roof, and with column layout as indicated on the Drawings.
   2. Size:
      a. Furnish metal building of the size and configuration indicated on the Drawings.
      b. Coordinate manufacturer's design dimensions for metal building system components, including columns, with equipment foundations, and details indicated on the Drawings.

3. Roof slope: Use a roof slope of 1 inch vertical in 12 inches horizontal or steeper.
4. Provide building with horizontal and vertical bracing where indicated on the Drawings.
5. Column reactions shall be vertical and horizontal only.
    a. No bending moments shall be transferred at column bases.
6. Building indicated on the Drawings is a roof canopy only.
7. The building roofing system will be listed for a UL 580, Class 90 designation.
8. Openings: Frame openings for doors, windows, louvers, equipment with structural framing to replace panels and secondary framing cut for opening.
    a. Provide curbs to suit roof-mounted equipment compatible with roof sheathing.

B. Performance requirements:
1. General:
    a. Design of the metal building structure and its appurtenances shall conform to the requirements of the IBC, the Metal Building Systems Manual, and the requirements of this Section.
        1) Where the Metal Building Systems Manual conflicts with the requirements of this Section, the more restrictive requirements will govern.
    b. Do not include collateral or auxiliary loads in load combinations where dead loads offset other load effects (for example, uplift due to wind loads).
    c. Hot-rolled structural steel sections or welded-up plate sections: Design in accordance with AISC 360.
    d. Cold-formed steel structural members: Design in accordance with the AISI North American Specification for the Design of Cold-Formed Steel Structural Members.
    e. Anchor bolts:
        1) Design anchor bolts to resist column reactions reported from analysis.
        2) Design anchor bolts in accordance with ACI 318 Chapter 17 for cracked concrete to fail in a ductile manner, yielding the steel section before fracturing the surrounding concrete.
        3) Assume concrete foundation strength, f'c = 4,000 pounds per square inch at 28-days.
2. Loading:
    a. General:
        1) Design building for dead load, live loads, and combinations of loads including unbalanced loads in accordance with the IBC and the MBMA Metal Building Systems Manual, except as modified in this Section.
        2) Reduction in wind, live, or snow loads based on tributary loaded area will not be permitted.
    b . Roof loading requirements:
        1) Live load: Minimum 20 pounds per square foot assumed to act vertically on horizontal projected area of roof.
        2) Ground snow load: Not applicable.
        3) Rain on snow surcharge load: Not applicable.
    a. Collateral loading: Uniform roof load of 5 pounds per square foot assumed to act vertically on horizontal projected area of roof to account for miscellaneous accessories supported from the structure.

1) Collateral loading shall be considered a live load.
2) Design primary and secondary framing to support the additional weight of mechanical equipment such as fans, air conditioners, etc. shown on plans.
a) Mechanical equipment weights are in addition to collateral loading.

b. Wind design criteria: As specified in Section 01850 - Design Criteria.
1) Design roof purlins and structural frames for loads specified, but not less than 40 pounds per square foot uplift on horizontally projected roof area.

c. Seismic design criteria: Not applicable.

5. Deflection limitations:
a. Primary frames:
1) Gravity deflection:
a) Live load deflection: L/240.
b) Snow load deflection: L/240.
c) Total load deflection: L/180.
2) Horizontal drift of rigid frames measured at eave:
a) Seismic drift limitation: Not applicable.
b) Wind drift limitation: H/60.

b. Secondary framing:
1) Gravity deflection:
a) Live load deflection: L/180.
b) Snow load deflection: L/180.
c) Total load deflection: L/150.
2) Horizontal deflection: L/120.

c. Deflection of roof and wall panels: Span/180.
d. Deflection calculations should be based on the wind loads presented in AISC Design Guide 3.
1) Deflection calculations should be based on the unreduced wind loads required in the IBC (50-year reoccurrence intervals).

6. Climatic conditions:
a. Gutters and downspouts: Design for a rainfall rate of 5 inches per hour.
b. Temperature: Provide for movement (expansion or contraction) caused by a range of ambient temperature of 120 degrees Fahrenheit without detrimental effects.

2.03 MATERIALS

A. Primary framing (rigid frames):
1. Welded plates or hot-rolled steel columns and roof beams, complete with necessary splice or connector plates for bolted field assembly.
a. Minimum nominal thickness of structural shapes or their elements shall be 1/4-inch.
2. Welding procedures, welder qualifications, and welding quality standards shall be in accordance with AWS D1.1 and AWS D1.3.
3. Base, cap, compression plates, and stiffener plates shall be factory-welded in place and shall have shop-fabricated connection holes.
a. Provide minimum 4 anchor bolts per column base.
4. Columns and roof beams shall be fabricated complete with holes in webs and flanges for attaching bracing and roof and sidewall framing.

5. Shop finishing:
    a. Shop primed for field painting:
        1) Clean ferrous surfaces of oil, grease, loose rust, loose mill scale, and other foreign substances, in accordance with the SSPC-SP2.
        2) Apply 1 coat of shop primer in accordance with SSPC Paint Specification No. 15.
            a) Remove shop primer as specified in Section 09960 - High-Performance Coatings prior to field coating.

B. Secondary framing (purlins, girts, framing at endwalls and openings, eave struts, bracing):
    1. Hot rolled structural steel or cold-formed members.
    2. Minimum thickness: 16-gauge.
    3. Bracing elements constructed of wire rope, stranded tendons, or other similar material is not permitted.
        a. Rolled angle sections or solid steel bar is permitted.
    4. Provide factory-punched holes for panel connections.
    5. Shop finishing - hot rolled sections:
        a. Shop-primed for field painting:
            1) Clean ferrous surfaces of oil, grease, loose rust, loose mill scale, and other foreign substances, in accordance with the SSPC-SP2.
            2) Apply 1 coat of shop primer in accordance with SSPC Paint Specification No. 15.
                a) Remove shop primer as specified in Section 09960 - High-Performance Coatings prior to field coating.
    6. Shop finishing - Cold-formed sections:
        a. Shop primed for field painting:
            1) Clean ferrous surfaces of oil, grease, loose rust, loose mill scale, and other foreign substances, in accordance with the SSPC-SP2.
            2) Apply 1 coat of shop primer in accordance with SSPC Paint Specification No. 15.
                b) Remove shop primer as specified in Section 09960 - High-Performance Coatings prior to field coating.

C. Roof panels:
    1. Roll-formed minimum 24-gauge steel, factory-finished each side.
    2. Panels shall have interlocking side seams and shall be the manufacturer's maximum standard width Factory cut to maximum possible length to minimize end laps.
    3. Factory pre-punched for fastening.
    4. Panel finish:
        a. Factory pre-painted, pre-finished coating consisting of a UV light-resistant polyvinylidene diflouride (PVDF) resin based paint and primer system having a total thickness not less than 1.0 mil on an approximately 55 percent aluminum-43 percent zinc-1 percent silicone galvanized coating complying with ASTM A792.
        b. The galvanized coating shall be deposited at a minimum rate of 0.50 ounces/square foot.
        c. Furnish manufacturer's standard color chart for Owner's selection.
    5. Ridge panel: 1-piece, factory-formed to match roof slope at each side, of same material as roof panels, and capable of completely sealing roof ridge.

D. Bolted joint components: High-strength steel bolts used for steel-to-steel structural connections.
   1. Bolts: ASTM F3125, Grade A325, Type 1.
   2. Nuts: ASTM A563, heavy hex. Grade and finish to match bolts as specified in RCSC Specification for Structural Joints Using High Strength Bolts.
   3. Washers: ASTM F436; flat unless otherwise noted.
   4. Load indicator devices:
      a. Twist-off type tension-control bolt assemblies: ASTM F3125, Grade A1852.
      b. Compressible washer direct tension indicators: ASTM F959, Type 325-1 for ASTM F3125, Grade A325 bolts.
   5. Bolts furnished for the project shall be a single size and grade.

E. Anchor bolts or anchor rods: As specified in Section 05190 - Mechanical Anchoring and Fastening to Concrete and Masonry except that material shall be Type 316 stainless steel unless otherwise indicated on the Drawings.

F. Fasteners and washers:
   1. Fasteners and washers used for attachment of wall and roof panels.
   2. Fasteners: Vinyl-coated steel or stainless steel.
   3. Washers: Neoprene or other accepted type washer capable of being used to ensure watertightness at fastening locations.

G. Gutters and downspouts:
   1. 24-gauge steel.
   2. Galvanized in accordance with ASTM A653 to G90 designation.
   3. Field painted. Color to be selected by Owner to complement wall panels.

H. Touch-up painting materials:
   1. For structural elements:
      a. Shop primer: Manufacturer’s standard primer.
      b. Touch-up paint: Same as shop primer.
   2. For sheet metal skin:
      a. Exterior finish paint: Match specified coating.
         1) Color: Color as selected by the Engineer.

2.04 FABRICATION

A. Shop fabrication:
   1. Structural elements:
      a. Fabricate rigid frame of hot-rolled sections or continuously welded plate sections.
      b. Field connections shall be bolted unless otherwise accepted by the Engineer.
   2. Roof panels:
      a. Panel splicing: Panels may be spliced with minimum end overlap of 9 inches at purlins.
      b. Ridge panel: Provide 1 piece ridge panel, factory formed to match roof slope, of same material as roof panel, and capable of completely sealing roof ridge.

c. Expansion of roof panels: Provide means to allow expansion of roof panels.

3. Fasteners for roof panels:
   a. Fasteners: Secure with fasteners that ensure maximum weathertightness, proper bearing surface, and permanent seal at point of fastening.
   b. Washers: Use washers capable of assuring watertightness at fastening locations.
4. Accessories:
   a. Gutters, downspouts, and hangers:
      1) Provide 4-inch gutters, downspouts, and hangers as indicated on the Drawings.

B. Tolerances:
1. Hot-rolled sections: In accordance with AISC 303.
2. Cold-formed and Built-up sections: In accordance with MBMA Metal Building Systems Manual.

2.05 SOURCE QUALITY CONTROL

A. General.
1. Components of the metal building system fabricated in the manufacturer's shop will not be subject to special inspection, as specified in this Section.

PART 3 EXECUTION

3.01 EXAMINATION

A. Verification of conditions:
1. Verify site conditions prior to start of work. Unacceptable conditions shall be reported to Engineer.
2. Starting of erection of metal building system work shall indicate acceptance of existing conditions.
   a . Manufacturer or manufacturer's trained erector shall review and examine existing site conditions, foundation, and surface preparation, and adequacy of site-prepared components prior to commencing erection of the building.

3.02 ERECTION

A. General:
1. Erect in accordance with the MBMA, Metal Building Systems Manual and manufacturer's instruction, except as modified in this Section.
2. Separate dissimilar materials with gaskets or suitable insulating coatings.
3. Keep exposed surfaces clean and free from sealant, metal cuttings, and other foreign materials.

B. Framing and structural members:
1. Set anchor rods by template and securely tie into formwork before concrete placement.

2. Provide uniform bearing under baseplates and sills by filling using a nonshrinking grout as recommended by the manufacturer.

C. Roof:
   1. Erect a structure that will be free from water leaks and meet design requirements.
   2. Direct side lap edges away from the prevailing winds at the site.
   3. Do not exceed the maximum fastener spacings specified.
      a. Space fasteners uniformly not to exceed: 8 inches on center at ends of covering, 12 inches on center at intermediate supports and at roof covering side laps, and 18 inches on center at wall covering side laps.
   4. Install fasteners in straight lines within a tolerance of 1/2-inch per bay.
   5. Seal side laps, ends of roof, wall coverings, and joints at accessories.
      a. Drive fasteners to the surface and seat gasketed heads and washers.
   6. Fasten accessories to framing members, except as otherwise accepted by the Engineer.
   7. Wall panels shall be isolated from concrete floor slab and/or foundation.
   8. Flashing shall be provided at the base of wall panels to prevent wind-driven rain from entering the building envelope.

D. Gutters and downspouts:
   1. Attach securely to the building.
   2. Install gutters sloped to drain with adequate provisions for expansion and contraction.

3.03 FIELD QUALITY CONTROL

A. General:
   1. Installation of metal building system will be subject to special inspection and evaluation during construction, as specified in this Section.

3.04 ADJUSTING

A. Field painting:
   1. Prepare and touch up abraded or corroded spots on shop-primed surfaces immediately after erection.
      a. Use the same material as was used for the shop coat.
   2. Paint shop-primed ferrous surfaces as specified in Section 09960 - High-Performance Coatings.

B. Touch-up factory finished surfaces of roof and wall panels with the manufacturers recommended paint where damaged or abraded.

C. Where shop processes such as shearing or punching leave edges of galvanized steel unprotected by galvanization, touch up unprotected edges as specified in this Section.

3.05 CLEANING

A. Remove excess materials, equipment, and debris incidental to this work upon completion.

3.06 PROTECTION

A. During erection, the erector shall be responsible for the protection of this and all adjacent work from damage.

END OF SECTION

SECTION 15052

COMMON WORK RESULTS FOR GENERAL PIPING

PART 1 GENERAL

1.01 SUMMARY

A. Section includes: Basic materials and methods for metallic and plastic piping systems.

1.02 REFERENCES

A. American Society of Mechanical Engineers (ASME):
   1. B16.5 - Pipe Flanges and Flanged Fittings: NPS 1/2 Through 24.
   2. B16.47 - Large Diameter Steel Flanges: NPS 26 Through NPS 60 Metric/Inch Standard.

B. American Water Work Association (AWWA):
   1. C11 - Rubber-Gasket Joints for Ductile-Iron Pressure Pipe.
   2. C111 - Rubber-Gasket Joints for Ductile-Iron Pressure Pipe and Fittings.
   3. C151 - Ductile-Iron Pipe, Centrifugally Cast.
   4. C207 - Standard for Steel Pipe Flanges for Waterworks Services-Size 4 In. Through 144 In.

C. ASTM International (ASTM):
   1. A74 - Standard Specification for Cast Iron Soil Pipe and Fittings.
   2. A193 - Standard Specification for Alloy-Steel and Stainless Steel Bolting for High Temperature or High Pressure Service and Other Special Purpose Applications.
   3. A194 - Standard Specification for Carbon Steel, Alloy Steel, and Stainless Steel Nuts for Bolts for High Pressure or High Temperature Service, or Both.
   4. A307 - Standard Specification for Carbon Steel Bolts, Studs, and Threaded Rod 60,000 PSI Tensile Strength.
   5. A320 - Standard Specification for Alloy-Steel and Stainless Steel Bolting for Low-Temperature Service.
   6. A563 - Standard Specification for Carbon and Alloy Steel Nuts.
   7. B88 - Standard Specification for Seamless Copper Water Tube.
   8. D2000 - Standard Classification System for Rubber Products in Automotive Applications.
   9. D2513 - Standard Specification for Polyethylene (PE) Gas Pressure Pipe, Tubing and Fittings.
   10. F37 - Standard Test Methods for Sealability of Gasket Materials.
   11. F593 - Standard Specification for Stainless Steel Bolts, Hex Cap Screws, and Studs.
   12. F594 - Standard Specification for Stainless Steel Nuts.
   13. F2329 - Standard Specification for Zinc Coating, Hot-Dip, Requirements of Application to Carbon and Alloy Steel Bolts, Screws, Washers, Nuts, and Special Threaded Fasteners.

1.03 DEFINITIONS

A. Buried Pipes: Pipes that are buried in the soil with or without a concrete pipe encasement.

B. Exposed Pipe: Pipes that are located above ground, or located inside a structure, supported by a structure, or cast into a concrete structure.

C. Pipes Adjacent to a Wet Wall: Pipe centerline within 10 inches of the wet wall.

D. Underground Pipes: Buried pipes - see A. above.

E. Underwater Pipes: Pipes below the top of walls in basins or tanks containing water.

F. Wet Wall: A wall with water on at least 1 side.

PART 2 PRODUCTS

2.01 GENERAL

A. Materials as specified in Section 01600 - Product Requirements.

2.02 LINK TYPE SEALS

A. Characteristics:
   1. Modular mechanical type, consisting of interlocking neoprene or synthetic rubber links shaped to continuously fill the annular space between the pipe and wall opening.
   2. Links to form a continuous rubber belt around the pipe.
   3. Provide a nylon polymer pressure plate with Type 316 stainless steel hardware. Isolate pressure plate from contact with wall sleeve.
   4. Hardware to be Type 316 stainless steel.
      a. Provide anti-galling lubricant for threads.

B. One of the following or equal:
   1. Link-Seal.
   2. Pipe Linx.

2.03 FLANGE BOLTS AND NUTS

A. General:
   1. Washer:
      a. Provide a washer for each nut.
      b. Washer shall be of the same material as the nut.
   2. Nuts: Heavy hex-head.
   3. Cut and finish flange bolts to project:
      a. Face of the bolt shall exceed face of nut by 1/8 inch minimum.
      b. A maximum of 1/4 inch beyond outside face of nut after assembly.
   4. Tap holes for cap screws or stud bolts when used.

5. Lubricant for stainless steel bolts and nuts:
    a. Chloride-free.
    b. Manufacturers: One of the following or equal:
        1) Huskey FG-1800 Anti-Seize.
        2) Weicon Anti-Seize High-Tech.

B. Ductile iron pipe:
1. On exposed pipes with pressures equal to or less than 150 pounds per square inch gauge (psig):
    a. Bolts: In accordance with ASTM A307, Grade B.
    b. Nuts: In accordance with ASTM A563, Grade A.
    c. Bolts and Nuts: Hot-dip galvanized in accordance with ASTM F2329.
2. On exposed pipes with pressures greater than 150 psig:
    a. Bolts: In accordance with ASTM A193, Grade B7.
    b. Nuts: In accordance with ASTM A194, Grade 2H.
    c. Bolts and nuts: Hot-dip galvanized in accordance with ASTM F2329.
3. On underwater pipes and pipes adjacent to wet walls:
    a. Bolts: In accordance with ASTM A193, Grade B8M.
    b. Nuts: In accordance with ASTM A194, Grade 8M.
4. On buried pipes:
    a. Bolts: In accordance with ASTM A307, Grade B.
    b. Nuts: In accordance with ASTM A563, Grade A.
    c. Coat with high solids epoxy.

2.04 MECHANICAL JOINTS BOLTS AND NUTS

A. Bolts including T-Bolts:
1. High strength low alloy steel in accordance with AWWA C111.
2. Type 304 stainless steel in accordance with ASTM F593

B. Heavy Hex Nuts:
1. High strength low alloy steel in accordance with AWWA C111.
2. Type 304 stainless steel in accordance with ASTM F594

2.05 GASKETS

A. General.
1. Gaskets shall be suitable for the specific fluids, pressure, and temperature conditions.
2. Capable of being applied on surface of piping with cavities to provide for an improved seal with the internal piping pressure.

B. Gaskets for flanged joints in ductile iron and steel piping for sewage service:
1. Suitable for pressures equal and less than 150 pounds per square inch gauge, temperatures equal and less than 100 degrees Fahrenheit, and raw sewage service.
2. Gasket material:
    a. SBR or neoprene elastomer with minimum Shore A hardness value of 70.
    a. Reinforcement: Cloth or synthetic fiber.
    b. Thickness: Minimum 3/32-inch thick for less than 10-inch pipe; minimum 1/8 inch thick for 10-inch and larger pipe.

3. Manufacturers: One of the following or equal:
    a. Pipe less than 48 inches in diameter:
        1) Garlock, Style 7797.
        2) John Crane, similar product.
    b. Pipe 48 inches in diameter and larger:
        1) Garlock, Style 3760.
        2) John Crane, similar product.

C. Gaskets for flanged joints in ductile iron:
1. Suitable for hot or cold water, pressures equal to and less than 150 pounds per square inch gauge, and temperatures equal to and less than 160 degrees Fahrenheit.
2. Material:
    a. SBR or neoprene elastomer, compressed, with non-asbestos fiber reinforcement.
3. Manufacturers: One of the following or equal:
    a. Garlock, Bluegard 3300.
    b. John Crane, similar product.

PART 3 EXECUTION

3.01 INSTALLATION

A. General:
1. Piping drawings:
    a. Except in details, piping is indicated diagrammatically. Not every offset and fitting, or structural difficulty that may be encountered has been indicated on the Drawings. Sizes and locations are indicated on the Drawings.
    b. Perform minor modifications to piping alignment where necessary to avoid structural, mechanical, or other type of obstructions that cannot be removed or changed.
        1) Modifications are intended to be of minor scope, not involving a change to the design concept or a change to the Contract Price or Contract Times.
2. Piping alternatives:
    a. Provide piping as specified in this Section, unless indicated on the Drawings or specified otherwise.
    b. Alternative pipe ratings:
        1) Piping with greater pressure rating than specified may be substituted in lieu of specified piping without changes to the Contract Price.
        2) Piping of different material may not be substituted in lieu of specified piping.
    c. Valves in piping sections: Capable of withstanding specified test pressures for piping sections and fabricated with ends to fit piping.
    d. Grooved joints: Use couplings, flange adapters, and fittings of the same manufacturer.
        1) Manufacturer’s factory trained representative:
            a) Provide on-site training for Contractor’s field personnel.

b) Periodically visit the jobsite to verify Contractor is following best recommended practices.
2) Distributor's representative is not considered qualified to conduct the training or jobsite visits.
e. Flanged joints: where 1 of the joining flanges is raised face type, provide a matching raised face type flange for the other joining flange.
3. Unless otherwise indicated on the Drawings, piping at pipe joints, fittings, couplings, and equipment shall be installed without rotation, angular deflection, vertical offset, or horizontal offset.

B. Wall and slab penetrations:
1. Provide sleeves for piping penetrations through aboveground masonry and concrete walls, floors, ceilings, roofs, unless specified or otherwise indicated on the Drawings.
2. Provide flexibility in piping connecting to structures to accommodate movement due to soil settlement and earthquakes. Provide flexibility using details indicated on the Drawings.
3. Core drilled openings:
a. Do not damage or cut existing reinforcing bars, electrical conduits, or other items embedded in the existing concrete without acceptance by Engineer.
b. Determine location of reinforcing bars or other obstructions with a non-destructive indicator device.
c. Remove dust and debris from hole using compressed air.

C. Exposed piping:
1. Install exposed piping in straight runs parallel to the axes of structures, unless otherwise indicated on the Drawings:
a. Install piping runs plumb and level, unless otherwise indicated on the Drawings.
1) Slope plumbing drain piping with a minimum of 1/4-inch per foot downward in the direction of flow.
2. Install exposed piping after installing equipment and after piping and fitting locations have been determined.
3. Support piping as required.
4. In addition to the joints indicated on the Drawings, provide unions, flexible couplings, flanged joints, flanged coupling adapters, and other types of joints or means which are compatible with and suitable for the piping system, and necessary to allow ready assembly and disassembly of the piping.
5. Assemble piping without distortion or stresses caused by misalignment:
a. Match and properly orient flanges, unions, flexible couplings, and other connections.
b. Do not subject piping to bending or other undue stresses when fitting piping.
c. Do not correct defective orientation or alignment by distorting flanged joints or subjecting flange bolts to bending or other undue stresses.
d. Flange bolts, union halves, flexible connectors, and other connection elements shall slip freely into place.
e. Alter piping assembly to fit when proper fit is not obtained.
f. Install eccentric reducers or increasers with the top horizontal for pump suction piping.

D. Buried piping:
   1. Bury piping with minimum 3-foot cover without air traps, unless otherwise indicated on the Drawings.
   2. Where 2 similar services run parallel to each other, piping for such services may be laid in the same trench.
      a. Lay piping with sufficient room for assembly and disassembly of joints, for thrust blocks, for other structures, and to meet separation requirements of public health authorities having jurisdiction.
   3. Laying piping:
      a. Lay piping in finished trenches free from water or debris. Begin at the lowest point with bell ends up slope.
      b. Place piping with top or bottom markings with markings in proper position.
      c. Lay piping on an unyielding foundation with uniform bearing under the full length of barrels.
      d. Where joints require external grouting, banding, or pointing, provide space under and immediately in front of the bell end of each section laid with sufficient shape and size for grouting, banding, or pointing of joints.
      e. At the end of each day's construction, plug open ends of piping temporarily to prevent entrance of debris or animals.

E. Venting piping under pressure:
   1. Lay piping under pressure flat or at a continuous slope without air traps, unless otherwise indicated on the Drawings.
   2. Install plug valves as air bleeder cocks at high points in piping.
      a. Provide 1-inch plug valves for water lines, and 2-inch plug valves for sewage and sludge lines, unless otherwise indicated on the Drawings.
   3. Provide additional pipe taps with plug cocks and riser pipes along piping as required for venting during initial filling, disinfecting, and sampling.
   4. Before piping is placed into service, close plug valves and install plugs. Protect plugs and plug valves from corrosion in as specified in Section 09960 - High-Performance Coatings.

F. Restraining buried piping:
   1. Restrain piping at valves and at fittings where piping changes direction, changes sizes, and at ends:
      a. When piping is underground, use concrete thrust blocks, mechanical restraints, or push-on restraints.
      b. Determine thrust forces by multiplying the nominal cross-sectional area of the piping by design test pressure of the piping.
   2. Provide restraints with ample size to withstand thrust forces resulting from test pressures:
      a. During testing, provide suitable temporary restraints where piping does not require permanent restraints.
   3. Place concrete thrust blocks against undisturbed soil.
   4. Place concrete so piping joints, fittings, and other appurtenances are accessible for assembly and disassembly.
   5. Provide underground mechanical restraints where specified in Attachment A - Piping Schedule.

G. Restraining above ground piping:
   1. Restrain piping at valves and at fittings where piping changes direction, changes sizes, and at ends:
      a. When piping is aboveground or underwater, use mechanical or structural restraints.
      b. Determine thrust forces by multiplying the nominal cross-sectional area of the piping by design test pressure of the piping.
   2. Provide restraints with ample size to withstand thrust forces resulting from test pressures:
      c. During testing, provide suitable temporary restraints where piping does not require permanent restraints.

H. Connections to existing piping:
   1. Expose existing piping to which connections are to be made with sufficient time to permit, where necessary, field adjustments in line, grade, or fittings:
      a. Protect domestic water/potable water supplies from contamination:
         1) Make connections between domestic water supply and other water systems in accordance with requirements of public health authorities.
         2) Provide devices approved by Owner of domestic water supply system to prevent flow from other sources into the domestic supply system.
   2. Make connections to existing piping and valves after sections of new piping to be connected have been tested and found satisfactory.
   3. Provide sleeves, flanges, nipples, couplings, adapters, and other fittings needed to install or attach new fittings to existing piping and to make connections to existing piping.
   4. For flanged connections, provide stainless steel bolts with isolation bushings and washers, and full-face flange gaskets.

I. Connections between ferrous and nonferrous metals:
   1. Connect ferrous and nonferrous metal piping, tubing, and fittings with dielectric couplings especially designed for the prevention of chemical reactions between dissimilar metals.
   2. Nonferrous metals include aluminum, copper, and copper alloys.

J. Flanged connections between dissimilar metals such as ductile iron pipe and steel pipe:
   1. Provide stainless steel bolts with isolation bushings and washers, and full-face flange gaskets.

3.02 CLEANING

A. Piping cleaning:
   1. Upon completion of installation, clean piping interior of foreign matter and debris.
   2. Perform special cleaning when required by the Contract Documents.

B. Conduct pressure and leak test, as specified.

3.03 PIPING SCHEDULE

A. As specified in Attachment A - Piping Schedule

END OF SECTION

ATTACHMENT A - PIPING SCHEDULE

PIPING SCHEDULE

ocess brev.	Service	Nominal Diameter (inches)	Material	Pressure Class Special Thickness Class Schedule Wall Thickness	Pipe Spec. Section	Joints/ Fittings	Test Pressure/ Method	Lining	Coating	Service Conditions
RS	Raw Sewage (Aboveground Temporary Piping)	All	DIP	Class 350	15211	R-MJ, R-PJ, or FL	20 psig/LH	CE	HSEP	Exposed/ Buried
RS	Raw Sewage (Aboveground Temporary Piping)	All	HDPE	SDR26	15241	R-MJ, R-PJ, or FL	20 psig/LH	None	Manufacturer's Recommendation	Exposed/ Buried

previations:

The following abbreviations used in the column of test method refer to the pective methods as specified in Section 15956 - Piping Systems Testing.

- AM Air method
- GR Gravity method
- HH High head method
- LH Low head method
- SC Special case

Abbreviations to designate piping include the following:

- B&SP Bell and spigot
- BSP Black Steel Pipe
- CE Ceramic epoxy lining
- CI Cast iron
- CISP Cast iron soil pipe
- CL Class, followed by the designation
- CM Cement mortar
- CTP Coal tar pitch
- DIP Ductile iron piping
- EPP Epoxy polyurethane coating
- FL Flange
- GA Gauge, preceded by the designation GEGrooved end j
- GL Glass lined
- GSP Galvanized steel pipe
- HDPE High-density polyethylene
- HSEP High-solids epoxy
- MJ Mechanical joint
- MWA Mechanical wedge action
- NPS Nominal pipe size, followed by the number in inches
- psi pounds per square inch
- psig pounds per square inch gauge
- PE Polyethylene
- PEE Polyethylene encasement
- PTW Polyethylene tape wrap
- PVC Polyvinyl Chloride
- PJ Push-on
- R Restrained
- SCH Schedule, followed by the designation
- SCRD Screwed-On
- SST Stainless steel
- SW Solvent welded
- VCP Vitrified clay piping
- WLD Weld

SECTION 15061

PIPE SUPPORTS

PART 1 GENERAL

1.01 SUMMARY

A. Section includes: Supports for pipe, fittings, valves, and appurtenances.

1.02 REFERENCES

A. ASTM International (ASTM):
   1. A380 - Standard Practice for Cleaning, Descaling, and Passivation of Stainless Steel Parts, Equipment, and Systems.
   2. A967 - Standard Specification for Chemical Passivation Treatments for Stainless Steel Parts.

B. Manufacturer's Standardization Society (MSS):
   1. SP-58 - Pipe Hangers and Supports - Materials, Design, and Manufacture.

1.03 SUBMITTALS

A. Submit as specified in Section 01330 - Submittal Procedures

B. Product data.
   1. Design features.
   2. Load capacities.
   3. Material designations by UNS alloy number or ASTM Specification and Grade.
   4. Data needed to verify compliance with the Specifications.
   5. Catalog data.
   6. Clearly mark submittal information to show specific items, materials, and accessories or options being furnished.

1.04 WARRANTY

A. Provide warranty as specified.

PART 2 PRODUCTS

2.01 GENERAL

A. As specified in Section 01600 - Product Requirements.

2.02 MATERIALS

A. Outdoor areas: Areas exposed to the natural outdoor environment:
   1. Type 316 Stainless Steel.

2.03 PIPE SUPPORTS

A. Hanger rods: Sized to match suspended pipe hanger, or as indicated on the Drawings:
   1. Manufacturers: One of following or equal:
      a. For stainless steel piping:
         1) Bergen-Power, Figure 133.
         2) Nibco-Tolco, Figure 103.
      b. For all other piping, unless indicated on the Drawings:
         1) Anvil International, Figure 140.
         2) Bergen-Power, Figure 133.
         3) Cooper B-Line Systems, Inc., Figure B3205.

B. Hanger rods, continuously threaded: Sized to match suspended pipe hanger, or as indicated on the Drawings:
   1. Manufacturers: One of the following or equal:
      a. For stainless steel piping:
         1) Bergen-Power, Figure 94.
         2) FM Stainless Fasteners.
      b. For steel and ductile iron piping:
         1) Anvil International, Figure 146.
         2) Bergen-Power, Figure 94.

C. Eye bolts:
   1. For stainless steel piping:
      a. Type 316 stainless steel, welded and rated equal to full load capacity of rod.
   2. For all other piping, unless indicated on the Drawings:
      a. Welded and rated equal to full load capacity of rod.

D. Welded eyebolt rod:
   1. Manufacturers: One of the following or equal:
      a. For stainless steel piping:
         1) Nibco-Tolco, Figure 101.
         2) FM Stainless Fasteners.
      b. For all other piping, unless indicated on the Drawings:
         1) Anvil International, Figure 278.
         2) Bergen-Power, Figure 93.
         3) Cooper B-Line Systems, Inc., Figure B3210.

E. Adjustable ring hangers: MSS SP-58, Type 7 or Type 9 (system dependent):
   1. Manufacturers: One of the following or equal:
      a. For stainless steel piping:
         1) Nibco-Tolco, Figure 1C.I.
         2) Bergen-Power, Figure 100SS.
      b. For all other piping, unless indicated on the Drawings:
         1) Anvil International, Figure 69.
         2) Cooper B-Line Systems, Inc., Figure B3172.

F. Adjustable clevis hangers: MSS SP-58, Type 1:
   1. Manufacturers: One of the following or equal:
      a. For stainless steel piping:
         1) Cooper B-Line Systems, Inc., Figure B3100 or B3102.
         2) FM Stainless Fasteners, Figure 60.
      b. For all other piping, unless indicated on the Drawings:
         1) Anvil International, Figure 260 or Figure 590.
         2) Bergen-Power, Figure 100.
         3) Cooper B-Line Systems, Inc., Figure B3100 or B3102.

G. Adjustable clevis hangers for insulated pipe: Oversize:
   1. Manufacturers: One of the following or equal:
      a. For stainless steel piping:
         1) Nibco-Tolco, Figure 1A.
      b. For all other piping, unless indicated on the Drawings:
         1) Anvil International, Figure 300.
         2) Bergen-Power, Figure 100EL.
         3) Cooper B-Line Systems, Inc. Figure B3108.

H. Single rod hangers for steam pipe: MSS SP-58, Type 43; malleable iron or steel yoke and roller hangers; swivel to allow rotation of yoke on rod:
   1. Manufacturers: One of the following or equal:
      a. For stainless steel piping:
         1) Nibco-Tolco, Figure 324.
         2) Cooper B-Line Systems, Inc., Figure B3110.
         3) FM Fasteners, Figure 81.
      b. For all other piping, unless indicated on the Drawings:
         1) Anvil International, Figure 181.
         2) Cooper B-Line Systems, Inc., Figure B3110.

I. Double rod hangers for steam pipe: MSS SP-58, Type 41:
   1. Manufacturers: One of the following or equal:
      a. For stainless steel piping:
         1) FM Stainless Fasteners, Figure 71.
      b. For all other piping, unless indicated on the Drawings:
         1) Anvil International, Figure 171.
         2) Cooper B-Line Systems, Inc., Figure B3114.

J. Brackets: MSS SP-58, Type 32 with back plate; rated for 1,500 pounds:
   1. Manufacturers: One of the following or equal:
      a. For stainless steel piping:
         1) Nibco-Tolco, Figure 30M.
         2) Cooper B-Line Systems, Inc., Figure B3066.
         3) FM Stainless Fasteners, Figure 98.
      b. For all other piping, unless indicated on the Drawings:
         1) Anvil International, Figure 195.
         2) Cooper B-Line Systems, Inc., Figure B3066.

K. Standard U-bolt: MSS SP-58, Type 24:
   1. Manufacturers: One of the following or equal:
      a. For stainless steel piping:
         1) Nibco-Tolco, Figure 110.
         2) Cooper B-Line Systems, Inc., Figure B3188.
         3) FM Stainless Fasteners, Figure 37.
      b. For all other piping, unless indicated on the Drawings:
         1) Anvil International, Figure 137.
         2) Bergen-Power, Figure 283.
         3) Cooper B-Line Systems, Inc., Figure B3188.

L. Riser clamps: MSS SP-58, Type 8:
   1. Manufacturers: One of the following or equal:
      a. For stainless steel piping:
         1) Cooper B-Line Systems, Inc., Figure B3373.
         2) FM Stainless Fasteners, Figure 61.
      b. For all other piping, unless indicated on the Drawings:
         1) Anvil International, Figure 261.
         2) Bergen-Power, Figure 126.
         3) Cooper B-Line Systems, Inc., Figure B3373.

M. Pipe clamps: MSS SP-58, Type 4:
   1. Manufacturers: One of the following or equal:
      a. For stainless steel piping:
         1) Nibco-Tolco, Figure 4.
         2) Cooper B-Line Systems, Inc., Figure 3140.
      b. For all other piping, unless indicated on the Drawings:
         1) Anvil International, Figure 212.
         2) Bergen-Power, Figure 175.
         3) Cooper B-Line Systems, Inc., Figure B3140.

N. Adjustable offset pipe clamp:
   1. Manufacturers: One of the following or equal:
      a. For stainless steel piping:
         1) Nibco-Tolco, Figure 4.
         2) Cooper B-Line Systems, Inc., Figure B3149.
         3) FM Stainless Fasteners, Figure 63.
      b. For all other piping, unless indicated on the Drawings:
         1) Anvil International, Figure 100.
         2) Cooper B-Line Systems, Inc., Figure B3149.

O. Offset pipe clamp:
   1. Manufacturers: One of the following or equal:
      a. For stainless steel piping:
         1) Nibco-Tolco, Figure 8.
         2) Cooper B-Line Systems, Inc., Figure 3148.
      b. For all other piping, unless indicated on the Drawings:
         1) Anvil International, Figure 103.
         2) Cooper B-Line Systems, Inc., Figure B3148.

P. Floor stand or stanchion saddles: MSS SP-58, Type 37. Provided with U-bolt hold down yokes:
   1. Manufacturers: One of the following or equal:
      a. For stainless steel piping:
         1) Nibco-Tolco, Figure 318.
         2) FM Stainless Fasteners, Figure 59.
      b. For all other piping, unless indicated on the Drawings:
         1) Anvil International, Figure 259.
         2) Bergen-Power, Figure 125.
         3) Cooper B-Line Systems, Inc., Figure B3090.
      c. Threaded pipe stand support stanchion. Match pipe support material.
         1) Anvil International, Figure 63T.
         2) Bergen-Power, Figure 138.
         3) Cooper B-Line Systems Inc., Figure B3088ST.

Q. Spring hangers:
   1. Manufacturers: One of the following or equal:
      a. For stainless steel piping:
         1) Bergen-Power, Figure 920.
      b. For all other piping, unless indicated on the Drawings:
         1) Anvil International, Figure B-268, Type G.
         2) Bergen-Power, Figure 920.

R. Welded beam attachment: MSS SP-58, Type 22:
   1. Manufacturers: One of the following or equal:
      a. For stainless steel piping:
         1) Nibco-Tolco, Figure 304.
         2) Cooper B-Line Systems, Inc., Figure 3083.
      b. For all other piping, unless indicated on the Drawings:
         1) Anvil International, Figure 66.
         2) Bergen-Power, Figure 113A or 113B.
         3) Cooper B-Line Systems, Inc., Figure B3083.

S. Heavy pipe clamp: MSS SP-58, Type 4:
   1. Manufacturers: One of the following or equal:
      a. For stainless steel piping:
         1) Nibco-Tolco, Figure 4H.
      b. For all other piping, unless called out otherwise on the drawings:
         1) Anvil International, Figure 216.
         2) Bergen-Power, Figure 298.

T. PTFE pipe slide assembly: MSS SP-58, Type 35 with lateral and vertical restraint:
   1. Manufacturers: One of the following or equal:
      a. For stainless steel piping:
         1) Nibco-Tolco, Figure 426.
      b. For all other piping, unless indicated on the Drawings:
         1) Anvil International, Figure 257, Type 3.
         2) Cooper B-Line Systems, Inc., Figure B3893.

PART 3 EXECUTION

3.01 INSTALLATION

A. Support, suspend, or anchor exposed pipe, fittings, valves, and appurtenances to prevent sagging, overstressing, or movement of piping; and to prevent thrusts or loads on or against connected pumps, blowers, and other equipment.

B. Field verify support location, orientation, and configuration to eliminate interferences prior to fabrication of supports.

C. Carefully determine locations of inserts. Anchor to formwork prior to placing concrete.

D. Use flush shells only where indicated on the Drawings.

E. Do not use anchors relying on deformation of lead alloy.

F. Do not use powder-actuated fasteners for securing metallic conduit or steel pipe larger than 1-inch to concrete, masonry, or wood.

G. Suspend pipe hangers from hanger rods and secure with double nuts.

H. Install continuously threaded hanger rods only where indicated on the Drawings.

I. Use adjustable ring hangers or adjustable clevis hangers for 4-inch and smaller diameter pipe.

J. Use adjustable clevis hangers for pipe larger than 4 inches in diameter.

K. Secure pipes with double nutted U-bolts or suspend pipes from hanger rods and hangers.
   1. For stainless steel piping, use stainless steel U-bolts.
   2. For all other piping, use galvanized U-bolts.

L. Support spacing:
   1. Support larger than 2-inch piping on horizontal and vertical runs at maximum 10 feet on center, unless otherwise specified.
   2. Support exposed polyvinyl chloride and other plastic pipes at maximum 5 feet on center, regardless of size.
   3. Do not suspend or support valves, pipe and fittings from another pipe or conduit.

M. Install supports at:
   1. Any change in direction.
   2. Both sides of flexible pipe connections.
   3. Base of risers.
   4. Floor penetrations.
   5. Connections to pumps, blowers, and other equipment.
   6. Valves and appurtenances.

N. Securely anchor plastic pipe, valves, and headers to prevent movement during operation of valves.

O. Anchor plastic pipe between expansion loops and direction changes to prevent axial movement through anchors.

P. Provide elbows or tees supported from floors with base fittings where indicated on the Drawings.

Q. Support base fittings with metal supports or when indicated on the Drawings support on concrete piers.

R. Do not use chains, plumbers' straps, wire, or similar devices for permanently suspending, supporting, or restraining pipes.

S. Support plumbing drainage and vents in accordance with plumbing code as specified in Section 01410 - Regulatory Requirements.

T. Supports, clamps, brackets, and portions of support system bearing against copper pipe: Copper plated, copper throughout, or isolated with neoprene or polyvinyl chloride tape.

U. Install riser clamps at floor penetrations and where indicated on the Drawings.

END OF SECTION

SECTION 15110

COMMON WORK RESULTS FOR VALVES

PART 1 GENERAL

1.01 SUMMARY

A. Section includes: Basic requirements for valves.

1.02 REFERENCES

A. American Water Works Association (AWWA):
   1. C111/A21.11 - Standard for Rubber-Gasket Joints for Ductile-Iron Pressure Pipe Fittings.

B. ASTM International (ASTM):
   1. A126 - Standard Specification for Gray Iron Casting for Valves, Flanges, and Pipe Fittings.
   2. A480 - Standard Specification for General Requirements for Flat-Rolled Stainless and Heat-Resisting Steel Plate, Sheet, and Strip.
   3. A536 - Standard Specification for Ductile Iron Castings.

C. NSF International (NSF):
   1. 61 - Drinking Water System Components - Health Effects.

D. Society for Protective Coatings (SSPC):
   1. SP7 - Brush-Off Blast Cleaning.
   2. SP10 - Near-White Blast Cleaning.

1.03 SUBMITTALS

A. Submit as specified in Section 01330 - Submittal Procedures.

B. Product data:
   1. Submit the following information for each valve:
      a. Valve type, size, pressure rating, Cv factor.
      b. Coatings.
      c. Manual valve actuators:
         1) Information on valve actuator including size, manufacturer, model number.
      d. Certified drawings with description of component parts, dimensions, weights, and materials of construction.
      e. Certifications of reference standard compliance:
         1) Submit certification that the valves and coatings are suitable in potable water applications in accordance with NSF 61.
      f. Clearly mark submittal information to show specific items, materials, and accessories or options being furnished.

C. Provide vendor operation and maintenance manual as specified in Section 01782 - Operation and Maintenance Manuals.
   1. Furnish bound sets of installation, operation, and maintenance instructions for each type of manual valve 4 inches in nominal size and larger, and all non-manual valves. Include information on valve operators.

D. Provide Manufacturer's Certificate of Source Testing as specified in Section 01756 - Commissioning.

E. Provide Manufacturer's Certificate of Installation and Functionality Compliance as specified in Section 01756 - Commissioning.

1.04 QUALITY ASSURANCE

A. Manufacturer qualifications:
   1. Valves manufactured by manufacturers whose valves have had successful operational experience in comparable service.

1.05 DELIVERY STORAGE AND HANDLING

A. Protect valves and protective coatings from damage during handling and installation; repair coating where damaged.

PART 2 PRODUCTS

2.01 DESIGN AND PERFORMANCE CRITERIA

A. Pressure rating:
   1. Suitable for service under minimum working pressures of 150 pounds per square inch gauge.
   2. When a piping system is specified in the Piping Schedule to be tested at a pressure greater than 150 pounds per square inch gauge, provide valves for that piping system with design working pressure which is sufficient to withstand the test pressure.

B. Valve to piping connections:
   1. Metallic valves:
      a. Valves 3 inches nominal size and larger: Flanged ends.
      b. Valves less than 3 inches nominal size: Screwed ends.
   2. Plastic valves in plastic piping systems:
      a. 6 inches and above: Provide solvent or heat-welded flanges.

2.02 MATERIALS

A. Stainless steel: In accordance with ASTM A480, Type 316, or Type 304, UNS Alloy S31600 or S30400.

B. Valve and operator bolts and nuts (not including flange bolts and nuts, which are specified in Section 15052 - Common Work Results for General Piping):
   1. Fabricated of stainless steel for the following installation conditions:
      a. Submerged in sewage or water.
      b. In an enclosed space above sewage or water.
      c. In structures containing sewage or water, below top of walls.
      d. At openings in concrete or metal decks.
   2. Where dissimilar metals are being bolted, use stainless steel bolts with isolation bushings and washers.
   3. Underground bolts: Low-alloy steel in accordance with AWWA C111/A21.11.

C. Bronze and brass alloys: Use bronze and brass alloys with not more than 6 percent zinc and not more than 2 percent aluminum in the manufacture of valve parts; UNS Alloy C83600 or C92200 unless specified otherwise.

D. Cast iron valve bodies: In accordance with ASTM A126, Class 30 minimum.

E. Ductile iron valve bodies: In accordance with ASTM A536, Grade 65-45-12 minimum unless specified otherwise.

2.03 INTERIOR PROTECTIVE LINING

A. When specified in the particular valve specification, provide valves with type of protective lining specified in the particular valve Specification.

B. Apply protective lining to interior, non-working surfaces, except stainless steel surfaces.

C. Lining types:
   1. Fusion bonded epoxy:
      a. Manufacturers: The following or equal:
         1) 3-M Company, ScotchKote 134; certified to NSF 61 for drinking water use.
      b. Clean surfaces in accordance with SSPC SP 7 or SP 10, as recommended by epoxy manufacturer.
      c. Apply in accordance with manufacturer's published instructions.
      d. Lining thickness: 0.010 to 0.012-inch, except that:
         1) Lining thickness in grooves for gaskets: 0.005-inch.
         2) Do not coat seat grooves in valves with bonded seat.
      e. Quality control:
         1) Lining thickness: Measured with a non-destructive magnetic type thickness gauge.
         2) Verify lining integrity with a wet sponge-testing unit operating at approximately 60 volts, or as recommended by the lining manufacturer.
         3) Consider tests successful when lining thickness meets specified requirements and when no pinholes are found.
         4) Correct defective lining disclosed by unsuccessful tests, and repeat test.
         5) Repair pinholes with liquid epoxy recommended by manufacturer of the epoxy used for lining.

2. High solids epoxy:
    a. Product equivalent to high solids epoxy EPU-M-1 as specified in Section 09960 - High-Performance Coatings.
        1) Interior: Coat valve interior with manufacturer's equivalent high performance high solids epoxy coating system with a certifiable performance history for the service conditions and as approved by the Engineer. Manufacturer shall provide for approval, coating information sufficient to allow Engineer to assess equivalence to the specified high solids epoxy EPU-M-1 as specified in Section 09960 - High-Performance Coatings.
    b. Clean surfaces to meet SP-7 or SP-10, or as recommended by coating manufacturer.
    c. Quality control: After coating is cured, check coated surface for porosity with a holiday detector set at 1,800 volts, or as recommended by coating manufacturer.
        1) Repair holidays and other irregularities and retest coating.
        2) Repeat procedure until holidays and other irregularities are corrected.

2.04 UNDERGROUND VALVES

A. Provide underground valves with flanged, mechanical, or other type of joint required for the type of pipe to which the valve is to be connected.

B. Coating and wrapping:
    1. After installation, encase valves in polyethylene wrap as specified for ductile iron piping in Section 15211 - Ductile Iron Pipe: AWWA C151.
        a. Ascertain that polyethylene wrapping does not affect operation of valve.

2.05 STEAM VALVES (NOT USED)

2.06 VALVE BOXES

A. Provide cast-iron valve boxes at each buried valve to access valve and valve operators.

B. Do not support boxes on valve, valve operator, or pipe.

C. Boxes:
    1. 2-piece, fabricated of cast iron; provide cover, with asphalt varnish or enamel protective coating.
    2. Adjustable to grade, install centered around the upper portions of the valve and valve operator.

D. Manufacturers: One of the following or equal:
    1. Tyler Pipe Industries, Inc.
    2. Neenah Foundry Co.

2.07 VALVE OPERATORS

A. Valve operator "Open" direction: Open counterclockwise.

B. Provide valves located below operating level or deck with extensions for key operation or floor stands and handwheels, as indicated on the Drawings.

C. Provide manually operated valves located not more than 6 feet above the operating level with tee handles, wrenches, or handwheels.
   1. Make the valve operator more conveniently accessible by rolling valves, located more than 5 feet but less than 6 feet above the operating level, toward the operating side.
   2. Secure tee handles and wrenches to the valve head or stem, except where a handle or wrench so secured constitutes a hazard to personnel; in which case, stow handle or wrench immediately adjacent to the valve on or in a suitable hanger, bracket, or receptacle.

D. Fit valves located more than 6 feet above operating level with chain operated handles or valve wheels.
   1. Chains: Sufficient length to reach approximately 4 feet above the operating level.
   2. Where chains constitute a nuisance or hazard to operating personnel, provide holdbacks or other means for keeping the chains out of the way.

E. Provide an operator shaft extension from valve or valve operator to finished grade or deck level when buried valves, and other valves located below the operating deck or level, are specified or indicated on the Drawings to be key operated; provide 2 inches square AWWA operating nut, and box and cover as specified, or a cover where a box is not required.

PART 3 EXECUTION

3.01 EXAMINATION

A. Preparation prior to installation:
   1. Install valves after the required submittal on installation has been accepted.
   2. Determine after flanged valves and flanged check valves are selected, the face-to-face dimensions of flanged valves and flanged check valves.

B. Fabricate piping to lengths taking into account the dimensions of flanged valves and flanged check valves.

3.02 INSTALLATION

A. Provide incidental work and materials necessary for installation of valves including flange gaskets, flange bolts and nuts, valve boxes and covers, concrete bases, blocking, and protective coating.

B. Where needed, furnish and install additional valves for proper operation and maintenance of equipment and plant facilities under the following circumstances:
   1. Where such additional valves are required for operation and maintenance of the particular equipment furnished by Contractor.
   2. Where such additional valves are required as a result of a substitution or change initiated by Contractor.

C. Valve and actuator orientation:
   1. Contractor shall coordinate with valve supplier final orientation of valve and actuator assembly based on Contractor's selection of equipment manufacturers and the valve and piping arrangement as indicated on the Drawings.
      a. Contractor shall rotate valve and/or actuator mounting orientation as specified in this Section unless otherwise indicated on the Drawings.
   2. Install valves with their stems in vertical position above the pipe, except as follows:
      a. Butterfly valves, gate valves aboveground, globe valves, ball valves, and angle valves may be installed with their stems in the horizontal position.
      b. Install buried plug valves with geared operators with their stems in a horizontal position.
   3. Install valves so that handles clear obstructions when the valves are operated from fully open to fully closed.

D. Place top of valve boxes flush with finished grade or as otherwise indicated on the Drawings.

E. Valves with threaded connections:
   1. Install valves by applying wrench on end of valve nearest the joint to prevent distortion of the valve body.
   2. Apply pipe joint compound or Teflon™ tape on external (male) threads to prevent forcing compound into valve seat area.

F. Valves with flanged connections:
   1. Align flanges and gasket carefully before tightening flange bolts.
   2. When flanges are aligned, install bolts and hand tighten.
   3. Tighten nuts opposite each other with equal tension before moving to next pair of nuts.

G. Valves with soldered connections:
   1. Do not overheat connection to prevent damage to resilient seats and metal seat rings.
   2. Position valves in full open position before starting soldering procedure.
   3. Apply heat to piping rather than to valve body.

3.03 FIELD APPLIED COATING OF VALVE EXTERIOR

A. Match color and be compatible with manufacturer's coating system and as specified in Section 09960 - High-Performance Coatings.
   1. When shop applied finish coating matches field applied coating on adjacent piping, touch up shop coating in damaged areas in accordance with instructions recommended by the paint manufacturer.
   2. When shop applied coating does not match field coating on adjacent piping, or when damage has occurred to the shop applied coating that requires more than touchup, blast clean valve surfaces or utilize other surface preparation recommended by the manufacturer of the coating material and apply the coating system used for coating adjacent piping.

3.04 COMMISSIONING

A. As specified in Section 01756 - Commissioning and this Section.

B. Manufacturer services from each manufacturer for all valves supplied:
   1. Provide Manufacturer's Certificate of Source Testing.
   2. Provide Manufacturer's Certificate of Installation and Functionality Compliance.

C. As specified elsewhere for specific valve types, sizes or actuators.
   1. Source testing.
   2. Manufacturers on site services for Owner Training, Installation Testing, Functional Testing, and during the Process Operational Period.

END OF SECTION

SECTION 15116

PLUG VALVES

PART 1 GENERAL

1.01 SUMMARY

A. Section includes:
   1. Non-lubricated plug valves.
   2. Lubricated plug valves.

1.02 REFERENCES

A. American Water Works Association (AWWA):
   1. C517 - Resilient-Seated Cast Iron Eccentric Plug Valves.
   2. C606 - Grooved and Shouldered Joints.

B. ASTM International (ASTM):
   1. A536 - Standard Specification for Ductile Iron Castings.

1.03 SUBMITTALS

A. Submit as specified in Section 01330 - Submittal Procedures

A. Product data as defined in 01600 - Product Requirements.

B. Shop drawings showing installation arrangement of major component assemblies.

C. Calculations.

D. Vendor operation and maintenance manual as specified in Section 01782 - Operation and Maintenance Data.

E. Commissioning submittals:
   1. Provide Manufacturer's Certificate of Source Testing as specified in Section 01756 - Commissioning:
      a. Interior coating.
   2. Provide Manufacturer's Certificate of Installation and Functionality Compliance as specified in Section 01756 - Commissioning.

1.04 WARRANTY

A. Provide warranty as specified.

PART 2 PRODUCTS

2.01 GENERAL

A. As specified in Section 01600 - Product Requirements.

2.02 NON-LUBRICATED PLUG VALVES (PV00)

A. Manufacturers: One of the following or equal:
   1. DeZurik, "PEC".
   2. Clow Valve.
   3. Milliken Valve, Model 600/601.

B. Design:
   1. Type: Non-lubricated eccentric type, in accordance with AWWA C517.
   2. Plug face: Resilient material that operates satisfactorily at a temperature of 180 degrees Fahrenheit continuous and 215 degrees Fahrenheit intermittent, except for valves in compressed air or digester gas service.
      a. Valves in compressed air service: Resilient material suitable for continuous duty at 250 degrees Fahrenheit.
      b. Valves in digester gas service: Resilient material suitable for petroleum or digester gas at continuous duty at 180 degrees Fahrenheit.
   3. Compression washer: Provide flat compression washer made of Teflon™, or of a material having equal physical characteristics on valve stem between plug and bonnet.
   4. Stem seals: Provide stem seals serviceable without unbolting the valve bonnet assembly.
   5. Grit excluders: Provide PTFE grit excluders at upper plug journals to prevent entry of foreign solids in bearing area.
   6. Clearly mark valves to indicate their open and closed positions.

C. Materials:
   1. Body and plug: ASTM A536, Grade 65-45-12, ductile iron, with plug face of Buna N material suitable for the intended service as specified under paragraph "Design" above.
   2. Body seats in valves 3 inch size and larger: Provide with overlay of not less than 90-percent nickel and minimum thickness of 1/8-inch on surfaces contacting the plug face.
   3. Stem bearing and bottom bearing: Type 316 stainless steel.
   4. Internal parts, except the body and plug: Type 316 stainless steel.
   5. Exposed nuts, bolts, and washers: Zinc plated. Exception: Exposed nuts, bolts, and washers for buried service: Stainless steel.

2.03 NON-LUBRICATED PLUG VALVES, FULL PORT (PV05) (NOT USED)

2.04 LUBRICATED PLUG VALVES (PV60) (NOT USED)

2.05 MULTI-PORT PLUG VALVES FOR SLUDGE SERVICE (PV80) (NOT USED)

2.06 VALVE OPERATORS

A. Furnish valves 6-inch nominal size and larger with a worm gear operator.

2.07 COATING

A. Coat and test interior metal surfaces as specified in Section 15110 - Common Work Results for Valves.

B. Field applied coating of valve exterior:
   1. Match color and be compatible with manufacturer's coating system and as specified in Section 09960 - High-Performance Coatings.
      a. When shop applied finish coating matches field applied coating on adjacent piping, touch up shop coating in damaged areas in accordance with instructions recommended by the paint manufacturer.
      b. When shop applied coating does not match field coating on adjacent piping, or when damage has occurred to the shop applied coating that requires more than touchup, blast clean valve surfaces or utilize other surface preparation recommended by the manufacturer of the coating material and apply the coating system used for coating adjacent piping.

2.08 SHIPMENT, SPARE PARTS, MAINTENANCE PRODUCTS, AND SPECIAL TOOLS

A. As specified in Section 01600 - Product Requirements.

PART 3 EXECUTION

3.01 INSTALLATION

A. Install valves as specified in Section 15110 - Common Work Results for Valves and the manufacturer's instructions.
   1. Unless differently indicated on the Drawings install valves so that in the closed position the pressure in the pipeline applies a seating head on the valves.
   2. Install valves so that in the open position the plug is located in the top half of the valve body.

3.02 COMMISSIONING

A. As specified in Section 01756 - Commissioning and this Section.

B. Manufacturer services:
   1. Provide certificates:
      a. Manufacturer's Certificate of Installation and Functionality Compliance.

B. Functional testing:
   2. Valves:
      a. Test witnessing: Witnessed.
      b. Conduct pressure and leak test as specified in Section 15110 - Common Work Results for Valves.

END OF SECTION

SECTION 15121

PIPE COUPLINGS

PART 1 GENERAL

1.01 SUMMARY

A. Section includes:
   1. Pipe couplings for ductile iron piping.
   2. Pipe couplings for stainless steel piping.

1.02 REFERENCES

A. American National Standards Institute (ANSI).

B. American Society of Mechanical Engineers (ASME):
   1. B31.1 - Power Piping.
   2. B31.9 - Building Services Piping.

C. American Water Works Association (AWWA):
   1. C111 - Standard for Rubber-Gasket Joints for Ductile-Iron Pressure Pipe and Fittings.

D. ASTM International (ASTM):
   1. A449 - Standard Specification for Hex Cap Screws, Bolts and Studs, Steel, Heat Treated, 120/105/9 ksi Minimum Tensile Strength, General Use.
   2. A536 - Standard Specification for Ductile Iron Castings.
   3. C1173 - Standard Specification for Flexible Transition Couplings for Underground Piping Systems.
   4. F593 - Standard Specification for Stainless Steel Bolts, Hex Cap Screws, and Studs.

1.03 SUBMITTALS

A. Submit as specified in Section 01330 - Submittal Procedures.

B. Product data:
   1. For each product in this Section as applicable:
      a. Design features.
      b. Load capacities.
      c. Material designations by UNS alloy number or ASTM Specification and Grade.
      d. Data needed to verify compliance with the Specifications.
      e. Catalog data.
      f. Clearly mark submittal information to show specific items, materials, and accessories or options being furnished.

1.04 WARRANTY

A. Provide warranty as specified.

PART 2 PRODUCTS

2.01 GENERAL

A. Known acceptable manufacturers are listed by specific products.

B. Provide references as specified in this Section by specific product.

C. Manufacturer's representatives requirements as specified in Section 01756 - Commissioning and this Section by specific product.

D. Gaskets for flexible couplings and flanged coupling adapters:
   1. Provide gasket materials for piping applications as follows:
      a. All other piping applications: Neoprene rubber or Buna-N.

E. Exterior coatings for underground and submerged applications:
   1. Manufacturers: One of the following or equal:
      a. Tapecoat Co., Inc., T.C. Mastic.
      b. Kop-Coat Co., Inc., Bitumastic Number 50.
   2. Thickness: Minimum 0.040 inch.

2.02 PIPE COUPLINGS FOR DUCTILE IRON PIPING

A. Dismantling joints:
   1. Manufacturers: One of the following or equal:
      a. Romac Ind., Inc., Style DJ400.
      b. Smith-Blair, Inc., Series 975.
   2. Materials:
      a. Flanged spool: AWWA C207 steel pipe:
         1) ASTM A53 for sizes 3 inches to 12 inches.
         2) ASTM A36 for sizes 14 inches to 72 inches.
      b. End ring and body:
         1) For sizes 3 inches to 12 inches, ductile iron in accordance with ASTM A536.
         2) For sizes 14 inches to 72 inches, steel in accordance with ASTM A36 or A53.
      c. Follower ring: Ductile iron in accordance with ASTM A536.
      d. Bolts and hex nuts:
         1) Aboveground: High strength, low alloy steel in accordance with AWWA C111.
         2) Buried and underwater: Type 316 stainless steel bolts in accordance with ASTM F593.
      e. Tie rods: High tensile steel in accordance with ASTM A193 Grade B7.
   3. Flange design: Class D steel ring flange in accordance with AWWA C207, compatible with ANSI Class 125 and 150 bolt circles.
   4. Coating and lining: Manufacturer's standard fusion bonded epoxy.

B. Flanged coupling adapters: 12-inch size and smaller:
   1. Manufacturers: One of the following or equal:
      a. Dresser, Inc., Style 227.
      b. Romac Ind., Inc., Style FCA501.
      c. Smith-Blair, Inc., Series 912.
   2. Materials:
      a. Flanged body: Ductile iron in accordance with ASTM A536.
      b. Follower ring: Ductile iron in accordance with ASTM A536.
      c. Bolts and hex nuts:
         1) Aboveground: High strength, low alloy steel in accordance with AWWA C111.
   3. Flange design: Class D steel ring flange in accordance with AWWA C207 compatible with ANSI Class 125 and 150 bolt circles.
   4. Coating and lining: Manufacturer's standard fusion bonded epoxy.

C. Flanged coupling adapters: Greater than 12-inch size:
   1. Manufacturers: One of the following or equal:
      a. Dresser, Inc., Style 128-W.
      b. Romac Ind., Inc., Style FC400.
      c. Smith-Blair, Inc., Series 913.
   2. Materials:
      a. Flange and flanged body: Ductile iron or low carbon steel having a minimum yield strength of 30,000 pounds per square inch.
      b. Follower ring: Low carbon steel having a minimum yield strength of 30,000 pounds per square inch.
      c. Bolts and hex nuts:
         1) Aboveground: High strength, low alloy steel in accordance with AWWA C111.
         2) Buried and underwater: Type 316 stainless steel bolts in accordance with ASTM F593.
   3. Flange design: Class D steel ring flange in accordance with AWWA C207 compatible with ANSI Class 125 and 150 bolt circles.
   4. Coating and lining: Manufacturer's standard fusion bonded epoxy, NSF 61 certified.

D. Flexible couplings:
   1. Manufacturers: One of the following or equal:
      a. Dresser, Inc., Style 253.
      b. Romac Ind., Inc., Style 501.
      c. Smith-Blair, Inc., Series 441.
   2. Materials:
      a. Center rings: Ductile iron in accordance with ASTM A536.
      b. Follower rings: Ductile iron in accordance with ASTM A536.
      c. Bolts and hex nuts:
         1) Aboveground: High strength, low alloy steel in accordance with AWWA C111.
         2) Buried and underwater: Type 316 stainless steel in accordance with ASTM F593.
   3. Coating and lining: Manufacturer's standard fusion bonded epoxy.

4. Center sleeve dimensions: Provide center sleeves with lengths in accordance with following table:

Nominal Pipe Size	Sleeve Length
3 inch and smaller	Manufacturer's standard
4 inch through 8 inch	7 inches
10 inch through 14 inch	12 inches
Greater than 16 inch	Use steel flexible coupling per Pipe Couplings for Steel Piping

E. Flexible couplings (Gravity Flow):
   1. Manufacturers: One of the following or equal:
      a. Fernco Flexible Coupling.
   2. Materials:
      a. In accordance with ASTM D5926, C1173 and applicable portions of ASTM C443, C425, C564, and D1869.
   3. Requirements:
      a. In underground and underwater installations, couplings shall be corrosion resistant or coated with a fusion applied epoxy coating in accordance with AWWA C213.
      b. Bolts and hardware shall be stainless steel 18-8 type 316 epoxy coated alloy hardware.

F. Restrained flange coupling adapter:
   1. Manufacturers: One of the following or equal:
      a. Romac Ind., Inc., Style RFCA.
      b. Star Pipe Products, 3200 StarFlange™.
   2. Materials:
      a. Flange and flanged body: Ductile iron in accordance with ASTM A536.
      b. Follower ring: Lug type restraint system.
         1) Follower ring: Ductile iron in accordance with ASTM A536.
         2) Restraining lugs: Ductile iron in accordance with ASTM A536.
            a) Designed to contact the pipe and apply forces evenly.
         3) Restraining bolts:
            a) Ductile iron in accordance with ASTM A536.
            b) Bolt heads shall be designed to twist off when the proper torque has been applied.
      c. Bolts and hex nuts:
         1) Aboveground: High strength, low alloy steel in accordance with AWWA C111.
   3. Flange design: Class D steel ring flange in accordance with AWWA C207 compatible with ANSI Class 125 and 150 bolt circles.
   4. Coating and lining: Manufacturer's standard fusion bonded epoxy.
   5. Angular deflection: Restrained flange coupling adapter must allow angular deflection after assembly.

G. Grooved joint couplings:
   1. Manufacturers: The following or equal:
      a. Victaulic Co., Series 31 or equal.
   2. Materials:
      a. Housings: Ductile iron in accordance with ASTM A536.
      b. Gasket:
         1) FlushSeal® type, or equal. Elastomer in accordance with ASTM D2000.
         2) Neoprene or BUNA-N.
      c. Bolts and nuts: Electroplated steel in accordance with ASTM A449.
      d. Coating: As specified in Section 09960 - High-Performance Coatings.
   3. For use with rigid or flexible radius grooved components in accordance with AWWA C606.
   4. For connection to IPS steel pipe sizes, Victaulic Style 307.

2.03 PIPE COUPLINGS FOR CARBON STEEL PIPING (NOT USED)

2.04 PIPE COUPLINGS FOR STAINLESS STEEL PIPING (NOT USED)

PART 3 EXECUTION

3.01 INSTALLATION

A. Joints and flexible connections shall be installed centered with no angular deflection unless otherwise indicated on the Drawings.

B. Flexible couplings and flange coupling adapters: Install with gap between pipe ends in accordance with the following table unless a greater gap is indicated on the Drawings. Maximum gap tolerance shall be within 1/8 inch.
   1. Install flexible coupling with pipe gap located in middle of center sleeve.
   2. Install flanged coupling adapter with end of plain end pipe in middle of flanged coupling body.

Center Ring Length	Gap Dimension and Tolerance
4 inch through 6 inch	3/8 inch
7 inch	5/8 inch
10 inch and greater	7/8 inch

C. Bolted, split-sleeve couplings:
   1. Inspect each coupling to insure that there are no damaged portions of the coupling.
      a. Pay particular attention to the sealing pad/sealing plate area.
      b. Before installation, thoroughly clean each coupling of any foreign substance which may have collected thereon and shall be kept clean at all time.

2. Wrenches:
    a. Conform to manufacturer instructions.
    b. Bolts and studs shall be tightened so as to secure a uniform gasket compression between the coupling and the body of the pipe with all bolts or studs tightened approximately the same amount.
    c. Final tightening shall be done by hand (no air impact wrenches) and is complete when the coupling is in uniform contact with the outside surface of the pipe all around the circumference of the pipe.
3. No joint shall be misfit in any plane.
4. On the fixed ends of bolted, split-sleeve couplings, the shoulders shall bear on the restraint rings all around with no visible gap.
5. Ends of piping where coupler are installed shall be smooth and free of defects.
    a. Remove weld splatter and grind smooth.
    b. Grind pipe seam welds flush with pipe wall and smooth.

END OF SECTION

SECTION 15211

DUCTILE IRON PIPE: AWWA C151

PART 1 GENERAL

1.01 SUMMARY

A. Section includes: Ductile iron pipe, joints, connections, fittings, and pipe linings and coatings.

B. As specified in Section 15052 - Common Work Results for General Piping.

1.02 REFERENCES

A. American Society of Mechanical Engineers (ASME):
   1. B16.1 - Gray Iron Pipe Flanges and Flanged Fittings: Classes 25, 125, and 250.

B. American Water Works Association (AWWA):
   1. C104 - Standard for Cement-Mortar Lining for Ductile-Iron Pipe and Fittings.
   2. C105 - Polyethylene Encasement for Ductile-Iron Pipe Systems.
   3. C110 - Standard for Ductile-Iron and Gray-Iron Fittings.
   4. C111 - Standard for Rubber-Gasket Joints for Ductile-Iron Pressure Pipe and Fittings.
   5. C150 - Standard for Thickness Design of Ductile-Iron Pipe.
   6. C151 - Standard for Ductile-Iron Pipe, Centrifugally Cast.
   7. C606 - Standard for Grooved and Shouldered Joints.

C. American Welding Society (AWS):
   1. D11.2 - Guide for Welding Iron Castings.

D. ASTM International (ASTM):
   1. A536 - Standard Specifications for Ductile Iron Castings.
   2. B1000 - Standard Practices for Casting Preparation and Test Procedure of Porcelain Enamel-Lined Pipe, Fittings, and Valves for Use in the Municipal Wastewater, Sewage, and Water Treatment Industry.
   3. C33 - Standard Specification for Concrete Aggregates.
   4. C150 - Standard Specification for Portland Cement.
   5. C283 - Standard Test Methods for Resistance of Porcelain Enameled Utensils to Boiling Acid.
   6. D792 - Standard Test Methods for Density and Specific Gravity (Relative Density) of Plastics by Displacement.
   7. D4541 - Standard Test Method for Pull-Off Strength of Coatings Using Portable Adhesion Testers.

E. Ductile Iron Pipe Research Association (DIPRA):
   1. Thrust Restraint Design Manual.

F. International Organization for Standardization (ISO):
   1. 8179 - Ductile iron pipe, fittings, accessories and their joints - External zinc-based coating – Part 1: Metallic zinc with finishing layer.

G. National Association of Pipe Fabricators, Inc. (NAPF):
   1. 500-03 - Surface Preparation Standard for Ductile Iron Pipe and Fittings in Exposed Locations Receiving Special External Coatings and/or Special Internal Linings.

H. Society for Protective Coatings (SSPC):
   1. SP 5 - White Metal Blast Cleaning.
   2. SP 10 - Near White Wet Blast.
   3. SP 11 - Bare Metal Power Tool Cleaning.
   4. PA-2 - Measurement of Dry Coating Thickness With Magnetic Gages.
   5. QP 1 - Industrial Contractor Qualification.

1.03 SUBMITTALS

A. Submit as specified in Section 01330 - Submittal Procedures.

B. Product data.

C. Manufacturer's qualifications.
   1. Manufacturer qualifications and list of projects using the specified material: 5 years minimum.

D. Manufacturer's Quality Assurance Manual:
   1. Submit manufacturer's coating and lining application quality assurance manual to Engineer prior to beginning coating application.
      a. Strict conformance to the requirements of the manual will be required.
      b. Deviation from the requirements of the manual will be grounds for the Engineer to reject the applied coating.

E. Shop drawings:
   1. Detailed layout drawings showing alignment of pipes, location of valves, fittings, and appurtenances, types of joints, and connections to pipelines or structures.
   2. Thrust restraint systems.
   3. Photographs, drawings, and descriptions of fittings, gaskets, couplings, grooving of pipe and fittings.

F. Calculations:
   1. Calculations for thrust restraint system design.

G. Manufacturer's Certificate of Source Testing for ceramic epoxy, glass lined, plural component polyurethane, and zinc materials:
   1. Certify successful performance of holiday detection tests on 100 percent of lining in accordance with ASTM B1000.
   2. Identify each test piece by mark designation and show the actual test results during the final inspection by manufacturer prior to shipment.
   3. Zinc coating: Regular measurements in accordance with ISO 8179 Part 4.4.
   4. Include Coating Manufacturer’s Technical Representative’s reports.

1.04 QUALITY ASSURANCE

A. Ductile iron pipe shall be supplied by a single manufacturer.

B. Hydrostatically test each joint of ductile iron pipe in accordance with AWWA C151.

C. Pre-installation meeting:
   1. Arrange for Coating Manufacturer's Technical Representative to attend preconstruction conferences, and to make periodic visits to factory or shop to inspect surface preparation of pipe, fittings, and accessories; and to inspect application of linings to interior and coatings to exterior of pipe, fittings, and accessories.

1.05 DELIVERY, STORAGE, AND HANDLING

A. Block piping and associated fittings for shipment to prevent damage to coatings and linings.

B. Carefully handle piping and associated fittings during loading, unloading, and installation:
   1. Do not drop piping material from cars or trucks.
   2. Lower piping by mechanical means.
   3. Do not drop or pound pipe to fit grade.

C. Handle pipe from the outside if lined with ceramic epoxy, glass or plural component polyurethane.
   1. No forks, chains, straps, hooks, or other lifting device shall be placed inside the pipe or fittings for lifting, positioning, or laying.

D. Protect gaskets and polyethylene encasement from long-term exposure to sunlight.

E. Store piping, fittings, and other accessories such that they do not accumulate and hold rainwater, dirt, and debris.

PART 2 PRODUCTS

2.01 MANUFACTURED UNITS

A. Ductile iron piping:
   1. Manufacturers: One of the following or equal:
      a. American Cast Iron Pipe Co.
      b. McWane Ductile.
      c. SIP Industries.
      d. U.S. Pipe.

2.02 DUCTILE IRON JOINTS AND CONNECTIONS

A. General:
   1. Pressure class or special thickness class as indicated in the Piping Schedule provided in Section 15052 - Common Work Results for General Piping.

2. In accordance with AWWA C150 and AWWA C151.
3. Joints:
    a. Flanged.
    b. Grooved.
    c. Mechanical.
    d. Push-on Rubber Gasket.
    e. Integrally Restrained Mechanical.
    f. Mechanical Wedge Action.
    g. Integrally Restrained Push-On.
    h. Push-On Joint Restraint Harness.
4. Connections:
    a. Tapping saddle.
    b. Tapping sleeve.
    c. Welded outlet.
5. Fittings.

B. Joints:
1. Flanged joints:
    a. Screw-on flanges:
        1) Comply with the diameter, thickness, drilling, and other characteristics in accordance with ASME B16.1.
        2) Ductile iron.
        3) Long hub, threaded, and specially designed for ductile iron pipe.
        4) After attaching to pipe, machine flange face to make pipe end and flange even and perpendicular to the axis of the pipe.
    b. Bolt holes on flanges: 2-holed and aligned at both ends of pipe.
    c. Cap screw or stud bolt holes: Tapped.
    d. Bolts and nuts:
        1) As specified in Section 15052 - Common Work Results for General Piping.
    e. Gaskets:
        1) Standard styrene butadiene copolymer (SBR) unless specified otherwise in Section 15052 - Common Work Results for General Piping.
2. Grooved joints:
    a. In accordance with AWWA C606, as complemented and modified below, radius-cut type.
    b. Couplings:
        1) Rigid type, cast from ductile iron in accordance with ASTM A536, Grade 65-45-12.
    c. Bolts and nuts:
        1) As specified in Section 15052 - Common Work Results for General Piping.
    d. Gaskets:
        1) As specified in Section 15052 - Common Work Results for General Piping.
    e. Fittings:
        1) In accordance with AWWA C606, rigid radius-cut groove:
        2) Center-to-center dimensions: In accordance with AWWA C110.
        3) Wall thickness and other characteristics: In accordance with AWWA C606.

f. Flanged unit connections:
    1) Flanged to grooved joint adapters or a long enough spool with one end flanged and the other end grooved to prevent interference with the operation of adjacent valves, pumps, or other items.

3. Mechanical joints:
    a. In accordance with AWWA C111.
    b. Gaskets:
        1) As specified in Section 15052 - Common Work Results for General Piping.
    c. Bolts and nuts, including T-bolts:
        1) As specified in Section 15052 - Common Work Results for General Piping.
4. Push-on rubber gasket joints:
    a. In accordance with AWWA C111.
    b. Gaskets:
        1) As specified in Section 15052 - Common Work Results for General Piping.
5. Integrally restrained mechanical joints:
    a. Manufacturers: Where restrained mechanical joints are required, use one of the following or equal:
        1) American Cast Iron Pipe Co., MJ Coupled Joint.
        2) U.S. Pipe, Bolt-Lok.
        3) U.S. Pipe, Mech-Lok.
    b. Application:
        1) Where designated mechanical restraint.
        2) Mechanical joint is specified in the Piping Schedule provided in Section 15052 - Common Work Results for General Piping, supply a restrained mechanical joint piping system, which includes restrained mechanical joints where necessary based upon thrust calculations.
        3) Standard mechanical joints as specified above can be used where thrust calculations demonstrate restraint is not required.
    c. Design:
        1) Integral retainer weldment type or lugged type joint with Type 304 stainless steel rods and nuts.
        2) Restrained mechanical joints of the configuration which utilizes a gripping or friction force for restraint will not be acceptable.
    d. Gaskets:
        1) As specified in Section 15052 - Common Work Results for General Piping.
    e. Bolts and nuts, including T-bolts:
        1) As specified in Section 15052 - Common Work Results for General Piping.
6. Mechanical wedge action joint restraints:
    a. Manufacturers: One of the following or equal:
        1) EBAA Iron, Inc., Megalug® Series 1100.
        2) Star Pipe Products, Split Stargrip Series 3000.
        3) Sigma Corp., One-Lok Model SLDE.
    b. Materials:
        1) Gland body:
            a) Ductile iron in accordance with ASTM A536.

2) Wedges and wedge actuating components:
    a) Ductile iron in accordance with ASTM A536.
    b) Wedges shall be heat treated to a minimum of 370 BHN.
3) Actuating bolts and nuts:
    a) Ductile iron in accordance with ASTM A536.
    b) Provide torque-limiting twist off components to ensure proper installation.
4) Gaskets:
    a) As specified in Section 15052 - Common Work Results for General Piping.

c. Coatings:
1) Provide manufacturer applied coating system.
2) Manufacturers: One of the following or equal:
    a) EBAA Iron Inc., Mega-Bond.
    b) Star Pipe Products, Star-Bond.
    c) Sigma Corp., Corrsafe™ Electro-deposition coating.

d. Working pressure:
1) Shall include a minimum safety factor of 2:1.
2) For sizes 3- through 16-inch: 350 pounds per square inch.
3) For sizes 18- through 48-inch: 250 pounds per square inch.

e. Restraint shall consist of multiple gripping wedges incorporated into a follower gland meeting the requirements of AWWA C111.

f. Restraint shall allow post assembly angular deflection that is a minimum of 50 percent of the angular deflection allowed by the mechanical joint.

g. Restraint must be in accordance with applicable requirements of AWWA C110 and AWWA C111 for mechanical joints.

7. Integrally restrained push-on joints:
a. Application:
1) Where designation restrained push-on is specified in the Piping Schedule provided in Section 15052 - Common Work Results for General Piping, supply a restrained push-on joint piping system, which includes restrained push-on joints where necessary based upon thrust calculations.
2) Standard push-on rubber gasket joints as specified above can be used where thrust calculations demonstrate restraint is not required.

b. Design:
1) Restrained push-on joints of the configuration which utilizes a gripping or friction force for restraint will not be acceptable.
2) Suitable for the following working pressures:
    a) For 4- through 24-inch pipe: 350 pounds per square inch gauge.
    b) For 30- through 54-inch pipe: 250 pounds per square inch gauge.

c. Gaskets:
1) As specified in Section 15052 - Common Work Results for General Piping.

d. Manufacturers: One of the following or equal:
1) U.S. Pipe, TR Flex.
2) McWane Ductile, TR Flex.
3) American Cast Iron Pipe Co., Flex Ring or Lok-Ring.

e. Limit buried joints to half the manufacturer's published allowable angular joint deflection for purposes of pipeline alignment and elimination of fittings.

C. Connections:
   1. Tapping saddle as specified in Owner standard specification.
      a. If Owner does not have a standard specification, provide tapping saddles as manufactured by Smith-Blair (Style 317), Romac Industries, Inc. (Style 202S), or equal.
   2. Tapping sleeve as specified in Owner standard specification.
      a. If Owner does not have a standard specification, provide tapping sleeves as manufactured by Smith-Blair (Style 622), Romac Industries, Inc. (Style FTS 420), or equal.

D. Fittings:
   1. Ductile iron in accordance with AWWA C110 or AWWA C153.
   2. Joint type:
      a. Same as that of the associated piping as specified in Section 15052 - Common Work Results for General Piping.
   3. Plain end-to-flanged joint connectors using setscrews are not acceptable.

2.03 CERAMIC EPOXY

A. Line pipe with ceramic epoxy.

B. Manufacturers: One of the following or equal:
   1. PROTECTO 401.
   2. SP-2000W.

C. Material:
   1. Amine cured Novolac epoxy containing at least 20 percent by volume of ceramic quartz pigment.

D. Application:
   1. The lining shall only be applied by a manufacturer-authorized representative with no less than 5 years of experience in applying the specified material.
   2. The application of the lining shall be performed in accordance with manufacturer's published specifications.
   3. Pipe and fittings shall be delivered to application facility with no interior lining.
   4. Interior of pipe shall be abrasive blasted in accordance with manufacturer instructions.
   5. Apply lining in accordance with manufacturer instructions.
   6. Minimum dry film thickness (DFT): 40 mills.

E. Coverage:
   1. Gasket and spigot ends on joints:
      a. Minimum coverage using joint compound: 6 mils.
      b. Maximum coverage using joint compound: 10 mils.
   2. Mechanical joints:
      a. Extend lining from spigot end to edge of gauging ring.
   3. Number of coats:
      a. In accordance with manufacturer instructions.

F. Source quality control:
   1. Test pipe and fitting lining with a magnetic film thickness gauge in accordance with SSPC PA-2 Film Thickness Rating.
   2. Test lining integrity of pipes in accordance with coating manufacturer instructions using a holiday detection testing instrument set at the specified voltage.
   3. Discard pipe or reline pipe when pinholes or discontinuities are found.
   4. Repair holidays with joint compound in accordance with coating manufacturer instructions and re-test.

PART 3 EXECUTION

3.01 INSTALLATION

A. General:
   1. Install ductile iron piping in accordance with AWWA C600, or as modified in Section 15052 - Common Work Results for General Piping.
   2. For underground piping, the trenching, backfill, and compaction:
      a. Inspect coating prior to backfill.

B. Joints:
   1. Install types of joints as specified in the piping schedule provided in Section 15052 - Common Work Results for General Piping.
   2. Mechanical joints are not acceptable in above ground applications.
   3. Field closure for restrained push-on pipe:
      a. Locate field closures in areas where thrust calculations demonstrate restraint is not required.
   4. Grooved joints:
      a. Install piping with grooved joints where specified in the piping schedule as specified in Section 15052 - Common Work Results for General Piping.
      b. Assemble grooved joints in accordance with manufacturer's published instructions.
      c. Support grooved-end pipe in accordance with manufacturer's published instructions.
         1) Install at least 1 support between consecutive couplings.

C. Connection:
1. Tapping ductile iron pipe:
a. Direct tapping of ductile iron pipe may be performed but is limited to the following conditions:
1) Maximum allowable tap diameter by pipe diameter and pressure class:

Pipe Size (inches)	Pressure Class				
	150	200	250	300	350
	Maximum Allowable Direct Tap Size (inches)				
3	-	-	-	-	3/4
4	-	-	-	-	3/4
6	-	-	-	-	1
8	-	-	-	-	1
10	-	-	-	-	1
12	-	-	-	-	1-1/4
14	-	-	1-1/4	1-1/2	1-1/2
16	-	-	1-1/2	2	2
18	-	-	2	2	2
20	-	-	2	2	2
24	-	2	2	2	2

b. The maximum allowable tap diameter for pipelines greater than 24 inches is 2 inches.
c. 2 layers of 3-mil thread sealant are required to minimize the torque required to effect a watertight connection.

3.02 DEFECTS IN COATINGS EXCEPT TAPE WRAP AND CEMENT MORTAR COATING

A. Engineer will identify defective coating to be field repaired in accordance with the applicable AWWA standard.
1. Pipe joints exceeding the following defect maximum will be rejected.
a. Minor defects:
1) No more than 1.5 per 100 square feet of surface area.
2) 2 or more minor repairs within an 8-inches diameter circle will be considered a single repair.
3) Repairs for adhesion testing will not be included in the total number of repairs.
4) Repair in accordance with manufacturer's requirements.
b. Major defects:
1) No more than 3 major repairs on each pipe joint.
2) No more than 30 percent repairs on the pipe surface area with defects.

2. Minor repairs:
    a. Repairs less than 8 inches in the greatest dimension.
    b. Repair in accordance with manufacturer's requirements.
3. Major repairs:
    a. Repairs that exceed 8 inches in the greatest dimension.
    b. Repair in accordance with manufacturer's requirements.

3.03 FIELD QUALITY CONTROL

A. Testing ductile iron piping:
    1. Test as specified in Section 15052 - Common Work Results for General Piping and Section 15956 - Piping Systems Testing.

B. Repair damaged cement mortar lining to match quality, thickness, and bonding of original lining in accordance with AWWA C104.
    1. When lining cannot be repaired or repairs are defective, replace defective piping with undamaged piping.

C. Verify that interior surfaces of ceramic epoxy and glass lined pipe and fittings have continuous coverage:
    1. Test random samples, as directed by Engineer, in accordance with ASTM B1000.
    2. Discard lined piping and fittings found to have pinholes, crazing, or fish scales, which expose the metal substrate.

END OF SECTION

SECTION 15241

HIGH DENSITY POLYETHYLENE (HDPE) PIPE: AWWA C906

PART 1 GENERAL

1.01 SUMMARY

A. Section includes: High Density Polyethylene Pipe (HDPE), and fittings, 4-inch through 63-inch size.

1.02 REFERENCES

A. American Water Works Association (AWWA):
   1. C906 – Standard for Polyethylene (PE) Pressure Pipe and Fittings, 4 in. Through 63 in., for Water Distribution.

B. ASTM International (ASTM):
   1. D1238 - Standard Test Method for Melt Flow Rates of Thermoplastics by Extrusion Plastometer.
   2. D1505 - Standard Test Method for Density of Plastics by the Density-Gradient Technique.
   3. D1599 - Standard Test Method for Resistance to Short-Time Hydraulic Pressure of Plastic Pipe, Tubing, and Fittings.
   4. D1603 - Standard Test Method for Carbon Black Content in Olefin Plastics.
   5. D2122 - Standard Test Method for Determining Dimensions of Thermoplastic Pipe and Fittings.
   6. D2290 - Standard Test Method for Apparent Hoop Tensile Strength of Plastic or Reinforced Plastic Pipe by Split Disk Method.
   7. D3261 - Standard Specification for Butt Heat Fusion Polyethylene (PE) Plastic Fittings for Polyethylene (PE) Plastic Pipe and Tubing.
   8. D3350 - Standard Specification for Polyethylene Plastic Pipe and Fittings Material.
   9. F645 - Standard Guide for Selection, Design, and Installation of Thermoplastic Water-Pressure Piping Systems.
   10. F714 - Standard Specification for Polyethylene (PE) Plastic Pipe (SDR-PR) Based on Outside Diameter.

C. International Organization of Standardization (ISO):
   1. 10863 - Non-destructive testing of welds - Ultrasonic testing - Use of time-of-flight diffraction technique (TOFD).

D. Plastic Pipe Institute (PPI):
   1. PE 4710.

1.03 ABBREVIATIONS

A. HDPE: High-density polyethylene.

B. ID: Inside diameter of piping or tubing.

C. OD: Outside diameter.

D. SDR: Standard dimension ratio.

1.04 SUBMITTALS

A. Submit as specified in Section 01330 - Submittal Procedures.

B. Shop drawings:
   1. Detailed layout drawings showing alignment of pipes, location of valves, fittings, and appurtenances, types of joints, and connections to pipelines or structures.

C. Product data: As specified in Section 15052 - Common Work Results for General Piping:
   1. Describe materials and installation equipment including fusion machine.
      a. Include optimum range of fusion conditions such as fusion temperature, interface pressure, and cooling time.
   2. Pipe loads and structural calculations.
   3. Installation instructions.

D. Qualifications of installation crew for high-density polyethylene pipe including qualifications of the fusion machine technician. Furnish proof of training in the use of fusion equipment.

1.05 QUALITY ASSURANCE

A. Markings on the pipe shall be in accordance with AWWA C906.

1.06 DELIVERY, STORAGE, AND HANDLING

A. Protect piping materials from sunlight, scoring, and distortion.

B. Do not allow surface temperatures on pipe and fittings to exceed 120 degrees Fahrenheit.

C. Store and handle HDPE pipe and fittings as recommended by manufacturer in published instructions.

PART 2 PRODUCTS

2.01 GENERAL

A. In accordance with AWWA C906.

2.02 MATERIALS

A. Fittings: Same material as the pipe and of equal or greater pressure rating.

2.03 HDPE PIPING

A. General:
   1. Pipe and fittings: High-density polyethylene.
   2. Dimensions of pipe and fittings: Based on controlled outside diameter in accordance with ASTM F714:
      a. SDR: As given in Piping Schedule, in Section 15052 - Common Work Results for General Piping; or, if not given, minimum thickness shall be SDR 9.
      b. Pipe Diameter: DIPS dimensions as specified in Section 15052 - Common Work Results for General Piping Pipe Schedule.
   3. Pipe, fittings, and adapters: Furnished by the same manufacturer, or compatible with components in the same system and with components of other systems to which connected.

B. Materials:
   1. Manufacturers: One of the following or equal:
      a. Performance Pipe (Chevron Phillips Chemical Company): DriscoPlex 4000/4100 Series.
      b. ISCO Industries.
   2. Polyethylene: As listed by the PPI under the designation PE 4710; and have a minimum cell classification, in accordance with ASTM D3350, of 445574C:
      a. Pipe and fittings: Manufactured from material with the same cell classification.
      b. Manufacturer shall certify that pipe and fittings meet the above classifications.
   3. Polyethylene fittings and custom fabrications:
      a. Molded or fabricated.
      b. Butt fusion outlets shall be made to the same outside diameter, wall thickness, and tolerances as the mating pipe.
      c. All fittings and custom fabrications shall be fully rated for the same internal pressure as the mating pipe.
      d. Pressure de-rated fabricated fittings are prohibited.
   4. Molded fittings:
      a. Manufactured in accordance with ASTM D3261, Butt Heat Fusion Polyethylene (PE) Plastic Fittings for Polyethylene (PE) Plastic Pipe and Tubing, and shall be so marked.
      b. Each production lot of molded fittings shall be subjected to the tests required under ASTM D3261.
   5. X-ray inspection: The Manufacturer shall submit samples from each molded fittings production lot to x-ray inspection for voids, and shall certify that voids were not found.
   6. Fabricated fittings:
      a. Made by heat fusion joining specially machined shapes cut from pipe, polyethylene sheet stock, or molded fittings.
      b. Rated for internal pressure service at least equal to the full service pressure rating of the mating pipe.

7. Polyethylene flange adapters:
    a. Flange adapters shall be made with sufficient through-bore length to be clamped in a butt fusion joining machine without the use of a stub-end holder.
    b. The sealing surface of the flange adapter shall be machined with a series of small v-shaped grooves to provide gasketless sealing, or to restrain the gasket against blowout.
8. Back-up rings and flange bolts:
    a. Flange adapters shall be fitted with Type 304 stainless steel back-up rings pressure rated equal to or greater than the mating pipe.
        1) Back-up rings shall be convoluted style for 150-pound bolt hole pattern.
    b. The back-up ring bore shall be chamfered or radiused to provide clearance to the flange adapter radius.
    c. Flange bolts and nuts shall be the same material as backing flange.

2.04 SOURCE QUALITY CONTROL

A. HDPE piping:
1. Manufacturer's quality control: The pipe and fitting manufacturer shall have an established quality control program responsible for inspecting incoming and outgoing materials.
2. Incoming polyethylene materials:
    a. Inspected for density, melt flow rate, and contamination.
    b. The cell classification properties of the material shall be certified by the supplier and verified by manufacturer's quality control.
    c. Approved by quality control before processing into finished goods.
3. Outgoing materials shall be checked for:
    a. Outside diameter, wall thickness, and eccentricity in accordance with ASTM D2122 at a frequency of at least once per hour.
    b. Out of roundness at a frequency of at least once per hour.
    c. Straightness, inside and outside surface finish, markings and end cuts shall be visually inspected in accordance with ASTM F714 on every length of pipe:
        1) Quality control shall verify production checks and test for:
            a) Density in accordance with ASTM D1505 at a frequency of at least once per extrusion lot.
            b) Melt Index in accordance with ASTM D1238 at a frequency of at least once per extrusion lot.
            c) Carbon content in accordance with ASTM D1603 at a frequency of at least once per day in accordance with extrusion line.
            d) Quick burst pressure in accordance with ASTM D1599 at a frequency of at least once per day per line.
            e) Ring Tensile Strength in accordance with ASTM D2290 at a frequency of at least once per day per line.
    d. X-ray inspection shall be used to inspect molded fittings for voids, and knit line strength shall be tested. All fabricated fittings shall be inspected for joint quality and alignment.
4. Permanent records: The manufacturer shall maintain permanent QC and QA records.

5. Compliance tests:
    a. Manufacturer's inspection and testing of the materials.
        1) In case of conflict with manufacturer's certifications, the Contractor, Engineer, or Owner may request retesting by the manufacturer or have retests performed by an outside testing service.
        2) All retesting shall be at the requestor's expense and shall be performed in accordance with this Section.

PART 3 EXECUTION

3.01 INSTALLATION

A. General:
    1. Where not otherwise specified, install piping in accordance with ASTM F645, or manufacturer's published instructions for installation of piping, as applicable to the particular type of piping.
    2. Provide molded transition fittings for transitions from HDPE to metal or IPS pipe. Do not thread or solvent weld HDPE pipe.

B. Installation of HDPE piping:
    1. Joining:
        a. Heat fusion joining:
            1) Joints between plain end pipes and fittings shall be made by butt fusion, and joints between the main and saddle branch fittings shall be made utilizing saddle fusion employing only procedures that are recommended by the pipe and fitting manufacturer.
            2) The Contractor shall certify, in writing, that persons making heat fusion joints have received training in the manufacturer's recommended procedure and have had at least 3 years current experience in the heat fusion butt welding process.
            3) The Contractor shall maintain records of trained personnel and shall certify that training was received not more than 12 months before commencing construction.
            4) External and internal beads shall not be removed.
        b. Heat fusion training services: The manufacturer shall provide training in the manufacturer's recommended butt fusion and saddle fusion procedures to the Contractor's installation personnel, and to the inspector(s) representing the Owner, prior to the start of construction.
        c. Mechanical joining:
            1) Unless otherwise indicated on the Piping Schedule, HDPE pipe and fittings may be joined together or to other materials by means of flanged connections (flange adapters and back-up rings) or, where specifically indicated on the Drawings, flexible couplings designed for joining polyethylene pipe or for joining polyethylene pipe to another material.
            2) Flexible couplings shall be fully pressure rated and fully thrust restrained such that when installed in accordance with manufacturer's recommendations, a longitudinal load applied to the mechanical coupling will cause the pipe to yield before the mechanical coupling disjoins.

2. Installation:
    a. General:
        1) The Manufacturer shall package products for shipment in a manner suitable for safe transport by commercial carrier.
        2) When delivered, a receiving inspection shall be performed, and any shipping damage shall be reported to the Manufacturer within 7 days.
        3) Damaged pipe shall be promptly removed from the job site.
        4) Installation shall be in accordance with Manufacturer's recommendations, and this specification.
        5) Prior to making a terminal connection of each individual run of HDPE pipe, the temperature of the pipe should be allowed to approach the service temperature at which the pipe is intended to operate.
        6) All necessary precautions shall be taken to ensure a safe working environment in accordance with applicable codes and standards.
    b. Large diameter fabricated fittings (greater than 16-inch): Fabricated fittings shall be butt fused to the end of a pipe.
    c. Mechanical joint and flange installation:
        1) Mechanical joints and flange connections shall be installed in accordance with the manufacturer's recommended procedure.
        2) Flange faces shall be centered and aligned to each other before assembling and tightening bolts.
        3) Every effort shall be made to ensure that the opposing faces of the flange assemblies mate up securely at a temperature approximately the same as the service temperature.
        4) In no case shall the flange bolts be used to draw the flanges into alignment.
        5) Bolt threads shall be lubricated, and flat washers shall be fitted under the flange nuts.
        6) Bolts shall be evenly tightened according to the tightening pattern and torque step recommendations of the manufacturer.
        7) At least 1 hour after initial assembly, flange connections shall be re-tightened following the tightening pattern and torque step recommendations of the manufacturer.
        8) The final tightening torque shall be 100 feet-pounds or less as recommended by the manufacturer.
    d. Pipe handling:
        1) Lift, move, or lower pipe and fittings only with wide fabric choker slings.
        2) Wire rope or chain shall not be used.
        3) Slings shall be of sufficient capacity for the load, and shall be inspected before use.
        4) Worn or defective equipment shall not be used.
    e. Excavation, backfill material and backfilling and compacting:

3.02 FIELD QUALITY CONTROL

A. Butt fusion testing on pipe size 14 inches and larger:
   1. The first fusion of each day shall be a trial fusion.
      a. The trial fusion shall be allowed to cool completely.
      b. Fusion test straps shall be cut out.
         1) The test strap shall be 12 inches (minimum) or 30 times the wall thickness in length with the fusion in the center, and 1 inch (minimum) or 1.5 times the wall thickness in width.
      c. Bend the test strap until the ends of the strap touch.
   2. If the fusion fails at the joint, a new trial fusion shall be made, cooled completely and tested.
   3. Butt fusion of pipe to be installed shall not commence until a trial fusion has passed the bent strap test.

B. Data logging and test data:
   1. A data logger shall be installed on the fusion heated joining machine. Data on each joint shall be recorded by the data logger. Data to be recorded shall be minimum temperature of joint fusion and interface pressure of the fused joint.
   2. Recorded data from the fusion data logger and the TOFD shall be transmitted to the Owner daily.

C. Pressure testing:
   1. Test pressures as specified in the Piping Schedule in Section 15052 - Common Work Results for General Piping.
   2. Temperature of test water shall be no more than 73 degrees Fahrenheit.

END OF SECTION

SECTION 15249

POLYVINYL CHLORIDE (PVC) PIPE: SCHEDULE TYPE

PART 1 GENERAL

1.01 SUMMARY

A. Section includes: Schedule type PVC pipe and fittings.

1.02 REFERENCES

A. ASTM International (ASTM):
   1. D1784 - Standard Specification for Rigid Poly(Vinyl Chloride) (PVC) Compounds and Chlorinated Poly(Vinyl Chloride) (CPVC) Compounds.
   2. D1785 - Standard Specification for Poly(Vinyl Chloride) (PVC) Plastic Pipe, Schedules 40, 80 and 120.
   3. D2467 - Standard Specification for Poly(Vinyl Chloride) (PVC) Plastic Pipe Fittings, Schedule 80.
   4. D2564 - Standard Specification for Solvent Cements for Poly(Vinyl Chloride) (PVC) Plastic Piping Systems.
   5. D2855 - Standard Practice for the Two-Step (Primer and Solvent Cement) Method of Joining Poly (Vinyl Chloride) (PVC) or Chlorinated Poly (Vinyl Chloride) (CPVC) Pipe and Piping Components with Tapered Sockets.
   6. F645 - Standard Guide for Selection, Design and Installation of Thermoplastic Water-Pressure Piping Systems.

B. NSF International (NSF):
   1. 61 - Drinking Water System Components - Health Effects.

1.03 SUBMITTALS

A. Submit as specified in Section 01330 - Submittal Procedures.

B. Product data: As specified in Section 15052 - Common Work Results for General Piping.

1.04 DELIVERY, STORAGE, AND HANDLING

A. Protect from sunlight, scoring, and distortion.

B. Do not allow surface temperatures to exceed 120 degrees Fahrenheit.

C. Store and handle as recommended by manufacturer in published instructions.

PART 2 PRODUCTS

2.01 MATERIALS

A. Extruding and molding material: Virgin material containing no scrap, regrind, or rework material except where permitted in the referenced standards.
   1. Pipe: Designation PVC 1120 in accordance with ASTM D1785 and appendices:
      a. Extruded from Type I, Grade 1, Class 12454 material in accordance with ASTM D1784.
      b. Schedule 80 unless otherwise indicated on the Drawings.
   2. Fittings: In accordance with ASTM D2467.
      a. Same material as the pipe and of equal or greater pressure rating.
      b. Supplied by pipe manufacturer.
      c. Unions 4 inches and smaller:
         1) Use socket end screwed unions.
      d. Unions 6 inches and larger:
         1) Use socket flanges with 1/8-inch full-face soft gasket.
            a) Gasket material: EPDM.
   3. Solvent cement:
      a. In accordance with ASTM D2564.
      b. Manufacturers: The following or equal:
         1) IPS Corp.
            a) Primer: Type P70 or another primer certified by the manufacturer for sewer gas service.
            b) Cement: Type 724 or another cement certified by the manufacturer for sewer gas service.
      c. Certified by the manufacturer for the service of the pipe.

2.02 SOURCE QUALITY CONTROL

A. Meets or exceeds all quality assurance test requirements stated in ASTM D1785.

PART 3 EXECUTION

3.01 INSTALLATION

A. Install piping in accordance with ASTM F645, or manufacturer's published instructions for installation of piping, as applicable.

B. Provide molded transition fittings for transitions from plastic to metal pipe.
   1. Do not thread pipe.
   2. Do not use flanged transition fittings unless specifically indicated on the Drawings.

C. Provide flanged transition fittings between FRP and PVC materials for new odor ducts.

D. Locate unions where indicated on the Drawings, and elsewhere where required for adequate access and assembly of the piping system.

E. Provide serrated nipples for transition from pipe to rubber hose.

F. Solvent weld joints in accordance with ASTM D2855.

3.02 FIELD QUALITY CONTROL

A. Test pipe as specified in Section 15052 - Common Work Results for General Piping and Section 15956 - Piping Systems Testing.

END OF SECTION

SECTION 15814

FIBERGLASS REINFORCED PLASTIC DUCTS

PART 1 GENERAL

1.01 SUMMARY

A. Section includes: Requirements for a Fiberglass reinforced plastic (FRP) ductwork system.
   1. Ducts and fittings.
   2. Flexible connections.
   3. Expansion joints.
   4. Supports.

1.02 REFERENCES

A. American Society of Mechanical Engineers (ASME):
   1. RTP-1 - Reinforced Thermoset Plastic Corrosion-Resistant Equipment.

B. American Water Works Association (AWWA):
   1. M45 - Fiberglass Pipe Design.

C. ASTM International (ASTM):
   1. C582 - Standard Specification for Contact-Molded Reinforced Thermosetting Plastic (RTP) Laminates for Corrosion-Resistant Equipment.
   2. D792 - Standard Test Methods for Density and Specific Gravity (Relative Density) of Plastics by Displacement.
   3. D2105 - Standard Test Method for Longitudinal Tensile Properties of Fiberglass (Glass-Fiber-Reinforced Thermosetting-Resin) Pipe and Tube.
   4. D2344 - Standard Test Method for Short-Beam Strength of Polymer Matrix Composite Materials and Their Laminates.
   5. D2412 - Standard Test Method for Determination of External Loading Characteristics of Plastic Pipe by Parallel-Plate Loading.
   6. D2992 - Standard Practice for Obtaining Hydrostatic or Pressure Design Basis for “Fiberglass” (Glass-Fiber-Reinforced Thermosetting-Resin) Pipe and Fittings.
   7. D2996 - Standard Specification for Filament-Wound “Fiberglass” (Glass-Fiber-Reinforced Thermosetting-Resin) Pipe.
   8. D3982 - Standard Specification for Contact Molded “Fiberglass” (Glass-Fiber-Reinforced Thermosetting-Resin) Ducts.
   9. E84 - Standard Test Method for Surface Burning Characteristics of Building Materials.

D. National Fire Protection Association (NFPA):
   1. 91 - Standard for Exhaust Systems for Air Conveying of Vapors, Gases, Mists, and Particulate Solids.

E. National Institute of Standards and Technology (NIST):
   1. PS 15 - Custom Contact-Molded Reinforced-Polyester Chemical Resistant Process Equipment.

F. Sheet Metal and Air Conditioning Contractors' National Association (SMACNA).

1.03 SUBMITTALS

A. As specified in Sections 01330 - Submittal Procedures.

B. Shop drawings:
   1. Scaled ductwork layout.
      a. Size, joint types, horizontal dimensions, and elevations.
      b. Support locations.
      c. External stiffeners and expansion joints locations.
   2. Fabrication details.
   3. Support, flexible connections, and external stiffeners.
      a. Materials and configuration.

C. Calculations:
   1. Wall thickness calculations based upon design criteria.
   2. Stresses and reaction loads at supports.

D. Manufacturer's installation instructions.
   1. Detailed instructions for field butt joints including lay-up sequence, width of each reinforcement layer, and total number of layers.

E. Submit test results as specified in Section 06608 - Fiberglass Reinforced Plastic verifying that ductwork meets standards specified.
   1. Also, in accordance with Section 06608 - Fiberglass Reinforced Plastic as to the requirements of FRP manufacturing and standard testing.
   2. If there is a conflict between this Section and Section 06608 - Fiberglass Reinforced Plastic, the more stringent requirements shall govern.
      a. Test methods by the manufacturer shall be in accordance with ASTM 2996 and ASTM 2992 (buried pipe).

1.04 WARRANTY

A. As specified.

PART 2 PRODUCTS

2.01 GENERAL

A. As specified in Section 01600 - Product Requirements.

2.02 MANUFACTURERS

A. Fiberglass reinforced plastic ductwork:
   1. One of the following or equal:
      a. Daniel Mechanical.
      b. Engineered Composite Systems.
      c. Perry Fiberglass Products, Inc.
      d. NOV Fiber Glass Systems.

2.03 DESIGN AND PERFORMANCE CRITERIA

A. Support spacing: As needed to comply with wall thicknesses calculations but not greater than the following:
   1. Contact-molded ductwork: Not greater than 5 foot centers.
   2. Filament-wound ducts: In accordance with SMACNA standards below:

Duct Inside Diameter (Inches)	Maximum Span (Feet)
3 to 19	10
20 to 29	15
30 to 35	20

B. Minimum flooding: Design ductwork for water accumulation as follows:
   1. Rectangular ductwork: 1-inch deep across bottom of duct.
   2. Round ductwork: 2 inches deep across bottom of duct.

C. Physical and mechanical properties: Duct shall meet the following standards for physical and mechanical properties:

Pipe Property	Standard	Design Properties	
		Hoop (PSI)	Axial (PSI)
Ultimate Flexural Stress Flexural Modulus	ASTM D2412	50,000 3.05 X 10^6	18,000 1.0 X 10^6
Ultimate Tensile Stress Tensile Modulus	ASTM D2105	52,000 1.5 X 10^6	7,485 1.56 X 10^6
Ultimate Shear Strength		Approximate Typical Values (PSI)	
Interlaminar Cross	ASTM D2344	2130-2730 15,000	
Density	ASTM D792	0.065-0.072 lb./In^3	

D. Design tensile stress:
   1. Calculations for design of wall thickness assume a laminate ultimate tensile stress of 9,000 pounds per square inch maximum.
   2. Decrease ultimate tensile stress as appropriate to the laminate design.
      a. Round ducting: The maximum allowable design tensile stress shall be the ultimate tensile stress divided by 5.
      b. Rectangular ducting: The maximum allowable design tensile stress shall be the ultimate tensile stress divided by 10.

E. Manufacturer shall provide design calculations for FRP ductwork design and construction. Calculations shall be signed and sealed by licensed engineer registered in the state of the project location

2.04 DUCTWORK MATERIALS

A. As specified in applicable portions of Section 06608 - Fiberglass Reinforced Plastic.

B. Minimum corrosion liner:
   1. Interior surfacing "C" or Nexus veil as specified for the service environment.
   2. Exterior surfacing: “C” or “A” veil.
   3. Remainder 1-1/2 ounce per square foot mat to total minimum thickness of 0.096 inch on surface exposed to the service environment.
   4. Duct shall be resistant to the following in accordance with ASTM C582:

Sulfuric Acid	75 percent	At 100 degrees Fahrenheit
Nitric Acid	20 percent	At 100 degrees Fahrenheit
Sodium Hydroxide	50 percent	At 100 degrees Fahrenheit
Hydrofluoric Acid	20 percent	At 100 degrees Fahrenheit

C. Ultraviolet stabilizer:
   1. All exposed external surfaces of all FRP ductwork installed outdoors shall be provided with protection against ultraviolet degradation and weather erosion.
   2. The duct shall carry the flame spread rating of 25 or less in accordance with ASTM E84 and a smoke contribution rating in excess of 1,000 in accordance with NPFA 91.
   3. External duct protection shall be provided by an ultraviolet stabilizer added to the final coat or resin that also incorporates paraffin wax curing elements and color pigment.
   4. An alternative system to polyurethane paint with color pigments may be used if approved by the Owners Designated Representative.

D. Resin:
   1. The external surface and structural layers of all FRP ductwork shall carry a flame spread rating of 25 or less in accordance with ASTM E84 and a smoke contribution of 50 or less in accordance with NFPA 91.
   2. Premium vinyl ester as follows unless otherwise recommended by the resin manufacturer for the service environment:
      a. Resin for structural layers: Resin with sufficient antimony trioxide or pentoxide for Class I fire rating.
      b. Manufacturers: One of the following or equal:
         1) Ashland, Hetron 992FR.
         2) Reichhold Dion, VER 9300FR.

E. Color: Add pigment to the exterior surface resin coat such that the color of the duct will be similar to paint used for existing ducts.

F. Provide fasteners, field joints, expansion joints, and supports required for complete installation of a duct system.

G. Flanges:
   1. All flanges shall be hand laid up to the thickness specified in accordance with ASTM D3982.
   2. FRP flanges shall be made of the same materials as the FRP ductwork.
   3. Flange bolt hold pattern as well as flange dimensions, shall be in accordance with NIST PS 15 Tables 2 and 5 for duct and pipe, respectively, except for thickness. Thickness of flange shall be a minimum of 1/2 inch.
   4. Flanges shall be manufactured using the hand lay-up technique and shall be integral to the duct in accordance with ASME RTP-1. Filament-wound and/or random chopped methods of constructing flanges will not be acceptable.

Pipe Diameter (Inches)	Minimum Flange Thickness (Inches)
Less Than 12	1/2
12-24	1/2
25-41	5/8
42-60	3/4

2.05 DOUBLE-WALL INSULATED FRP DUCT (NOT USED)

2.06 DUCTWORK FABRICATION

A. Hand lay-up or filament wound construction as specified in Section 06608 - Fiberglass Reinforced Plastic.
   1. Provide wall thickness necessary to comply with design criteria but not less than the following minimum thicknesses.
   2. Structural wall thicknesses shall not include the thickness of the interior corrosion barrier, inner surface, and interior layer:

Duct Size	Round Ducting (wall thickness, inches)	Rectangular Ducting (wall thickness, inches)	Buried Ducting (wall thickness, inches)
For 18 inch & smaller ducts	0.1875	0.25	0.34
20 to 36 inch ducts	0.25	0.375	0.42
42 to 54 inch ducts	0.375	0.500	0.60
60 to 72 inch ducts	0.438	0.625	0.625

B. Fittings:
   1. Type: Hand lay-up contact molded.
   2. Resin: Identical to and with same strength as resin used for FRP ductwork.
   3. Wall thickness: At least equal to the thickness of the thickest adjacent ducting.
   4. Internal diameter: Equal to the adjacent duct.
   5. Tolerance:
      a. Angles for all fittings shall be within 1 degree for up to 30-inch diameter duct.
      b. Angles for all fittings shall be within 1/2 degree for over 30-inch diameter and above duct.

6. Round standard elbows:
    a. Standard elbow centerline radius shall be equal to 1-1/2 times the diameter unless otherwise indicated on the Drawings.
    b. Standard elbows up to 24-inch diameter shall be smooth radius elbows. Standard elbows of 26-inch diameter and greater may be mitered sections as follows:
        1) 0 to 44 degree elbows shall contain 1 mitered joint and 2 sections.
        2) 45 to 80 degree elbows shall contain a minimum of 2 mitered joints and 3 sections.
        3) Elbows greater than 80 degrees shall contain a minimum of 4 mitered joints and 5 sections.
    c. Provide turning vanes in all round mitered elbows. Round elbow turning vanes shall be of FRP construction, solid or double wall construction with an airfoil shaped profile.
7. Rectangular elbows:
    a. Fittings shall be factory manufactured to meet the specified design criteria and in accordance with approved submittals. Factory install reinforcing ribs as required to meet the specified deflection requirements and to provide a system free from pulsing, warpage, sagging, and undue vibration.
    b. Provide turning vanes in all rectangular elbows. Rectangular elbow turning vanes shall be of FRP construction, solid or double wall construction with an airfoil shaped profile.

C. Joints:
1. Flanged:
    a. Flanged in accordance with ASTM D3982 and bolt hold patterns in accordance with NIST PS 15, Table 2.
    b. Flanged joints shall be provided at the following locations:
        1) At each damper and each item of equipment to facilitate disassembly.
        2) At each change in material.
    c. Gaskets for flanged joints: 1/8-inch neoprene over full flange face.
    d. Bolt nuts and washers: Type 316 stainless steel.
2. Butt and strap welded:
    a. Field butt and strap welded joints shall be provided at the following locations:
        1) 12 inches from any increasing or decreasing cross-section of pipe.
        2) Where the pipe to be joined has the same diameter.
    b. Thickness of butt and strap joint overlays: At least equal to the thickness of the thickest adjacent duct.
    c. Field weld kits:
        1) All necessary fiberglass and reinforcing material shall be supplied pre-cut and individually packaged for each joint.
        2) Bulk Glass rolls will not be acceptable.

2.07 FLEXIBLE CONNECTIONS

A. Flexible connection shall be provided as indicated on the Drawings. When flexible connections are not shown, they shall be provided at all duct to rotating equipment connections.

B. FL-3, Duct to Equipment Heavy Duty Flexible Connection:
   1. Materials: EPDM rubber vulcanized with minimum of 1 ply of reinforcing fabric; 3/16 inch thick.
   2. Unit shall have minimum movement of:
      a. Axial compression: 2.25 inches.
      b. Axial extension: 1.25 inches.
      c. Lateral offset: 1.25 inches.
   3. Provide 3/8-inch thick by 2-inch wide pre-drilled retaining rings/back-up bars to clamp the expansion joints into the ducting system.
   4. The expansion joint shall be of fully molded construction. Splices will not be allowed in the body of the expansion joint.
   5. Manufacturers: One of the following or equal:
      a. Proco Series 500, Style 530 Fabric Fan Connector.
      b. Holz Rubber Style 952 Arch Design Expansion Joint.

2.08 EXPANSION JOINTS

A. Expansion joints shall be provided as indicated on the Drawings. When expansion joints are not shown, they shall be provided in above grade duct at maximum spacing of 40 foot centers.

B. Construction:
   1. Body: EPDM.
   2. Reinforcing: Multiple layers (2 minimum) of impregnated polyester or Kevlar tire cord fabric.
   3. Flange rings: Type 316 stainless steel or minimum 3/4 inch thick FRP.
   4. Hardware/Fasteners: Type 316 stainless steel.
   5. Minimum pressure rating: 1 pounds per square inch.
   6. Minimum vacuum rating: 1 pounds per square inch.
   7. Minimum operating temperature: 175 degree Fahrenheit.
   8. Connections: Flanged in accordance with NIST PS 15, Table 2.
   9. Seamless construction built as on continuous piece. Wrapped, seamed, or spliced type expansion joints are not acceptable.
   10. Provide Type 316 stainless steel control rods.

C. Minimum movement:
   1. Axial compression: 2.25 inches.
   2. Axial extension: 1.25 inches.
   3. Lateral offset: 1 inch.

D. Manufacturers: One of the following or equal:
   1. Daniel Co., DanFLEX Model 101.
   2. Mercer Rubber Co., Model ME for Rectangular, Model MI-9 for Round.

2.09 DUCT SUPPORTS

A. Provide duct supports as indicated on the Drawings.

B. Protect the duct from clamping force of strap hangers with a 1/8-inch thick layer of neoprene pad.

C. When anchors are required, they shall be externally bonded to the duct. Drive screws or other penetrations of the duct linter are not permitted.

D. When duct supports are not indicated on the Drawings provide supports and seismic bracing in accordance with the SMACNA Design Manual.

2.10 SHOP INSPECTION (NOT USED)

2.11 SHIPPING, SPARE PARTS, MAINTENANCE PRODUCTS, AND SPECIAL TOOLS

A. As specified in Section 01600 - Product Requirements.

PART 3 EXECUTION

3.01 GENERAL

A. As specified in Section 01600 - Product Requirements.

3.02 INSTALLATION

A. All ductwork shall be fabricated and erected where indicated on the Drawings or as specified in this Section. Ductwork shall be rigidly supported and secured in an approved manner.

B. Install ductwork parallel to walls and/or roof and vertically plumb.

C. Bracing and vibration isolators shall be installed, where necessary, to eliminate vibration, rattle and noise.
   1. Hangers shall be installed plumb and securely suspended from supplementary steel or inserts in concrete slabs.
   2. Lower ends of hanger rods shall be sufficiently threaded to allow for adequate vertical adjustment.
   3. Building siding and metal decking shall not be used to hang ductwork.

D. Contractor shall not install any equipment or materials until the Owners Designated Representative has approved all submittals. If any equipment or materials are installed prior to approval of the submittals, it shall be at the Contractor's risk.

E. Wherever ducts are divided, the cross-sectional area shall be maintained. All such changes must be approved and installed as directed by the Owners Designated Representative or as approved on shop or erection drawings.

F. Do not remove or alter factory installed duct reinforcing ribs except as required to accommodate duct alterations due to unexpected field conditions.
   1. Notify the Owners Designated Representative prior to starting any field modifications involving ductwork structural reinforcing members.
   2. Submit additional design calculations to demonstrate structural design integrity of ductwork and fittings requiring reinforcing modifications in the field.

G. No ductwork or components shall be shipped prior to complete resin cure.

H. Cover ductwork openings with tape, plastic, or sheet metal to reduce the amount of dust or debris which may collect in the system at each of the following times:
   1. At the time of rough installation.
   2. During storage on the construction site.
   1. Until final start-up of the heating and cooling equipment.

I. Before installation remove dust and debris from ducts.

J. Install products in accordance with shop drawings and manufacturer's instructions. Drawings indicate general routing only and shall be modified as necessary.

END OF SECTION

SECTION 15956

PIPING SYSTEMS TESTING

PART 1 GENERAL

1.01 SUMMARY

A. Section includes: Test requirements for piping systems.

1.02 REFERENCES

A. National Fuel Gas Code (NFGC).

B. American Society of Mechanical Engineers (ASME):
   1. B31.1 - Power Piping.
   2. B31.3 - Process Piping.
   3. B31.8 - Gas Transmission and Distribution Piping Systems.

C. Underwriters Laboratories Inc. (UL).

1.03 TESTING REQUIREMENTS

A. General requirements:
   1. Testing requirements are stipulated in Laws and Regulations; are included in the Piping Schedule in Section 15052 - Common Work Results for General Piping; are specified in the specifications covering the various types of piping; and are specified in this Section.
   2. Requirements in Laws and Regulations supersede other requirements of Contract Documents, except where requirements of Contract Documents are more stringent, including higher test pressures, longer test times, and lower leakage allowances.
   3. Test plumbing piping in accordance with Laws and Regulations, the plumbing code, as specified in Section 01410 - Regulatory Requirements, and UL requirements.
   4. Test natural gas or digester gas piping:
      a. For less than 125 pounds per square inch gauge working pressure, test in accordance with mechanical code, as specified in Section 01410 - Regulatory Requirements, or the National Fuel Gas Code, whichever is more stringent.
      b. For 125 pounds per square inch gauge or greater working pressure, test per ASME B31.3 or ASME B31.8, whichever is more stringent.
   5. When testing with water, the specified test pressure is considered to be the pressure at the lowest point of the piping section under test.
      a. Lower test pressure as necessary (based on elevation) if testing is performed at higher point of the pipe section.

B. Furnish necessary personnel, materials, and equipment, including bulkheads, restraints, anchors, temporary connections, pumps, water, pressure gauges, and other means and facilities required to perform tests.

C. Water for testing, cleaning, and disinfecting:
   1. Water for testing, cleaning, and disinfecting will be provided as specified in Section 01500 - Temporary Facilities and Controls.

D. Pipes to be tested: Test only those portions of pipes that have been installed as part of this Contract. Test new pipe sections prior to making final connections to existing piping. Furnish and install test plugs, bulkheads, and restraints required to isolate new pipe sections. Do not use existing valves as test plug or bulkhead.

E. Unsuccessful tests:
   1. Where tests are not successful, correct defects or remove defective piping and appurtenances and install piping and appurtenances that comply with the specified requirements.
   2. Repeat testing until tests are successful.

F. Test completion: Drain and leave piping clean after successful testing.

G. Test water disposal: Dispose of testing water in accordance with requirements of federal, state, county, and city regulations governing disposal of wastes in the location of the Project and disposal site. All requirements and costs associated with notifications and obtaining any discharge permit or approvals shall be responsibility of Contractor.

1.04 SUBMITTALS

A. Submit as specified in Section 01330 - Submittal Procedures.

B. Schedule and notification of tests:
   1. Submit a list of scheduled piping tests by noon of the working day preceding the date of the scheduled tests.
   2. Notification of readiness to test: Immediately before testing, notify Engineer in writing of readiness, not just intention, to test piping.
   3. Have personnel, materials, and equipment specified in place before submitting notification of readiness.

1.05 SEQUENCE

A. Clean piping before pressure or leak tests.

B. Test gravity piping underground, including sanitary sewers, for visible leaks before backfilling and compacting.

C. Underground pressure piping may be tested before or after backfilling when not indicated or specified otherwise.

D. Backfill and compact trench, or provide blocking that prevents pipe movement before testing underground piping with a maximum leakage allowance.

E. Test underground piping before encasing piping in concrete or covering piping with slab, structure, or permanent improvement.

PART 2 PRODUCTS (NOT USED)

PART 3 EXECUTION

3.01 TESTING ALIGNMENT, GRADE, AND DEFLECTION

A. Alignment and grade:
   1. Visually inspect the interior of gravity piping with artificial light, reflected light, or laser beam.
   2. Consider inspection complete when no broken or collapsed piping, no open or poorly made joints, no grade changes that affect the piping capacity, or no other defects are observed.

B. Deflection test:
   1. Pull a mandrel through the clean piping section under test.
   2. Perform the test not sooner than 30 days after installation and not later than 60 days after installation.
   3. Use a 9-rod mandrel with a contact length of not less than the nominal diameter of the pipe within 1 percent plus or minus.
   4. Consider test complete when the mandrel can be pulled through the piping with reasonable effort by 1 person, without the aid of mechanical equipment.

3.02 AIR TESTING METHOD FOR PRESSURE PIPING

A. Air test piping, indicated with "AM" in the Piping Schedule, with air or another nonflammable or inert gas.

B. Test gas, air, liquefied petroleum gas, liquid chlorine, and chlorine gas piping by the air test method:
   1. Test chlorine piping with dry air or nitrogen having a dew point of minus 40 degrees Fahrenheit or less. Supply temporary air dryers as necessary.

C. Test at pressure as specified in Piping Schedule in Section 15052 - Common Work Results for General Piping:
   1. Provide temporary pressure relief valve for piping under test:
      a. Set at the lesser of 110 percent of the test pressure or 50 pounds per square inch gauge over the test pressure.
   2. Air method test pressures shall not exceed 110 percent of the piping maximum allowable working pressure calculated in accordance with the most stringent of ASME B31.1, ASME B31.3, ASME B31.8, or the pipe manufacturer's stated maximum working pressure.
   3. Gradually increase test pressure to an initial test pressure equal to the lesser of 1/2 the test pressure or 25 pounds per square inch gauge.
   4. Perform initial check of joints and fittings for leakage.
   5. Gradually increase test pressure in steps no larger than the initial pressure. Check for leakage; at each step increase until test pressure reached.
   6. At each step in the pressure, examine and test piping being air tested for leaks with soap solution.
   7. Consider examination complete when piping section under test holds the test pressure for 15 minutes without losses.

3.03 TESTING GRAVITY FLOW PIPING

A. Test gravity flow piping indicated with "GR" in the Piping Schedule, as follows:
   1. Unless specified otherwise, subject gravity flow piping to the following tests:
      a. Alignment and grade.
      b. For plastic piping test for deflection.
      c. Visible leaks and pressure with maximum leakage allowance, except for storm drains and culverts.
   2. Inspect piping for visible leaks before backfilling.
   3. Provide temporary restraints when needed to prevent movement of piping.
   4. Pressure test piping with maximum leakage allowance after backfilling.
   5. With the lower end plugged, fill piping slowly with water while allowing air to escape from high points. Keep piping full under a slight head for the water at least 24 hours:
      a. Examine piping for visible leaks. Consider examination complete when no visible leaks are observed.
      b. Maintain piping with water, or allow a new water absorption period of 24 hours for the performance of the pressure test with maximum leakage allowance.
      c. After successful completion of the test for visible leaks and after the piping has been restrained and backfilled, subject piping to the test pressure for minimum of 4 hours while accurately measuring the volume of water added to maintain the test pressure:
         1) Consider the test complete when leakage is equal to or less than the following maximum leakage allowances:
            a) For concrete piping with rubber gasket joints: 80 gallons per day per inch of diameter per mile of piping under test:
               (1) Advise manufacturer of concrete piping with rubber gasket joints of more stringent than normal maximum leakage allowance.
            b) For vitrified clay piping: 500 gallons per day per inch of diameter per mile of piping under test.
            c) For other piping: 80 gallons per day per inch diameter per mile of piping under test.

3.04 TESTING HIGH-HEAD PRESSURE PIPING

A. Test piping for which the specified test pressure in the Piping Schedule is 20 pounds per square inch gauge or greater, by the high head pressure test method, indicated "HH" in the Piping Schedule.

B. General:
   1. Test connections, hydrants, valves, blowoffs, and closure pieces with the piping.
   2. Do not use installed valves for shutoff when the specified test pressure exceeds the valve's maximum allowable seat differential pressure. Provide blinds or other means to isolate test sections.
   3. Do not include valves, equipment, or piping specialties in test sections if test pressure exceeds the valve, equipment, or piping specialty safe test pressure allowed by the item's manufacturer.
   4. During the performance of the tests, test pressure shall not vary more than plus or minus 5 pounds per square inch gauge with respect to the specified test pressure.

5. Select the limits of testing to sections of piping. Select sections that have the same piping material and test pressure.
6. When test results indicate failure of selected sections, limit tests to piping:
   a. Between valves.
   b. Between a valve and the end of the piping.
   c. Less than 500 feet long.
7. Test piping for minimum 2 hours for visible leaks test and minimum 2 hours for the pressure test with maximum leakage allowance.

C. Testing procedures:
1. Fill piping section under test slowly with water while venting air:
   a. Use potable water for all potable waterlines and where noted on the Piping Schedule.
2. Before pressurizing for the tests, retain water in piping under slight pressure for a water absorption period of minimum 24 hours.
3. Raise pressure to the specified test pressure and inspect piping visually for leaks:
   a. Consider visible leakage testing complete when no visible leaks are observed.

D. Pressure test with maximum leakage allowance:
1. Leakage allowance is zero for piping systems using flanged, National Pipe Thread threaded and welded joints.
2. Pressure test piping after completion of visible leaks test.
3. For piping systems using joint designs other than flanged, threaded, or welded joints, accurately measure the makeup water necessary to maintain the pressure in the piping section under test during the pressure test period:
   a. Consider the pressure test to be complete when makeup water added is less than the allowable leakage and no damage to piping and appurtenances has occurred.
   b. Successful completion of the pressure test with maximum leakage allowance shall be achieved when the observed leakage during the test period is equal or less than the allowable leakage and no damage to piping and appurtenances has occurred.
   c. When leakage is allowed, calculate the allowable leakage by the following formula:

      $L = S \times D \times P^{1/2} \times 148{,}000^{-1}$

      wherein the terms shall mean:

      L = Allowable leakage in gallons per hour.

      S = Length of the test section in feet.

      D = Nominal diameter of the piping in inches.

      P = Average observed test pressure in pounds per square inches gauge, at the lowest point of the test section, corrected for elevation of the pressure gauge.

      x = The multiplication symbol.

3.05 TESTING LOW-HEAD PRESSURE PIPING

A. Test piping for which the specified test pressure is less than 20 pounds per square inch gauge, by the low head pressure test method, indicated "LH" in the Piping Schedule.

B. General:
   1. Test pressures shall be as scheduled in Section 15052 - Common Work Results for General Piping.
   2. During the performance of the tests, test pressure shall not vary more than plus or minus 2 pounds per square inch gauge with respect to the specified test pressure.
   3. Test connections, blowoffs, vents, closure pieces, and joints into structures, including existing bell rings and other appurtenances, with the piping.
   4. Test piping for minimum 2 hours for visible leaks test and minimum 2 hours for the pressure test with maximum leakage allowance.

C. Visible leaks test:
   1. Subject piping under test to specified pressure measured at the lowest end.
   2. Fill piping section under test slowly with water while venting air:
      a. Use potable water for all potable waterlines and where noted on the Piping Schedule.
   3. Before pressurizing for the tests, retain water in piping under slight pressure for the water absorption period of minimum 24 hours.
   4. Raise pressure to the specified test pressure and inspect piping visually for leaks. Consider testing complete when no visible leaks are observed.

D. Pressure test with maximum leakage allowance:
   1. Pressure test piping after completion of visible leaks test.
   2. Accurately measure the makeup water necessary to maintain the pressure in the piping section under test during the pressure test period:
      a. Consider the pressure test to be complete when makeup water added is less than the allowable leakage of 80 gallons per inch of nominal diameter, per mile of piping section under test after 24 hours, and no damage to piping and appurtenances has occurred.
      b. Successful completion of the leakage test shall have been achieved when the observed leakage is equal or less than the allowable leakage and no damage to piping and appurtenances has occurred.

E. Optional joint test:
   1. When joint testing is allowed by note in the Piping Schedule, the procedure shall be as follows:
      a. Joint testing will be allowed only for low head pressure piping.
      b. Joint testing does not replace and is not in lieu of any testing of the piping system or trust restraints.
   2. Joint testing may be performed with water or air.
   3. Joint test piping after completion of backfill and compaction to the top of the trench.

4. Joint testing with water:
    a. Measure test pressure at the invert of the pipe. Apply pressure of 4 feet plus the inside diameter of the pipe in water column within 0.20 foot in water column.
    b. Maintain test pressure for 1 minute.
    c. Base the allowable leakage per joint on 80 gallons per inch nominal diameter, per mile of piping, per 24 hours equally distributed to the actual number of joints per mile for the type of piping.
    d. Consider the pressure test to be complete when makeup water added is less than the allowable leakage.
    e. Successful completion of the joint test with water shall have been achieved when the observed leakage is equal or less than the allowable leakage.
5. Joint testing with air:
    a. Apply test pressure of 3 pounds per square inch gauge with a maximum variation of plus 0.20 and minus 0.00 pounds per square inch.
    b. Maintain test pressure for 2 minutes.
    c. Consider the pressure test to be complete when the test pressure does not drop below 2.7 pounds per square inch for the duration of the test.

END OF SECTION

SECTION 16010

BASIC ELECTRICAL REQUIREMENTS

PART 1 GENERAL

1.01 RELATED SECTIONS

A. Requirements specified within this section apply to all sections in Division 16, Electrical. Work specified herein shall be performed as if specified in the individual sections.

1.02 ELECTRICAL SUBCONTRACTOR QUALIFICATIONS

A. The electrical subcontractor shall meet or exceed the criteria described below:
   1. The electrical subcontractor shall be licensed in the State of Florida.
   2. The electrical subcontractor shall have successfully completed electrical construction on three water treatment plants related projects within the past six years.
   3. It is preferred that the electrical subcontractor have prior electrical construction experience with the City of Pembroke Pines Utilities within the previous six years.
   4. The electrical subcontractor shall have, in their employ, the following full time employees that will be assigned to perform the electrical work of this contract:
      a. A minimum of (1) Licensed Master Electrician who is overall responsible for the supervision of personnel performing the construction, installation startup and testing of all electrical related facilities and systems.
      b. A minimum of (1) Licensed Journeyman Electrician responsible for the daily construction activities and guidance of the electrical Contractor's on site employees. The Licensed Journeyman's primary assignment will be the construction of the electrical facilities of this project until project completion. The Licensed Journeyman shall be certified in Broward County or shall meet the reciprocity standards of Florida State Statue 489 Part II.
   5. The electrical subcontractor shall not be involved in any current or pending litigation which may have a material negative impact on the ability to complete the project. The electrical subcontractor shall provide a statement advising all current or pending litigations.

1.03 DESIGN REQUIREMENTS

A. All electronic boards as part of electrical equipment shall meet the atmospheric conditions of the space the equipment is installed in. All electronic boards which are not installed in a conditioned environment shall be fungus-resistant.

B. All electrical equipment shall be rated for the conditions the equipment is installed in.

1.04 STANDARDS, CODES, PERMITS, AND REGULATIONS

A. Perform all work; furnish and install all materials and equipment in full accordance with the latest applicable rules, regulations, requirements, and specifications of the following:
   1. Local Laws and Ordinances.
   2. State and Federal Laws.
   3. National Electrical Code (NEC).
   4. State Fire Marshal.
   5. Underwriters' Laboratories (UL).
   6. National Electrical Safety Code (NESC).
   7. American National Standards Institute (ANSI).
   8. National Electrical Manufacturer's Association (NEMA).
   9. National Electrical Contractor's Association (NECA) Standard of Installation.
   10. Institute of Electrical and Electronics Engineers (IEEE).
   11. Insulated Cable Engineers Association (ICEA).
   12. Occupational Safety and Health Act (OSHA).
   13. National Electrical Testing Association (NETA).
   14. ASTM International (ASTM).
   15. Florida Building Code, including Broward County amendments.

B. Conflicts, if any, which may exist between the above items, will be resolved at the discretion of the Engineer.

C. Wherever the requirements of the Specifications or Drawings exceed those of the above items, the requirements of the Specifications or Drawings govern. Code compliance is mandatory. Construe nothing in the Contract Documents as permitting work not in compliance with these codes.

D. Obtain all permits and pay all fees required by any governmental agency having jurisdiction over the work. Arrange all inspections required by these agencies. On completion of the work, furnish satisfactory evidence to the Engineer that the work is acceptable to the regulatory authorities having jurisdiction.

1.05 ELECTRICAL COORDINATION

A. Work Provided Under this Contract:
   1. Provide and install the complete electrical power distribution system shown on the drawings including equipment space.
   2. Provide and install all electrical equipment indicated on the drawings and described in the specifications including manual modifications of panel boards, modifications of motor control centers, disconnects, local starters, wire, raceway etc. complete in place.
   3. Provide and install all new underground conduit duct banks and wiring indicated on drawings complete in place.
   4. Provide all miscellaneous electrical including switches, terminations, fittings, wiring, conduit, junction boxes, etc. not specified but obviously necessary for a complete working system in place.
   5. Contractor shall replace existing wells WP-1 and WP-3, flow meters and pertaining electrical equipment and instrumentation as shown on the design drawings.

1.06 SUBMITTALS

A. Quality Control Submittals:
   1. Voltage Field Test Results.
   2. Voltage Balance Report.
   3. Equipment Line Current Report.
   4. Factory test certification and reports for all major electrical equipment.
   5. Site test certification and reports as specified in other Division 16, Electrical sections.
   6. As part of the electrical submittal, the Contractor shall provide a minimum of 1/2”=1’-0” scaled layout of the electrical equipment in the electrical room or major electrical equipment in a mechanical room showing sizes of all equipment and their spatial relationship. Non-electrical equipment shall be approved before finalizing the electrical layout in mechanical rooms.

B. The following information shall be provided for electrical equipment furnished under specifications 16050 Basic Electrical Materials and Methods;:
   1. A copy of each specification section, with addendum updates included, and all referenced and applicable sections, with addendum updates included, with each paragraph check-marked to indicate specification compliance or marked to indicate requested deviations from specification requirements. Check-marks (√) shall denote full compliance with a paragraph as a whole. If deviations from the specifications are indicated, and therefore requested by the Contractor, each deviation shall be underlined and denoted by a number in the margin to the right of the identified paragraph. The remaining portions of the paragraph not underlined shall signify compliance on the part of the Contractor with the specifications. The submittal shall be accompanied by a detailed, written justification for each deviation.

C. Electrical equipment submittals shall be made by specification section. Submit one package per specification section and do not group multiple specification sections under one submittal package.

D. Provide complete conduit and equipment layouts: a scaled plan layout of the electrical room(s) showing spatial relationships of all equipment as well as the overall size of the room. Minimum scale shall be 1/2”=1’-0”.

E. Provide a conduit plan for major power, instrumentation and control conduits, both interior and exterior, showing routing, size and stub up locations for buried or in slab conduits.

1.07 ENVIRONMENTAL CONDITIONS

A. All chemical rooms and areas shall be designated as corrosive.

B. All indoor chemical and process equipment areas shall be considered wet locations.

C. Electrical equipment in rooms designated as Classified by NFPA 70 (national electrical code) as Division 1 or Division 2 shall meet all requirements set forth for that classification as described in NEC article 500.

1.08 INSPECTION OF THE SITE AND EXISTING CONDITIONS

A. The Electrical Drawings were developed from past record drawings and information supplied by the Owner. Verify all scaled dimensions prior to submitting bids.

B. Before submitting a bid, visit the site and determine conditions at the site and at all existing structures in order to become familiar with all existing conditions and electrical system which will, in any way or manner, affect the work required under this Contract. No subsequent increase in Contract cost will be allowed for additional work required because of the Contractor's failure to fulfill this requirement.

C. Carry out any work involving the shutdown of the existing services to any piece of equipment now functioning in existing areas at such time as to provide the least amount of inconvenience to the Owner. Do such work when directed by the Engineer.

D. After award of Contract, locate all existing underground utilities at each area of construction activity. Protect all existing underground utilities during construction. Pay for all required repairs without increase in Contract cost, should damage to underground utilities occur during construction.

1.09 RESPONSIBILITY

A. The Contractor shall be responsible for:
   1. Complete systems in accordance with the intent of these Contract Documents.
   2. Coordinating the details of facility equipment and construction for all Specification Divisions which affect the work covered under Division 16, Electrical.
   3. Furnishing and installing all incidental items not actually shown or specified, but which are required by good practice to provide complete functional systems.

1.10 INTENT OF DRAWINGS

A. Electrical plan Drawings show only general location of equipment, devices, and raceway, unless specifically dimensioned. The Contractor shall be responsible for the proper routing of raceway, subject to the approval of the Engineer.

B. All electrical equipment sizes and characteristics have been based on manufacturer Eaton Electrical. If the Contractor chooses to and is allowed to substitute, the Contractor shall be responsible for fitting all the equipment in the available space as shown on the Drawings.

PART 2 PRODUCTS

2.01 GENERAL

A. Provide materials and equipment listed by UL wherever standards have been established by that agency. If a UL listing is not available, equipment shall have a label and listing from a nationally recognized testing laboratory (NRTL) acceptable to the authority having jurisdiction (AHJ) over the project location.

B. Equipment Finish:
   1. Provide manufacturers' standard finish and color, except where specific color is indicated.
   2. If manufacturer has no standard color, provide equipment with ANSI No. 61, light gray color.

PART 3 EXECUTION

3.01 GENERAL

A. Electrical Drawings show general locations of equipment, devices, and raceway, unless specifically dimensioned.

B. Install work in accordance with NECA Standard of Installation, unless otherwise specified.

3.02 LOAD BALANCE

A. Drawings and Specifications indicate circuiting to electrical loads and distribution equipment.

B. Balance electrical load between phases as nearly as possible on switchboards, panel boards, motor control centers, and other equipment where balancing is required.

C. When loads must be reconnected to different circuits to balance phase loads, maintain accurate record of changes made, and provide circuit directory that lists final circuit arrangement.

3.03 CHECKOUT AND STARTUP

A. Voltage Field Test:
   1. Check voltage at point of termination of power company supply system to project when installation is essentially complete and is in operation.
   2. Check voltage amplitude and balance between phases for loaded and unloaded conditions.
   3. Record supply voltage (all three phases simultaneously on the same graph) for 24 hours during normal working day.
      a. Submit Voltage Field Test Report within 5 days of test.

4. Unbalance Corrections:
    a. Make written request to power company to correct condition if balance (as defined by NEMA) exceeds 1 percent, or if voltage varies throughout the day and from loaded to unloaded condition more than plus or minus 4 percent of nominal.
    b. Obtain a written certification from a responsible power company official that the voltage variations and unbalance are within the normal standards if corrections are not made.

B. Equipment Line Current Tests:
    1. Check line current in each phase for each piece of equipment.
    2. Make line current check after power company has made final adjustments to supply voltage magnitude or balance.
    3. If any phase current for any piece of equipment is above rated nameplate current, prepare Equipment Line Phase Current Report that identifies cause of problem and corrective action taken.

C. Startup:
    1. Demonstrate satisfactory operation of all 480-volt electrical equipment. Participate with other trades in all startup activities.
    2. Assist the Instrumentation and Control (I&C) Contractor in verifying signal integrity of all control and instrumentation signals.

END OF SECTION

SECTION 16050

BASIC ELECTRICAL MATERIALS AND METHODS

PART 1 GENERAL

1.01 REFERENCES

A. The following is a list of standards that may be referenced in this section:
   1. American National Standards Institute (ANSI):
      a. C62.11 - Standard for Metal-Oxide Surge Arrestors for AC Circuits.
      b. Z55.1 - Gray Finishes for Industrial Apparatus and Equipment.
   2. ASTM International (ASTM):
      a. A167 - Standard Specification for Stainless and Heat-Resisting Chromium-Nickel Steel Plate, Sheet, and Strip.
      b. A240 - Standard Specification for Heat-Resisting Chromium and Chromium-Nickel Stainless Steel Plate, Sheet, and Strip for Pressure Vessels.
      c. A570 - Standard Specification for Steel, Sheet, and Strip, Carbon, Hot-Rolled, Structural Quality.
   3. Federal Specifications (FS):
      a. W-C-596 - Connector, Receptacle, Electrical.
      b. W-S-896E - Switches, Toggle, Flush Mounted.
   4. National Electrical Contractors Association, Inc. (NECA): 5055, Standard of Installation.
   5. National Electrical Manufacturers Association (NEMA):
      a. 250, - Enclosures for Electrical Equipment (1000 Volts Maximum).
      b. AB 1 - Molded Case Circuit Breakers and Molded Case Switches.
      c. ICS 2 - Industrial Control Devices, Controllers, and Assemblies.
      d. KS 1 - Enclosed Switches.
      e. LA I - Surge Arrestors.
      f. PB 1 - Panelboards.
      g. ST 20 - Dry-Type Transformers for General Applications.
      h. WD I - General Requirements for Wiring Devices.
   6. National Fire Protection Association (NFPA): 70, National Electrical Code (NEC).
   7. Underwriters Laboratories, Inc. (UL):
      a. 67 - Standard for Panelboards.
      b. 98 - Standard for Enclosed and Dead-Front Switches.
      c. 198C - Standard for Safety High-interrupting-Capacity Fuses, Current.
   8. Limiting Types.
      a. 198E - Standard for Class Q Fuses.
      b. 486E - Standard for Equipment Wiring Terminals.
      c. 489 - Standard for Molded Case Circuit Breakers and Circuit Breaker Enclosures.
      d. 508 - Standard for Industrial Control Equipment.
      e. 810 - Standard for Capacitors.
      f. 943 - Standard for Ground-Fault Circuit Interrupters.
      g. 1059 - Standard for Terminal Blocks.
      h. 1561 - Standard for Dry-Type General-Purpose and Power Transformers.

1.02 SUBMITTALS

A. Shop Drawings:
   1. Device boxes for use in hazardous areas.
   2. Junction and pull boxes used at, or below, grade.
   3. Hardware.
   4. Terminal junction boxes.
   5. Panelboards and circuit breaker data.
   6. Fuses.
   7. Contactors.
   8. Transformers.
   9. All other miscellaneous material part of this project.
   10. Wire pulling compound.

1.03 QUALITY ASSURANCE

A. UL Compliance: Materials manufactured within scope of Underwriters Laboratories shall conform to UL Standards and have an applied UL listing mark.

B. Hazardous Areas: Materials and devices shall be specifically approved for hazardous areas of the class, division, and group shown and of a construction that will ensure safe performance when properly used and maintained.

1.04 SPARE PARTS

A. Furnish, tag, and box for shipment and storage the following spare parts:
   1. Fuses, 0 to 600 Volts: Six of each type and each current rating installed.

PART 2 PRODUCTS

2.01 OUTLET AND DEVICE BOXES

A. Sheet Steel: One-piece drawn type, zinc- or cadmium-plated.

B. Cast Metal:
   1. Box: Cast ferrous metal.
   2. Cover: Gasketed, weatherproof, cast ferrous metal, with stainless steel screws.
   3. Hubs: Threaded.
   4. Lugs (Cast Mounting) Manufacturer:
      a. Crouse-Hinds; Type FS or FD.
      b. Appleton; Type FS or FD.

C. Cast Aluminum:
   1. Material:
      a. Box: Cast, copper-free aluminum.
      b. Cover: Gasketed, weatherproof, cast copper-free aluminum with stainless steel screws.
   2. Hubs: Threaded.
   3. Lugs: Cast mounting.

4. Manufacturers:
    a. Crouse-Hinds; Type FS-SA or FD-SA.
    b. Appleton; Type FS or FD.

D. PVC-Coated Sheet Steel:
1. Type: One-piece.
2. Material: Zinc- or cadmium-plated.
3. Coating: All surfaces; 40-mil PVC.
4. Manufacturer: Appleton.

E. Nonmetallic:
1. Box: PVC.
2. Cover: PVC, weatherproof, with stainless steel screws.
3. Manufacturer: Carlon; Type FS or FD, with Type E98 or E96 covers.

2.02 JUNCTION AND PULL BOXES

A. Outlet Boxes Used as Junction or Pull Box: As specified under Article OUTLET AND DEVICE BOXES.

B. Large Sheet Steel Box: NEMA 250, Type 1.
1. Box: Code-gauge, galvanized steel.
2. Cover: Full access, screw type.
3. Machine Screws: Corrosion-resistant.

C. Large Stainless Steel Box: NEMA 250, Type 4X.
1. Box: 14-gauge, ASTM A240, Type 316-stainless steel.
2. Cover: Hinged with screws.
3. Hardware and Machine Screws: ASTM A167, Type 316-stainless steel.
4. Manufacturers:
    a. Hoffman Engineering Co.
    b. Robroy Industries.

D. Large Nonmetallic Box:
1. NEMA 250, Type 4X.
2. Box: High-impact, fiberglass-reinforced polyester or engineered thermoplastic, with stability to high heat.
3. Cover: Hinged with screws.
4. Hardware and Machine Screws: ASTM A167, Type 316 stainless steel.
5. Conduit hubs and mounting lugs.
6. Manufacturers:
    a. Crouse-Hinds; Type NJB.
    b. Carlon; Series N, C, or H.
    c. Robroy Industries.

E. Concrete Box:
1. Box: Reinforced, cast concrete.
2. Cover: Cast iron.
3. Cover Marking: ELECTRICAL, SIGNAL, or as shown.
4. Manufacturers:
    a. Brooks Products Inc.; No. 36/36T.
    b. Qwikset; W 17.

2.03 WIRING DEVICES

A. Switches:
   1. NEMA WD I and FS W-S-896E.
   2. Specification grade, totally-enclosed, ac type, with quiet tumbler switches and screw terminals.
   3. Capable of controlling 100 percent tungsten filament and fluorescent lamp loads.
   4. Rating: 20 amps, 120/277 volts.
   5. Color:
      a. Office Areas: Ivory.
      b. Other Areas: Brown.
   6. Switches with Pilot Light: 125-volt, neon light with red jewel, or lighted toggle when switch is ON.
   7. Manufacturers:
      a. Bryant.
      b. Leviton.
      c. Hubbell.
      d. Pass and Seymour.
      e. Arrow Hart.

B. Receptacle, Single and Duplex:
   1. NEMA WD 1 and FS W-C-596.
   2. Specification grade, two-pole, three-wire grounding type with screw type wire terminals suitable for No. 10 AWG.
   3. High strength, thermoplastic base color.
   4. Color:
      a. Office Areas: Ivory.
      b. Other Areas: Brown.
   5. Contact Arrangement: Contact to be made on two sides of each inserted blade without detent.
   6. Rating: 125 volts, NEMA WD 1, Configuration 5-20R, 20 amps.
   7. Manufacturers:
      a. Bryant.
      b. Leviton.
      c. Hubbell.
      d. Pass and Seymour.
      e. Sierra.
      f. Arrow Hart.

C. Receptacle, Ground Fault Circuit Interrupter: Duplex, specification grade, tripping at 5 mA.
   1. Color: Ivory.
   2. Rating: 125 volts, NEMA WD 1, Configuration 5-20R, 20 amps, capable of interrupting 5,000 amps without damage.
   3. Size: For 2-inch by 4-inch outlet boxes.
   4. Standard Model: NEMA WD 1 with No. 12 AWG copper USE/RHH/RHW-XLPE insulated pigtails and provisions for testing.
   5. Feed-Through Model: NEMA WD 1, with No. 12 AWG copper USE/RHH/RHW-XLPE insulated pigtails and provisions for testing.
   6. Manufacturers:
      a. Pass and Seymour.
      b. Bryant.

c. Leviton.
d. Hubbell.
e. Arrow Hart.

D. Receptacle, Special-Purpose:
1. Rating and number of poles as indicated or required for anticipated purpose.
2. Matching plug with cord-grip features for each special-purpose receptacle.

E. Multioutlet Surface Raceway System: Three-wire grounding receptacles, spaced on 6-inch centers with insulated grounding conductor to each receptacle.
1. Color: Gray with black receptacles.
2. Manufacturers:
a. Plugmold; 2000.
b. Walker; Duct 2GW.

2.04 DEVICE PLATES

A. General: Sectional type plates not permitted.

B. Plastic:
1. Material: Specification grade, 0.10-inch minimum thickness, noncombustible, thermosetting.
2. Color: To match associated wiring device.
3. Mounting Screw: Oval-head metal, color matched to plate.

C. Metal:
1. Material: Specification grade, one-piece, 0.040-inch nominal thickness stainless steel.
2. Finish: ASTM A167, Type 302/304, satin.
3. Mounting Screw: Oval-head, finish matched to plate.

D. Cast Metal:
1. Material: Malleable ferrous metal, with gaskets.
2. Screw: Oval-head stainless steel.

E. Engraved:
1. Character Height: 3/16 inch.
2. Filler: Black.

F. Weatherproof:
1. For Receptacles: Gasketed, cast metal or stainless steel, with individual cap over each receptacle opening.
2. Mounting Screw: Stainless steel.
a. Cap Spring: Stainless steel.
b. Manufacturers:
1) General Electric.
2) Bryant.
3) Hubbell.
4) Sierra.
5) Pass and Seymour.
6) Crouse-Hinds; Type WLRD or WLRS.
7) Bell.
8) Arrow Hart.

3. For Switches: Gasketed, cast metal incorporating external operator for internal switch.
    a. Mounting Screw: Stainless steel.
    b. Manufacturers:
        1) Crouse-Hinds; DS-181 or DS-185.
        2) Appleton; FSK-LVTS or FSK-IVS.

G. Raised Sheet Metal: 1/2-inch high zinc- or cadmium-plated steel designed for one-piece drawn type sheet steel boxes.

2.05 LIGHTING AND POWER DISTRIBUTION PANELBOARD (LP, IP, DP, AND PP PANEL)

A. NEMA PB I, NFPA 70, and UL 67, including panelboards installed in motor control equipment.

B. Panelboards and Circuit Breakers: Suitable for use with 75 degrees C wire at full NFPA 70, 75 degrees C ampacity.

C. Short-Circuit Current Equipment Rating: Fully rated; series connected unacceptable.

D. Rating: If not otherwise shown in plans. Applicable to a system with available short-circuit current of 25,000 amperes rms symmetrical at 208Y/120 or 120/240 volts and 65,000 amperes rms symmetrical at 480Y/277 volts.

E. Where ground fault interrupter circuit breakers are indicated or required by code: 5 mA trip, 10,000 amps interrupting capacity circuit breakers.

F. Cabinet: As shown on plans.

G. Bus Bar:
1. Material: Copper, full sized throughout length.
2. Provide for mounting of future circuit breakers along full length of bus regardless of number of units and spaces shown. Machine, drill, and tap as required for current and future positions.
3. Neutral: Insulated, rated 150 percent of phase bus bars with at least one terminal screw for each branch circuit.
4. Ground: Copper, installed on panelboard frame, bonded to box with at least one terminal screw for each circuit.
5. Lugs and Connection Points:
    a. Suitable for either copper or aluminum conductors.
    b. Solderless main lugs for main, neutral, and ground bus bars.
    c. Subfeed or through-feed lugs as shown.
6. Bolt together and rigidly support bus bars and connection straps on molded insulators.

H. Circuit Breakers:
1. NEMA AB 1 and UL 489.
2. Thermal-magnetic, quick-make, quick-break, molded case, of the indicating type showing ON/OFF and TRIPPED positions of operating handle.
3. Noninterchangeable, in accordance with NFPA 70.
4. Locking: Provisions for handle padlocking, unless otherwise shown.

5. Type: Bolt-on circuit breakers in all panelboards.
6. Multipole circuit breakers designed to automatically open all poles when an overload occurs on one pole.
7. Do not substitute single-pole circuit breakers with handle ties for multipole breakers.
8. Do not use tandem or dual circuit breakers in normal single-pole spaces.
9. Ground Fault Interrupter:
    a. Equip with conventional thermal-magnetic trip and ground fault sensor rated to trip in 0.025 second for a 5-milliampere ground fault (UL 943, Class A sensitivity).
    b. Sensor with same rating as circuit breaker and a push-to-test button.

I. Manufacturers:
1. Eaton Electrical.
2. Square D.
3. Or approved equal.

2.06 CIRCUIT BREAKER, INDIVIDUAL, 0 TO 600 VOLTS

A. NEMA AB I, UL 489 listed for use at location of installation.

B. Minimum Interrupt Rating: As shown or as required.

C. Thermal-magnetic, quick-make, quick-break, indicating type, showing ON/OFF and TRIPPED indicating positions of the operating handle.

D. Suitable for use with 75 degrees C wire at full NFPA 70, 75 degrees C ampacity.

E. Locking: Provisions for padlocking handle.

F. Multipole breakers to automatically open all poles when an overload occurs on one-pole.

G. Enclosure: NEMA 250, Type 12, Industrial Use, 4X - outdoors, wet locations and corrosive areas, unless otherwise shown.

H. Interlock: Enclosure and switch shall interlock to prevent opening cover with switch in the ON position.

I. Do not provide single-pole circuit breakers with handle ties where multipole circuit breakers are shown.

2.07 FUSED DISCONNECT SWITCH, INDIVIDUAL, 0 TO 600 VOLTS

A. UL 98 listed for use and location of installation.

B. NEMA KS 1 and UL 98 Listed for application to system with available short circuit current of 22,000 amps rms symmetrical.

C. Quick-make, quick-break, motor rated, load-break, heavy-duty (HD) type with external markings clearly indicating ON/OFF positions.

D. Suitable for use with 75 degrees C wire at full NFPA 70, 75 degrees C ampacity.

E. Fuse mountings shall reject Class H fuses and accept only current-limiting fuses specified.

F. Enclosure: NEMA 250, Type 12, Industrial Use, 4X - outdoors, wet locations and corrosive areas, unless otherwise shown.

G. Interlock: Enclosure and switch to prevent opening cover with switch in the ON position.

2.08 NONFUSED DISCONNECT SWITCH, INDIVIDUAL, 0 TO 600 VOLTS

A. NEMA KS 1.

B. Quick-make, quick-break, motor rated, load-break, heavy-duty (HD) type with external markings clearly indicating ON/OFF positions.

C. Suitable for use with 75 degrees C wire at full NFPA 70, 75 degrees C ampacity.

D. Enclosure: NEMA 250, Type 12, industrial use, 4X- outdoors, wet locations and corrosive areas, unless otherwise shown.

E. Interlock: Enclosure and switch to prevent opening cover with switch in the ON position.

2.09 FUSE, 0 TO 600 VOLTS

A. Current-limiting, with 200,000 ampere rms interrupting rating.

B. Provide to fit mountings specified with switches and features to reject Class H fuses.

C. Motor and Transformer Circuits, 0- to 600-Volt:
   1. Amperage: 0 to 600.
   2. UL 198E, Class RK-1, dual element, with time delay.
   3. Manufacturers:
      a. Bussmann; Type LPS-RK.
      b. Littlefuse; Type LLS-RK.

D. Motor and Transformer Circuits, 0- to 250-Volt:
   1. Amperage: 0 to 600.
   2. UL 198E, Class RK-1, dual element, with time delay.
   3. Manufacturers:
      a. Bussmann; Type LPN-RK.
      b. Littlefuse; Type LLN-RK.

E. Feeder and Service Circuits, 0- to 600-Volt:
   1. Amperage: 0 to 600.
   2. UL 198E, Class RK-I, dual element, with time delay.
   3. Manufacturers:
      a. Bussmann; Type LPS-RK.
      b. Littlefuse; Type LLS-RK.

F. Feeder and Service Circuits, O- to 250-Volt:
   1. Amperage: 0 to 600.
   2. UL 198E, Class RK-I, dual element, with time delay.
   3. Manufacturers:
      a. Bussmann; Type LPN-RK.
      b. Littleluse; Type LLN-RK.

G. Feeder and Service Circuits, 0- to 600-Volt:
   1. Amperage: 601 to 6,000.
   2. UL 198C, Class L, double O-rings and silver links.
   3. Manufacturers:
      a. Bussmann; Type KRP-C.
      b. Littlefuse; Type KLPC.

2.10 PUSHBUTTON, INDICATING LIGHT, AND SELECTOR SWITCHES

A. Contact Rating: NEMA ICS 2, Type A600.

B. Selector Switch Operating Lever: Standard.

C. Indicating Lights: Push-to-test, LED type. Minimum 22 mm diameter.

D. Pushbutton Color:
   1. ON or START: Black.
   2. OFF or STOP: Red.

E. Pushbuttons and selector switches lockable in the OFF position where indicated.

F. Legend Plate:
   1. Material: Aluminum.
   2. Engraving: 11 character/spaces on one line, 14 character/spaces on each of two lines, as required, indicating specific function.
   3. Letter Height: 7/64 inch.

G. Manufacturers:
   1. Heavy-Duty, Oiltight Type:
      a. General Electric; Type CR 104P.
      b. Square D; Type T.
      c. Cutler-Hammer; Type 10250T.
   2. Heavy-Duty, Watertight, and Corrosion-Resistant Type:
      a. Square D; Type SK.
      b. General Electric; Type CR 104P.
      c. Cutler-Hammer; Type E34.
      d. Crouse-Hinds; Type NCS.

2.11 TERMINAL JUNCTION BOX

A. Cover: Hinged, unless otherwise shown.

B. Terminal Blocks: Provide separate connection point for each conductor entering or leaving box.
   1. Spare Terminal Points: 25 percent.

C. Interior Finish: Paint with white enamel or lacquer.

2.12 TERMINAL BLOCK (0 TO 600 VOLTS)

A. UL 486E and UL 1059.

B. Size components to allow insertion of necessary wire sizes.

C. Capable of termination of all control circuits entering or leaving equipment, panels, or boxes.

D. Screw clamp compression, dead front barrier type, with current bar providing direct contact with wire between the compression screw and yoke.

E. Yoke, current bar, and clamping screw of high strength and high conductivity metal.

F. Yoke shall guide all strands of wire into terminal.

G. Current bar shall ensure vibration-proof connection.

H. Terminals:
   1. Capable of wire connections without special preparation other than stripping.
   2. Capable of jumper installation with no loss of terminal or rail space.
   3. Individual, rail mounted.

I. Marking system: allow use of preprinted or field-marked tags.

J. Manufacturers:
   1. Weidmuller.
   2. Ideal.
   3. Electrovert.

2.13 MAGNETIC CONTROL RELAY

A. NEMA ICS 2, Class A600 (600 volts, 10 amps continuous, 7,200VA make, 720VA break), industrial control with field convertible contacts.

B. Time Delay Relay Attachment:
   1. Pneumatic type, timer adjustable from 0.2 to 60 seconds (minimum).
   2. Field convertible from ON delay to OFF delay and vice versa.

C. Latching Attachment: Mechanical latch having unlatching coil and coil clearing contacts.

D. Manufacturers:
   1. Eaton Electrical; Type M-600.
   2. General Electric; Type CR120B.

2.14 RESET TIMER

A. Drive: Synchronous motor, solenoid operated clutch.

B. Mounting: Semiflush, panel.

C. Contacts: 10-amp, 120-volt.

D. Manufacturers:
   1. Eagle Signal; Bulletin 125.
   2. Automatic Timing and Controls; Bulletin 305.

2.15 ELAPSED TIME METER

A. Drive: Synchronous motor.

B. Range: 0 to 99,999.9 hours, nonreset type.

C. Mounting: Semiflush, panel.

D. Manufacturers:
   1. General Electric; Type 240, 2-1/2-inch Big Look.
   2. Eagle Signal; Bulletin 705.

2.16 MAGNETIC CONTACTOR

A. NEMA ICS 2, UL 508.

B. Electrically operated, electrically held.

C. Main Contacts:
   1. Power driven in one direction with gravity dropout.
   2. Silver alloy with wiping action and arc quenchers.
   3. Continuous-duty, rated 30 amperes, 600-volt.
   4. Three-pole.

D. Control: Two-wire.

E. One normally open and one normally closed auxiliary contacts rated 10 amperes at 480-volt.

F. Enclosure: NEMA 250, Type 12, unless otherwise shown.

G. Manufacturers:
   1. Eaton Electrical.
   2. Square D.
   3. Or Approved Equal.

2.17 MAGNETIC LIGHTING CONTACTOR

A. NEMA ICS 2, UL 508.

B. Electrically operated by dual-acting, single coil mechanism.

C. Inherently interlocked and electrically held in both OPEN and CLOSED position.

D. Main Contacts:
   1. Power driven in both directions.
   2. Double-break, continuous-duty, rated 20 amperes, 600 volts, withstand rating of 22,000 amps rms symmetrical at 250 volts.
   3. Marked for electric discharge lamps, tungsten, and general-purpose loads.

4. Position not dependent on gravity, hooks, latches, or semi-permanent magnets.
5. Capable of operating in any position.
6. Visual indication for each contact.

E. Auxiliary contact relay for three-wire control.

F. One normally open and one normally closed auxiliary contacts rated 10 amperes at 480-volt.

G. Fully rated neutral plate.

H. Provision for remote pilot lamp with use of auxiliary contacts.

I. Clamp type, self-rising terminal plates for solderless connections.

J. Enclosure: NEMA 250, Type 12, Dust-Tight, Drip-Tight, Industrial Use, unless otherwise shown.

K. Manufacturers:
1. Eaton Electrical.
2. Square D.

2.18 INDUSTRIAL CAPACITORS

A. UL 810, NEMA CP1, ANSI C55.1, and NFPA 70, Article 460.

B. Enclosed, outdoor, weatherproof, 3-phase capacitor units containing internally mounted, indicating type, high interrupting-capacity, current limiting fuses and discharge resistors.

C. Units containing PCB dielectric fluid are unacceptable.

D. Kilovar Ratings:
1. Kilovar ratings of capacitors connected to individual motor circuits were selected based on expected motor power factor.
2. Check motor nameplate and manufacturer's power factor and no-load current data for actual motor installed.
3. Reduce capacitor kVAR if required, so the size does not exceed the motor manufacturer's recommended maximum size, and so it does not exceed the value required to raise motor no-load power factor to 0.95.
4. Manufacturers:
   a. ABB.
   b. Square D.

2.19 THERMOSTAT

A. Rating: 7.4 amps continuous, 44 amps locked rotor current at 120 volts and 3.7 amps continuous, 22 amps locked rotor current at 240 volts.

B. Line voltage, single-stage, treated to resist corrosion, dust, dirt, and humidity with sealed SPDT contacts.

C. Heating Adjustment Range: 35 to 100 degrees Fahrenheit.

D. Cooling or Ventilating Adjustment Range: 70 to 140 degrees Fahrenheit.

E. Manufacturer: Honeywell; Type T631F1084.

2.20 DRY TYPE TRANSFORMER (0- TO 600-VOLT PRIMARY)

A. UL 1561, NEMA ST 20, unless otherwise indicated.

B. Self-cooled, 2-winding, UL K-4 rated for nonlinear loads.

C. Insulation Class and Temperature Rise: Manufacturer's standard.

D. Core and Coil:
1. Encapsulated for single-phase units 1/2 to 25 kVA and for 3-phase units 3 to 15 kVA.
2. Thermosetting varnish impregnated for single-phase units 37.5 kVA and above, and for 3-phase units 30 kVA and above.

E. Enclosure:
1. Single-Phase, 3 to 25 kVA: NEMA 250, Type 3R, non-ventilated.
2. Single-Phase, 37-1/2 kVA and Above: NEMA 250, Type 2, ventilated.
3. Three-Phase, 3 to 15 kVA: NEMA 250, Type 3R, nonventilated.
4. Three-Phase, 30 kVA and Above: NEMA 250, Type 2, ventilated.
5. Outdoor Transformers: NEMA 250, Type 3R.

F. Wall Bracket: For single-phase units, 15 to 37-1/2 kVA, and for 3-phase units, 15 to 30 kVA.

G. Voltage Taps:
1. Single-Phase, 3 to 10 kVA: Two 2-1/2 percent, full capacity; 2 above and 2 below normal voltage rating.
2. Single-Phase, 15 kVA and Above: Two 2-1/2 percent, full capacity; 2 above and 2 below normal voltage rating.
3. Three-Phase, 3 to 15 kVA: Two 2-1/2 percent, full capacity; 2 above and 2 below normal voltage rating.
4. Three-Phase, 30 kVA and Above: Two 2-1/2 percent, full capacity; 2 above and 2 below normal voltage rating.

H. Impedance: 4.5 percent minimum on units 75 kVA and larger.

I. Maximum Sound Level: NEMA ST 20:
1. 40 decibels for 0 to 9 kVA.
2. 45 decibels for 10 to 50 kVA.
3. 50 decibels for 51 to 150 kVA.
4. 55 decibels for 151 to 300 kVA.
5. 60 decibels for 301 to 500 kVA.

J. Vibration Isolators:
1. Rated for transformer's weight.
2. Isolation Efficiency: 99 percent, at fundamental frequency of sound emitted by transformer.

3. Less Than 30 kVA: Isolate entire unit from structure with external vibration isolators.
4. 30 kVA and Above: Isolate core and coil assembly from transformer enclosure with integral vibration isolator.

K. Manufacturers:
1. Eaton
2. Square D.
3. Or approved equal.

2.21 LOW VOLTAGE, SECONDARY SURGE PROTECTIVE EQUIPMENT

A. NEMA LA1, ANSI C62. 11.

B. Surge Capacitor:
1. Impregnated with non-PCB, biodegradable dielectric fluid.
2. Integral discharge resistor which will drain residual voltage to 50 volts crest in less than I minute after disconnection from circuit.

C. Arrestor: High strength metal oxide valve elements enclosed in high strength, corrosion resistant, molded resin housing.

D. Equip capacitor and arrestor with mounting nipple, flat washer, and nut suitable for knockout or bracket mounting.

2.22 SUBMERSIBLE CABLE SPLICING KITS

A. Submersible cable splice kits shall be inline resin cable splice kit, UL listed 486D.

B. To insulate and seal single conductor, unshielded cable.

C. Provide and install appropriate cable connectors as per cables to be spliced.

D. Manufacturers:
1. 3M Scotchcast Inline Resin Cable Splice Kit;
2. Or approved equal.

2.23 SUPPORT AND FRAMING CHANNELS

A. Material:
1. Dry indoors - galvanized.
2. All Other Areas: ASTM A167, Type 316 stainless steel or fiber-reinforced epoxy, as required.

B. Finish:
1. Dry indoors - galvanized.
2. All Other Areas: ASTM A167, Type 316 stainless steel or fiber-reinforced epoxy, as required.

C. Inserts: Continuous.

D. Beam Clamps: Gray cast iron.

E. Manufacturers:
   1. B-Line.
   2. Unistrut.

2.24 NAMEPLATES

A. Material: Laminated plastic.

B. Attachment Screws: Stainless steel.

C. Color: White, engraved to a black core.

D. Engraving:
   1. Terminal Junction Boxes: Name of motor controlled on one, two, or three lines, as required.

E. Letter Height:
   1. Terminal Junction Boxes: 1/8 inch.

2.25 SURGE PROTECTIVE DEVICES

A. This section describes the material and installation requirements for surge protective devices (SPD) in switchboards, panelboards, and motor control centers for the protection of all AC electrical circuits.

B. SPD shall be listed and component recognized in accordance with UL 1449 and UL 1283.

C. SPD shall be installed and warranted by and shipped from the electrical distribution equipment manufacturer's factory.

D. SPD shall provide surge current diversion paths for all modes of protection; L-L, L-N, L-G, N-G in WYE systems, and L-L, L-G in DELTA systems.

E. SPD shall be modular in design. Each module shall be fused with a surge rated fuse.

F. A UL approved disconnect switch shall be provided as a means of disconnect in the switchboard device only.

G. SPD shall meet or exceed the following criteria:
   1. Maximum surge current capability (single pulse rated) shall be:
      a. Service entrance switchboard 300kA.
      b. Branch panelboards 150kA.
      c. Motor control centers 80kA.
   2. UL 1449 (latest edition) Listed and Recognized Component Suppression Voltage Ratings shall not exceed the following:

Voltage	L-N	L-G	N-G
208Y/120	400V	400V	400V
480Y/277	800V	800V	800V

H. SPD shall have a minimum EMI/RFI filtering of -44dB at 100kHz with an insertion ration of 50:1 using MIL STD. 220A methodology.

I. SPD shall be provided with 1 set of NO/NC dry contacts.

J. SPD shall have a warranty for a period of five years, incorporating unlimited replacements of suppressor parts if they are destroyed by transients during the warranty period. Warranty will be the responsibility of the electrical distribution equipment manufacturer.

K. Approve manufactures are:
   1. Eaton Electrical.
   2. No Approved Equal.

PART 3 EXECUTION

3.01 GENERAL

A. Install equipment in accordance with NECA 5055.

3.02 OUTLET AND DEVICE BOXES

A. Install suitable for conditions encountered at each outlet or device in the wiring or raceway system, sized to meet NFPA 70 requirements.

B. Size:
   1. Depth: Minimum 2 inches, unless otherwise required by structural conditions. Box extensions not permitted.
      a. Hollow Masonry Construction: Install with sufficient depth such that conduit knockouts or hubs are in masonry void space.
   2. Ceiling Outlet: Minimum 4-inch octagonal sheet steel device box, unless otherwise required for installed fixture.
   3. Switch and Receptacle: Minimum 2-inch by 4-inch sheet steel device box.

C. Locations:
   1. Drawing locations are approximate.
   2. To avoid interference with mechanical equipment or structural features, relocate outlets as directed by Engineer.
   3. Light Switch: Install on lock side of doors.
   4. Light Fixture: Install in symmetrical pattern according to room layout unless otherwise shown.

D. Mounting Height:
   1. General:
      a. Measured to centerline of box.
      b. Where specified heights do not suit building construction or finish, mount as directed by Engineer.
   2. Light Switch: 48 inches above floor.
   3. Thermostat: 54 inches above floor.
   4. Telephone Outlet: 6 inches above counter tops or 15 inches above floor.
   5. Wall Mounted Telephone Outlet: 52 inches above floor.
   6. Convenience Receptacle:
      a. General Interior Areas: 15 inches above floor.

b. General Interior Areas (Counter Tops): Install device plate bottom or side flush with top of splashback, or 6 inches above countertops without splashback.
c. Industrial Areas, Workshops: 48 inches above floor.
d. Outdoor, All Areas: 24 inches above finished grade.

7. Special-Purpose Receptacle: 54 inches above floor or as shown.

E. Install plumb and level.

F. Flush Mounted:
1. Install with concealed conduit.
2. Install proper type extension rings or plaster covers to make edges of boxes flush with finished surface.
3. Holes in surrounding surface shall be no larger than required to receive box.

G. Support boxes independently of conduit by attachment to building structure or structural member.

H. Install bar hangers in frame construction, or fasten boxes directly with wood screws on wood, bolts and expansion shields on concrete or brick, toggle bolts on hollow masonry units, and machine screws threaded into steelwork.

I. Threaded studs driven in by powder charge and provided with lock washers and nuts are acceptable in lieu of expansion shields.

J. Provide plaster rings where necessary.

K. Boxes embedded in concrete or masonry need not be additionally supported.

L. Install stainless steel mounting hardware in industrial areas.

M. Boxes Supporting Fixtures: Provide means of attachment with adequate strength to support fixture.

N. Open no more knockouts in sheet steel device boxes than are required; seal unused openings.

O. Box Type (Steel Raceway System):
1. Exterior Locations:
a. Exposed Raceways: Cast metal.
b. Concealed Raceways: Cast metal.
c. Concrete Encased Raceways: Cast metal.
d. Class I, II, or III Hazardous Areas: Cast metal.
2. Interior Dry Locations:
a. Exposed Rigid Conduit: Cast metal.
b. Exposed EMT: Sheet steel.
c. Concealed Raceways: Sheet steel.
d. Concrete Encased Raceways: Cast metal.
e. Lighting Circuits, Ceiling: Sheet steel.
f. Class I, II, or III Hazardous Areas: Cast metal.
3. Interior Wet Locations:
a. Exposed Raceways: Cast metal.
b. Concealed Raceways: Cast metal.

c. Concrete Encased Raceways: Cast metal.
d. Lighting Circuits, Ceiling: Sheet steel.
e. Class I, II, or III Hazardous Areas: Cast metal.

4. Cast-In-Place Concrete Slabs: Sheet steel.

P. Box Type (Rigid Aluminum Raceway System): Cast aluminum.

Q. Box Type (Nonmetallic Raceway System):
1. Corrosive Locations: Nonmetallic.
2. Exposed Raceways: Nonmetallic.
3. Concealed Raceways: Nonmetallic.
4. Concrete Encased Raceways: Nonmetallic.

R. Box Type, Corrosive Locations (PVC-Coated Rigid Galvanized Steel Raceway System): PVC coated cast metal.

3.03 JUNCTION AND PULL BOXES

A. Install where shown and where necessary to terminate, tap-off, or redirect multiple conduit runs.

B. Install pull boxes where necessary in raceway system to facilitate conductor installation.

C. Install in conduit runs at least every 150 feet or after the equivalent of three right angle bends.

D. Use outlet boxes as junction and pull boxes wherever possible and allowed by applicable codes.

E. Installed boxes shall be accessible.

F. Do not install on finished surfaces.

G. Install plumb and level.

H. Support boxes independently of conduit by attachment to building structure or structural member.

I. Install bar hangers in frame construction, or fasten boxes directly with wood screws on wood, bolts and expansion shields on concrete or brick, toggle bolts on hollow masonry units, and machine screws or welded threaded studs on steelwork.

J. Threaded studs driven in by powder charge and provided with lock washers and nuts are acceptable in lieu of expansion shields.

K. Boxes embedded in concrete or masonry need not be additionally supported.

L. At or Below Grade:
1. Install boxes for below grade conduits flush with finished grade in locations outside of paved areas, roadways, or walkways.
2. If adjacent structure is available, box may be mounted on structure surface just above finished grade in accessible but unobtrusive location.

3. Obtain Engineer's written acceptance prior to installation in paved areas, roadways, or walkways.
4. Use boxes and covers suitable to support anticipated weights.

M. Flush Mounted:
1. Install with concealed conduit.
2. Holes in surrounding surface shall be no larger than required to receive box.
3. Make edges of boxes flush with final surface.

N. Mounting Hardware:
1. Non-corrosive Interior Areas: Galvanized.
2. All Other Areas: Stainless steel.

O. Location/Type:
1. Finished, Indoor, Dry: NEMA 250, Type 1.
2. Unfinished, Indoor, Dry: NEMA 250, Type 12.
3. Unfinished, Indoor and Outdoor, Wet and Corrosive: NEMA 250, Type 4X.
4. Unfinished, Indoor and Outdoor, Wet, Dust, or Oil: NEMA 250, Type 13.
5. Unfinished, Indoor and Outdoor, Hazardous: NEMA 250, Type 7 and Type 9, where indicated.
6. Underground Conduit: Concrete Encased.
7. Corrosive Locations: Nonmetallic.

3.04 WIRING DEVICES

A. Switches:
1. Mounting Height: See Paragraph OUTLET AND DEVICE BOXES.
2. Install with switch operation in vertical position.
3. Install single-pole, two-way switches such that toggle is in up position when switch is on.

B. Receptacles:
1. Install with grounding slot down except where horizontal mounting is shown, in which case install with neutral slot up.
2. Ground receptacles to boxes with grounding wire only.
3. Weatherproof Receptacles:
a. Install in cast metal box.
b. Install such that hinge for protective cover is above receptacle opening.
4. Ground Fault Interrupter: Install feed-through model at locations where ground fault protection is specified for "downstream" conventional receptacles.
5. Special-Purpose Receptacles: Install in accordance with manufacturer's instructions.

C. Multioutlet Surface Raceway System:
1. Install in accordance with manufacturer's instructions.
2. Wire alternate outlets to each circuit where two-circuit, three-wire supply is shown.

3.05 DEVICE PLATES

A. Securely fasten to wiring device; ensure a tight fit to the box.

B. Flush Mounted: Install with all four edges in continuous contact with finished wall surfaces without use of mats or similar materials. Plaster fillings will not be acceptable.

C. Surface Mounted: Plate shall not extend beyond sides of box unless plates have no sharp corners or edges.

D. Install with alignment tolerance to box of 1/16 inch.

E. Engrave with designated titles.

F. Types (Unless Otherwise Shown):
   1. Office: Stainless Steel.
   2. Exterior: Weatherproof.
   3. Interior:
      a. Flush Mounted Boxes: Stainless Steel.
      b. Surface Mounted, Cast Metal Boxes: Cast metal.
      c. Surface Mounted, Sheet Steel Boxes: Stainless Steel.
      d. Surface Mounted, Nonmetallic Boxes: Plastic.

3.06 PUSHBUTTON, INDICATING LIGHT, AND SELECTOR SWITCH

A. Heavy-Duty, Oiltight Type: Locations (Unless Otherwise Shown): Nonhazardous, indoor, dry locations, including motor control centers, control panels, and individual stations.

B. Heavy-Duty, Watertight, and Corrosion-Resistant Type:
   1. Locations (Unless Otherwise Shown): Nonhazardous, outdoor, or normally wet areas.
   2. Mounting: NEMA 250, Type 4X enclosure.

3.07 TERMINAL JUNCTION BOX

A. Install in accordance with Paragraph JUNCTION AND PULL BOXES.

B. Label each block and terminal with permanently attached, non-destructible tag.

C. Do not install on finished outdoor surfaces.

D. Location:
   1. Finished, Indoor, Dry: NEMA 250, Type 1.
   2. Unfinished, Indoor, Dry: NEMA 250, Type 12.
   3. Unfinished, Indoor and Outdoor, Wet and Corrosive: NEMA 250, Type 4X.
   4. Unfinished, Indoor and Outdoor, Wet, Dust, or Oil: NEMA 250, Type 13.

3.08 LIGHTING AND POWER DISTRIBUTION PANELBOARD

A. Install securely, plumb, in-line and square with walls.

B. Install top of cabinet 6 feet above floor unless otherwise shown.

C. Provide typewritten circuit directory for each panelboard.

3.09 INDUSTRIAL CAPACITORS

A. Provide suitable hangers or mounting brackets for wall or ceiling mounting.

3.10 DRY TYPE TRANSFORMER (0- TO 600-VOLT PRIMARY)

A. Load external vibration isolator such that no direct transformer unit metal is in direct contact with mounting surface.

B. Provide moistureproof, flexible conduit for electrical connections.

C. Connect voltage taps to achieve (approximately) rated output voltage under normal plant load conditions.

D. Provide wall brackets for single-phase units, 15 to 167-1/2 kVA, and 3-phase units, 15 to 112 kVA.

3.11 SUPPORT AND FRAMING CHANNEL

A. Furnish zinc-rich primer; paint cut ends prior to installation, where applicable.

B. Install where required for mounting and supporting electrical equipment and raceway systems.

3.12 MOTOR SURGE PROTECTION

A. Ground in accordance with NFPA 70.

B. Low Voltage: Ground terminals to equipment bus.

END OF SECTION

SECTION 16110

RACEWAYS

PART 1 GENERAL

1.01 REFERENCES

A. The following is a list of standards that may be referenced in this section:
   1. American Association of State Highway and Transportation Officials (AASHTO): Division I, Standard Specifications for Highway Bridges, Fourteenth Edition.
   2. American National Standards Institute (ANSI):
      a. C80.1 - Rigid Steel Conduit-Zinc Coated.
      b. C80.3 - Electrical Metallic Tubing-Zinc Coated.
   3. ASTM International (ASTM):
      a. A123 El - Standard Specification for Zinc-Coated (Galvanized) Coatings on Iron and Steel Products.
      b. C857 - Standard Practice for Minimum Structural Design Loading for Underground Precast Concrete Utility Structures.
   4. National Electrical Contractor's Association, Inc. (NECA): 5055, Standard of Installation.
   5. National Electrical Manufacturers Association (NEMA):
      a. RN 1 - Polyvinyl-Chloride (PVC) Externally Coated Galvanized Rigid Steel Conduit and Intermediate Metal Conduit.
      b. TC 2 - Electrical Plastic Tubing (EPT) and Conduit (EPC-40 and EPC-80).
      c. TC 3 - PVC Fittings for Use with Rigid PVC Conduit and Tubing.
      d. TC 6 - PVC and ABS Plastic Utilities Duct for Underground Installation.
   6. National Fire Protection Association (NFPA): 70, National Electrical Code. (NEC).
   7. Underwriters Laboratories, Inc. (UL):
      a. 1 - Standard for Safety Flexible Metal Conduit.
      b. 6 - Standard for Safety Rigid Metal Conduit.
      c. 360 - Standard for Safety Liquid-Tight Flexible Steel Conduit.
      d. 514B - Standard for Safety Fittings for Conduit and Outlet Boxes.
      e. 514C - Standard for Safety Nonmetallic Outlet Boxes, Flush-Device Boxes, and Covers.
      f. 651 - Standard for Safety Schedule 40 and 80 PVC Conduit.
      g. 651A - Standard for Safety Type EB and Rigid PVC Conduit and HDPF Conduit.
      h. 870 - Standard for Safety Wireways, Auxiliary Gutters, and Associated Fittings.
      i. 1660 - Standard for Safety Liquid-Tight Flexible Nonmetallic Conduit.

1.02 SUBMITTALS

A. Shop Drawings:
   1. Manufacturer's Literature:
      a. Rigid galvanized steel conduit.
      b. PVC Schedule 40 and schedule 80 conduit.
      c. PVC-coated rigid galvanized steel conduit.

d. Flexible metal, liquid-tight conduit.
e. Flexible, nonmetallic, liquid-tight conduit.
f. Conduit fittings.
g. Wireways.

2. Precast Manholes and Handholes:
   a. Dimensional drawings and descriptive literature.
   b. Traffic loading calculations.
   c. Accessory information.
3. Conduit Layout:
   a. Plan and section type, showing arrangement and location of conduit required for:
      1) Low voltage feeder and branch circuits.
      2) Instrumentation and control systems.
      3) Communications systems.
      4) Empty conduit for future use.
   b. Reproducible drawings; scale not greater than 1/2 inch equals 1 foot.
      1) Equipment and machinery proposed for bending metal conduit.
      2) Method for bending PVC conduit less than 30 degrees.

1.03 UL COMPLIANCE

A. Materials manufactured within scope of Underwriters Laboratories shall conform to UL Standards and have an applied UL listing mark.

PART 2 PRODUCTS

2.01 CONDUIT AND TUBING

A. Rigid Galvanized Steel Conduit (RGS):
   1. Meet requirements of ANSI C80.1 and UL6.
   2. Material: Hot-dip galvanized, with chromated protective layer.

B. Electric Metallic Tubing (EMT):
   1. Meet requirements of ANSI C80.3 and UL 797.
   2. Material: Hot-dip galvanized, with chromated and lacquered protective layer.

C. PVC Schedule 40 Conduit:
   1. Meet requirements of NEMA TC 2 and UL 651.
   2. UL listed for concrete encasement, underground direct burial, concealed or direct sunlight exposure, and 90 degrees C insulated conductors.

D. PVC-Coated Rigid Galvanized Steel Conduit:
   1. Meet requirements of NEMA RN 1.
   2. Material:
      a. Conduit: Meet requirements of ANSI C80.1 and UL 6.
      b. PVC Coating: 40 mils nominal thickness, bonded to metal.

E. Flexible Metal, Liquid-Tight Conduit:
   1. UL 360 listed for 105 degrees C insulated conductors.
   2. Material: Galvanized steel, with an extruded PVC jacket.

F. Rigid Aluminum Conduit:
   1. Meet requirements of ANSI C80.5 and UL 6.
   2. Material: Type 6063, copper-free aluminum alloy.

G. Flexible, Nonmetallic, Liquid-Tight Conduit:
   1. Material: PVC core with fused flexible PVC jacket.
   2. UL 1660 listed for:
      a. Dry Conditions: 80 degrees C insulated conductors.
      b. Wet Conditions: 60 degrees C insulated conductors.
   3. Manufacturers:
      a. Carlon; Carflex or X-Flex.
      b. T & B; Xtraflex LTC or EFC.

2.02 FITTINGS

A. Rigid Galvanized Steel Conduit:
   1. General:
      a. Meet requirements of UL 514B.
      b. Type: Threaded, galvanized. Set screw fittings not permitted.
   2. Bushing:
      a. Material: Malleable iron with integral insulated throat, rated for 150 degrees C.
      b. Manufacturers:
         1) Thomas & Betts; Type BIM.
         2) O-Z/Gedney; Type HB.
   3. Grounding Bushing:
      a. Material: Malleable iron with integral insulated throat rated for 150 degrees C, with solderless lugs.
      b. Manufacturers:
         1) Appleton; Series GIB.
         2) O-Z/Gedney; Type HBLG.
   4. Conduit Hub:
      a. Material: Malleable iron with insulated throat.
      b. Manufacturers:
         1) O-Z/Gedney; Series CH.
         2) T & B; Series 370.
   5. Conduit Bodies:
      a. Material: Malleable iron, sized as required by NFPA 70.
      b. Manufacturers (For Normal Conditions):
         1) Appleton; Form 35 threaded Unilets.
         2) Crouse-Hinds; Form 7 or 8 threaded condulets.
         3) Killark; Series O Electrolets.
      c. Manufacturers (For Hazardous Locations):
         1) Appleton.
         2) Crouse-Hinds.
         3) Killark.
   6. Couplings: As supplied by conduit manufacturer.
   7. Conduit Sealing Fitting Manufacturers:
      a. Appleton; Type EYF, EYM, or ESU.
      b. Crouse-Hinds; Type EYS or EZS.
      c. Killark; Type EY or EYS.

8. Drain Seal Manufacturers:
    a. Appleton; Type SF.
    b. Crouse-Hinds; Type EYD or EZD.
9. Drain/Breather Fitting Manufacturers:
    a. Appleton; Type ECDB.
    b. Crouse-Hinds; ECD.
10. Expansion Fitting Manufacturers:
    a. Deflection/Expansion Movement:
        1) Appleton; Type DF.
        2) Crouse-Hinds; Type XD.
    b. Expansion Movement Only:
        1) Appleton; Type XJ.
        2) Crouse-Hinds; Type XJ.
11. Cable Sealing Fittings:
    a. To form watertight non-slip cord or cable connection to conduit.
    b. For Conductors With OD of 1/2 Inch or Less: Neoprene bushing at connector entry.
    c. Manufacturers:
        1) Crouse-Hinds; CGBS.
        2) Appleton; CG-S.

B. Electric Metallic Tubing:
1. Meet requirements of UL 514B.
2. Type: Steel body and locknuts with steel or malleable iron compression nuts. Set screw and drive-on fittings not permitted.
3. Compression Ring: Stainless steel.
4. Coupling Manufacturers:
    a. Appleton; Type 95T.
    b. Crouse-Hinds; Type CPR.
5. Connector Manufacturers:
    a. Appleton; Type 86T.
    b. Crouse-Hinds; Type CPR.

C. Rigid Aluminum Conduit:
1. General:
    a. Meet requirements of UL 514B.
    b. Type: Threaded, copper-free. Set screw fittings not permitted.
2. Insulated Bushing:
    a. Material: Cast aluminum, with integral insulated throat, rated for 150 degrees Celsius.
    b. Manufacturer: O-Z/Gedney; Type AB.
3. Grounding Bushing:
    a. Material: Cast aluminum with integral insulated throat, rated for 150 degrees, with solderless lugs.
    b. Manufacturer: O-Z/Gedney; Type ABLG.
4. Conduit Hub:
    a. Material: Cast aluminum, with insulated throat.
    b. Manufacturers:
        1) O-Z/Gedney; Type CHA.
        2) T & B; Series 370AL.

5. Conduit Bodies:
    a. Manufacturers (For Normal Conditions):
        1) Appleton; Form 85 threaded Unilets.
        2) Crouse-Hinds; Mark 9 or Form 7-SA threaded condulets.
        3) Killark; Series O Electrolets.
    b. Manufacturers (For Hazardous Locations):
        1) Appleton.
        2) Crouse-Hinds.
        3) Killark.
6. Couplings: As supplied by conduit manufacturer.
7. Conduit Sealing Fitting Manufacturers:
    a. Appleton; Type EYF-AL or EYM-AL.
    b. Crouse-Hinds; Type EYS-SA or EZS-SA.
    c. Killark; Type EY or EYS.
8. Drain Seal Manufacturers:
    a. Appleton; Type EYDM-A.
    b. Crouse-Hinds; Type EYD-SA or EZD-SA.
9. Drain/Breather Fitting Manufacturers:
    a. Appleton; Type ECDB.
    b. Crouse-Hinds; ECD.
10. Expansion Fitting Manufacturers:
    a. Deflection/Expansion Movement: Steel City; Type DF-A.
    b. Expansion Movement Only: Steel City; Type AF-A.
11. Cable Sealing Fittings: To form watertight nonslip cord or cable connection to conduit:
    a. Bushing: Neoprene at connector entry.
    b. Manufacturer: Appleton CG-S.

D. PVC Conduit and Tubing:
1. Meet requirements of NEMA TC-3.
2. Type: PVC, slip-on.

E. PVC-Coated Rigid Galvanized Steel Conduit:
1. Meet requirements of UL 514B.
2. Type: Rigid galvanized steel, PVC coated by conduit manufacturer.
3. Overlapping pressure sealing sleeves.
4. Conduit Hangers, Attachments, and Accessories: PVC-coated.

F. Flexible Metal, Liquid-Tight Conduit:
1. Metal insulated throat connectors with integral nylon or plastic bushing rated for 105 degrees C.
2. Insulated throat and sealing O-rings.
3. Long design type extending outside of box or other device at least 2 inches.
4. Manufacturer: T & B; Series 5300.

G. Flexible, Nonmetallic, Liquid-Tight Conduit: Meet requirements of UL 514B.
1. Type: One-piece fitting body, complete with lock nut, O-ring, threaded ferrule, sealing ring, and compression nut.
2. Manufacturers:
    a. Carlon; Type LT.
    b. Kellems; Polytuff.
    c. T & B; LT Series.

H. Watertight Entrance Seal Device:
   1. New Construction:
      a. Material: Oversized sleeve, malleable iron body with sealing ring, pressure ring, grommet seal, and pressure clamp.
      b. Manufacturer: O-Z/Gedney; Type FSK or WSK, as required.
   2. Gored-Hole Application:
      a. Material: Assembled dual pressure disks, neoprene sealing ring, and membrane clamp.
      b. Manufacturer: O-Z/Gedney; Series CSM.

I. Hazardous Locations: Approved for use in the atmosphere involved.
   1. Manufacturer: Crouse-Hinds; Type ECGJH.

J. Corrosive Locations:
   1. Material: 40-mil PVC-coated rigid steel.
   2. Manufacturers:
      a. Robroy Industries.
      b. Carlon.
      c. Crouse-Hinds.

2.03 WIREWAYS

A. Meet requirements of UL 870.

B. Type: Steel-enclosed, with removable, hinged cover.

C. Rating: Outdoor rain-tight if outdoor, and indoor if indoor.

D. Finish: Gray, baked enamel.

E. Manufacturers:
   1. Square D.
   2. B-Line Systems, Inc.

2.04 PRECAST MANHOLES AND HANDHOLES

A. Concrete Strength: Minimum, 3,000 psi compressive, in 28 days.

B. Loading: AASHTO Division 1, H-20 in accordance with ASTM C857.

C. Access: Provide cast concrete 6- or 12-inch risers and access adapters between top of manhole and finished grade at required elevations.

D. Drainage:
   1. Slope floors toward drain points, leaving no pockets or other non-draining areas.
   2. Provide drainage outlet or sump at low point of floor constructed with a heavy, cast iron, slotted or perforated hinged cover, and 4-inch minimum outlet and outlet pipe.

E. Raceway Entrances:
   1. Provide on all four sides.

2. For raceways to be installed under this Contract, provide knockout panels or precast individual raceway openings.
3. At entrances where raceways are to be installed by others, provide minimum 12-inch high by 24-inch wide knockout panels for future raceway installation.

F. Embedded Pulling Iron:
1. Material: 3/4-inch diameter stock, fastened to overall steel reinforcement before concrete is placed.
2. Location:
   a. Wall: Opposite each raceway entrance and knockout panel for future raceway entrance.
   b. Floor: Centered below manhole or handhole cover.

G. Cable Racks:
1. Arms and Insulators: Adjustable, of sufficient number to accommodate cables for each raceway entering or leaving manhole, including spares.
2. Wall Attachment:
   a. Adjustable inserts in concrete walls. Bolts or embedded studs not permitted.
   b. Insert Spacing: Maximum 3-foot on center entire inside perimeter of manhole.
   c. Arrange so that spare raceway ends are clear for future cable installation.

H. Manhole Frames and Covers:
1. Material: Machined cast iron.
2. Diameter: 32 inches.
3. Cover Type: Indented, solid top design, with two drop handles each.
4. Cover Loading: AASHTO Division I, H-20.
5. Cover Designation: Cast, on upper side, in integral letters, minimum 2 inches in height, appropriate titles:
   a. Above 600 Volts: ELECTRIC HV.
   b. 600 Volts and Below: ELECTRIC LV.
   c. TELEPHONE.
   d. Instrumentation: SIGNAL.

I. Manhole/handhole Frames and Covers:
1. Material: Steel, hot-dipped galvanized.
2. Cover Type: Solid, bolt-on, of checkered design.
3. Cover Loading: H-20.
4. Cover Designation: Burn by welder, on upper side in integral letters, minimum 2 inches in height, appropriate titles:
   a. 600 Volts and Below: ELECTRIC LV.
   b. TELEPHONE.
   c. Instrumentation: SIGNAL.

J. Hardware: Steel, hot-dip galvanized.

K. Furnish knockout for ground rod in each handhole and manhole.

L. Manufacturers:
1. U.S. Precast.
2. Brooks Products, Inc.
3. Penn-Cast Products, Inc.

4. Concrete Conduit Co.
5. Associated Concrete Products, Inc.
6. Utility Vault Co.
7. Pipe, Inc.

2.05 ACCESSORIES

A. Duct Bank Spacers:
   1. Type: Nonmetallic, interlocking, for multiple conduit sizes.
   2. Suitable for all types of conduit.
   3. Manufacturer: Underground Device, Inc.; Type WUNPEECE.

B. Identification Devices:
   1. Raceway Tags:
      a. Material: Permanent, nylon.
      b. Shape: Round.
      c. Raceway Designation: Pressure stamped, embossed, or engraved.
      d. Tags relying on adhesives or taped-on markers not permitted.
   2. Warning Tape:
      a. Material: Polyethylene, 4-mil gauge.
      b. Color: Red.
      c. Width: Minimum 6-inch.
      d. Designation: Warning on tape that electric circuit is located below tape.
      e. Manufacturers:
         1) Blackburn, Type RT.
         2) Griffolyn Co.
   3. Buried Raceway Marker:
      a. Material: Sheet bronze, consisting of double-ended arrows, straight for straight runs and bent at locations where change direction runs.
      b. Designation: Incise to depth of 3/32 inch, ELECTRIC CABLES. in letters 1/4-inch high.
      c. Minimum Dimension: 1/4-inch thick, 10 inches long, and 3/4-inch wide.

C. Raceway Coating:
   1. Material: Bitumastic or plastic tape coating.
   2. Manufacturers:
      a. Koppers bitumastic; No. 505.
      b. Scotchwrap; No. 51, plastic tape.

D. Wraparound Duct Band:
   1. Material: Heat-shrinkable, cross-linked polyolefin, pre-coated with hot-melt adhesive.
   2. Manufacturer: Raychem; Type TWDB.

PART 3 EXECUTION

3.01 GENERAL

A. Conduit and Tubing sizes shown are based on the use of copper conductors. Reference Section 16120, CONDUCTORS, concerning conduit sizing for aluminum conductors.

B. All installed Work shall comply with NECA 5055.

C. Crushed or deformed raceways not permitted.

D. Maintain raceway entirely free of obstructions and moisture.

E. Immediately after installation, plug or cap raceway ends with watertight and dust-tight seals until time for pulling in conductors.

F. Sealing Fittings: Provide drain seal in vertical raceways where condensate may collect above sealing fitting.

G. Avoid moisture traps where possible. When unavoidable in exposed conduit runs, provide junction box and drain fitting at conduit low point.

H. Group raceways installed in same area.

I. Proximity to Heated Piping: Install raceways minimum 12 inches from parallel runs.

J. Follow structural surface contours when installing exposed raceways. Avoid obstruction of passageways.

K. Run exposed raceways parallel or perpendicular to walls, structural members, or intersections of vertical planes.

L. Block Walls: Do not install raceways in same horizontal course with reinforcing steel.

M. Install watertight fittings in outdoor, underground, or wet locations.

N. Paint threads, before assembly of fittings, of galvanized conduit installed in exposed or damp locations with zinc-rich paint or liquid galvanizing compound.

O. All metal conduit to be reamed, burrs removed, and cleaned before installation of conductors, wires, or cables.

P. Do not install raceways in concrete equipment pads, foundations, or beams.

Q. Horizontal raceways installed under floor slabs shall lie completely under slab, with no part embedded within slab.

R. Install concealed, embedded, and buried raceways so that they emerge at right angles to surface and have no curved portion exposed.

3.02 INSTALLATION IN CAST-IN-PLACE STRUCTURAL CONCRETE

A. Minimum cover 1-1/2 inches.

B. Provide support during placement of concrete to ensure raceways remain in position.

C. Floor Slabs:
   1. Outside diameter of conduit not to exceed one-third of the slab thickness.
   2. Separate conduit by minimum six times conduit outside diameter, except at crossings.

D. Conduit embedded in concrete structures shall not, with fittings, displace more than four percent (4 percent) of area of cross section of column. Embedded conduits, other than those merely passing through, shall not be larger in outside diameter than one-third (1/3) of thickness of slab, wall or beam in which embedded, nor shall they be spaced closer than three diameters of larger conduit on center; or so located as to unduly impair strength of construction. Concrete covering of conduits and fittings shall be 1-1/2 inch minimum.

E. Conduits or sleeves passing through slabs, walls or beams shall be placed as not to unduly impair strength of construction.

F. Conduits or sleeves passing through slabs, walls or beams larger than two inches inside diameter or spaced less than three diameters of largest conduit on center, shall be installed only when specifically permitted by the Structural Engineer.

G. Metal conduits penetrating concrete slabs, walls or beams, at or below grade level or in any damp or wet location, shall be wrapped or coated a minimum of three inches on each side of air-concrete interface.

3.03 CONDUIT APPLICATION

A. Diameter: Minimum 3/4 inch.

B. Exterior, Exposed:
   1. Rigid Aluminum.

C. Interior, Exposed:
   1. Rigid Aluminum.
   2. Electric metallic tubing for ceiling portion of lighting circuits in a conditioned environment.

D. Interior, Concealed (Not Embedded in Concrete):
   1. Rigid Aluminum.

E. Direct Earth Burial: PVC Schedule 80.

F. Concrete-Encased Raceways: PVC Schedule 40.

G. Under Slabs-On-Grade: PVC Schedule 40.

H. Corrosive Areas, Exterior: PVC-coated rigid galvanized steel.

I. Corrosive Areas, Interior: PVC-coated rigid galvanized steel.

J. Conduits between VFD'S and motors: PVC schedule 40 conduit for armored cable (inside and outside).

K. Lightning Protection: PVC Schedule 40.

3.04 CONNECTIONS

A. For motors, electrically operated valves, instrumentation, and other equipment where flexible connection is required to minimize vibration:
   1. Conduit Size 4 Inches or Less: Flexible metal, liquid-tight conduit.
   2. Conduit Size Over 4 Inches: Nonflexible.
   3. Corrosive Areas: Flexible, nonmetallic, liquid or PVC-coated metallic, liquid-tight.
   4. Length: 18-inch minimum, 60-inch maximum, of sufficient length to allow movement or adjustment of equipment.

B. Lighting Fixtures in Dry Areas: Flexible steel, non-liquid-tight conduit.

C. Outdoor Areas, Process Areas Exposed to Moisture, and Areas required being Oil tight and Dust-Tight: Flexible metal, liquid-tight conduit.

D. Transition From Underground or Concrete Embedded to Exposed: PVC Coated Rigid galvanized steel conduit.

E. Under Equipment Mounting Pads: Rigid galvanized steel conduit.

F. Exterior Light Pole Foundations: Rigid galvanized steel conduit.

3.05 PENETRATIONS

A. Make at right angles, unless otherwise shown.

B. Notching or penetration of structural members, including footings and beams, not permitted.

C. Fire-Rated Walls, Floors, or Ceilings: Fire-stop openings around penetrations to maintain fire-resistance rating.

D. Apply single layer of wraparound duct band to all metallic conduit in contact with concrete floor slabs to a point 2 inches above concrete surface.

E. Concrete Walls, Floors, or Ceilings (Aboveground): Provide non-shrink grout dry-pack, or use watertight seal device.

F. Entering Structures:
   1. General: Seal raceway at the first box or outlet with minimum 2 inches thick expandable plastic compound to prevent the entrance of gases or liquids from one area to another.
   2. Concrete Roof or Membrane Waterproofed Wall or Floor:
      a. Provide a watertight seal.
      b. Without Concrete Encasement: Install watertight entrance seal device on each side.
      c. With Concrete Encasement: Install watertight entrance seal device on the accessible side.
      d. Securely anchor malleable iron body of watertight entrance seal device into construction with one or more integral flanges.
      e. Secure membrane waterproofing to watertight entrance seal device in a permanent, watertight manner.

3. Heating, Ventilating, and Air Conditioning Equipment:
    a. Penetrate equipment in area established by manufacturer.
    b. Terminate conduit with flexible metal conduit at junction box or condulets attached to exterior surface of equipment prior to penetrating equipment.
    c. Seal penetration with silicone type sealant.
4. Corrosive-Sensitive Areas:
    a. Seal all conduit entering field panels containing electronic equipment.
    b. Seal all conduit entering equipment panel boards and field panels containing electronic equipment.
    c. Seal penetration with silicone type sealant.
5. Existing or Precast Wall (Underground): Core drill wall and install a watertight entrance seal device.
6. Non-waterproofed Wall or Floor (Underground, without Concrete Encasement):
    a. Provide Schedule 40 galvanized pipe sleeve, or watertight entrance seal device.
    b. Fill space between raceway and sleeve with an expandable plastic compound on each side.
7. Manholes and Pullboxes:
    a. Metallic Raceways: Provide insulated grounding bushings.
    b. Nonmetallic Raceways: Provide bell ends flush with wall.
    c. Install such that raceways enter as near as possible to one end of wall, unless otherwise shown.

3.06 SUPPORT

A. Support from structural members only, at intervals not exceeding NFPA 70 requirements, and in any case not exceeding 10 feet. Do not support from piping, pipe supports, or other raceways.

B. Multiple Adjacent Raceways: Provide ceiling trapeze. For trapeze-supported conduit, allow 40 percent extra space for future conduit.

C. Provide and attach wall brackets or strap hangers:
    1. Wood: Wood screws.
    2. Hollow Masonry Units: Toggle bolts.
    3. Concrete or Brick: Expansion shields, or threaded studs driven in by powder charge, with lock washers and nuts.
    4. Steelwork: Machine screws.

D. Nails or wooden plugs inserted in concrete or masonry for attaching raceway not permitted. Do not weld raceways or pipe straps to steel structures. Do not use wire in lieu of straps or hangers.

3.07 BENDS

A. Install concealed raceways with a minimum of bends in the shortest practical distance.

B. Make bends and offsets of longest practical radius.

C. Install with symmetrical bends or cast metal fittings.

D. Avoid field-made bends and offsets, but where necessary, make with acceptable hickey or bending machine. Do not heat metal raceways to facilitate bending.

E. Make bends in parallel or banked runs from same center or centerline with same radius so that bends are parallel.

F. Factory elbows may be installed in parallel or banked raceways if there is change in plane of run, and raceways are same size.

G. PVC Conduit:
   1. Bends 30-Degree and Larger: Provide factory-made elbows.
   2. 90-Degree Bends: Provide rigid steel elbows.
   3. Use manufacturer's recommended method for forming smaller bends.

H. Flexible Conduit: Do not make bends that exceed allowable conductor bending radius of cable to be installed or that significantly restricts conduit flexibility.

3.08 EXPANSION/DEFLECTION FITTINGS

A. Provide on all raceways at all structural expansion joints, and in long tangential runs.

B. Provide expansion/deflection joints for 50 degrees F maximum temperature variation.

C. Install in accordance with manufacturer's instructions.

3.09 PVC CONDUIT

A. Solvent Welding:
   1. Provide manufacturer recommended solvent; apply to all joints.
   2. Install such that joint is watertight.

B. Adapters:
   1. PVC to Metallic Fittings: PVC terminal type.
   2. PVC to Rigid Metal Conduit or IMC: PVC female adapter.

C. Belied-End Conduit: Bevel the un-belled end of the joint prior to joining.

3.10 PVC-COATED RIGID STEEL CONDUIT

A. Install in accordance with manufacturer's instructions.

B. Provide PVC boot to cover all exposed threading.

3.11 WIREWAYS

A. Install in accordance with manufacturer's instructions.

B. Locate with cover on accessible vertical face of wireway, unless otherwise shown.

3.12 TERMINATION AT ENCLOSURES

A. Cast Metal Enclosure: Provide manufacturer's pre-molded insulating sleeve inside metallic conduit terminating in threaded hubs.

B. Sheet Metal Boxes, Cabinets, and Enclosures:
   1. Rigid Galvanized Conduit:
      a. Provide one lock nut each on inside and outside of enclosure.
      b. Install grounding bushing.
      c. Provide bonding jumper from grounding bushing to equipment ground bus or ground pad; if neither ground bus nor pad exists, connect jumper to lag bolt attached to metal enclosure.
      d. Install insulated bushing on ends of conduit where grounding is not required.
      e. Provide insulated throat when conduit terminates in sheet metal boxes having threaded hubs.
   2. Flexible Metal Conduit: Provide two screw type, insulated, malleable iron connectors.
   3. Flexible, Nonmetallic Conduit: Provide nonmetallic, liquid-tight strain relief connectors.
   4. PVC-Coated Rigid Galvanized Steel Conduit: Provide PVC-coated, liquid-tight, metallic connector.
   5. PVC Schedule 40 Conduit: Provide PVC terminal adapter with lock nut.

C. Motor Control Center, Switchboard, Switchgear, and Free-Standing Enclosures: Terminate conduit entering bottom with grounding bushing; provide a grounding jumper extending to equipment ground bus or grounding pad.

3.13 UNDERGROUND RACEWAYS

A. This section applies to all underground conduit installations including underground installation on open field, under the slab, under the roadways, etc.

B. Grade: Maintain minimum grade of 4 inches in 100 feet, either from one manhole, handhole, or pull box to the next, or from a high point between them, depending on surface contour.

C. Cover: Maintain minimum 2-foot cover above conduit and concrete encasement, unless otherwise shown.

D. Make routing changes as necessary to avoid obstructions or conflicts.

E. Couplings: In multiple conduit runs, stagger so that couplings in adjacent runs are not in same transverse line.

F. Union type fittings not permitted.

G. Spacers:
   1. Provide preformed, nonmetallic spacers, designed for such purpose, to secure and separate parallel conduit runs in a trench or concrete encasement.
   2. Install at intervals not greater than that specified in NFPA 70 for support of the type conduit used, but in no case greater than 10 feet.

H. Support conduit so as to prevent bending or displacement during backfilling or concrete placement.

I. Installation with Other Piping Systems:
   1. Crossings: Maintain minimum 12-inch vertical separation.
   2. Parallel Runs: Maintain minimum 12-inch separation.
   3. Installation over valves or couplings not permitted.

J. Metallic Raceway Coating: At couplings and joints and along entire length, apply wraparound duct band with one-half tape width overlap to obtain two complete layers.

K. Backfill:
   1. Do not backfill until inspected by Engineer.

3.14 MANHOLES AND HANDHOLES

A. Excavate, shore, brace, backfill, and final grade back to original state.

B. Do not install until final raceway grading has been determined.

C. Install such that raceways enter at nearly right angles and as near as possible to one end of wall, unless otherwise shown.

D. Grounding: As specified in Section 16450, GROUNDING.

E. Identification: Field stamp covers with manhole or handhole number as shown. Stamped numbers to be 1-inch minimum height.

3.15 EMPTY RACEWAYS

A. Provide permanent, removable cap over each end.

B. Provide PVC plug with pull tab for underground raceways with end bells.

C. Provide nylon pull cord.

D. Identify, as specified in Paragraph IDENTIFICATION DEVICES, with waterproof tags attached to pull cord at each end, and at intermediate pull point.

3.16 IDENTIFICATION DEVICES

A. Raceway Tags:
   1. Identify origin and destination.
   2. Install at each terminus, near midpoint, and at minimum intervals of every 50 feet of exposed Raceway, whether in ceiling space or surface mounted.
   3. Provide nylon strap for attachment.

B. Warning Tape: Install approximately 12 inches above underground or concrete-encased raceways. Align parallel to, and within 12 inches of, centerline of runs.

C. Buried Raceway Markers:
   1. Install at grade to indicate direction of underground raceways.
   2. Install at all bends and at intervals not exceeding 100 feet in straight runs.
   3. Embed and secure to top of concrete base, sized 14 inches long, 6 inches wide, and 8 inches deep; top set flush with finished grade.

3.17 PROTECTION OF INSTALLED WORK

A. Protect products from effects of moisture, corrosion, and physical damage during construction.

B. Provide and maintain manufactured watertight and dust-tight seals over all conduit openings during construction.

C. Touch up painted conduit threads after assembly to cover nicks or scars.

D. Touch up damage to coating on PVC-coated conduit with patching compound approved by manufacturer.

END OF SECTION

SECTION 16120

CONDUCTORS

PART 1 GENERAL

1.01 REFERENCES

A. The following is a list of standards that may be referenced in this section:
   1. ASTM International (ASTM):
      a. A167 - Standard Specification for Stainless and Heat Resisting Chromium-Nickel-P1ated Steel Plate, Sheet, and Strip.
      b. B3 - Standard Specification for Soft or Annealed Copper Wire.
      c. B8 - Standard Specification for Concentric-Lay-Stranded Copper Conductors, Hard, Medium-Hard, or Soft.
      d. B263 - Standard Test Method for Determination of Cross- Sectional Area of Stranded Conductors.
   2. Insulated Cable Engineer's Association, Inc. (ICEA): T-29-250, Procedure for Conducting Vertical Cable Tray Flame Test with a Theoretical Heat Input of 210,000 Btu/hour.
   3. National Electrical Contractors Association, Inc. (NECA): 5055, Standard of Installation.
   4. National Electrical Manufacturers' Association (NEMA):
      a. WC 5 - Thermoplastic Insulated Wire and Cable for the Transmission and Distribution of Electrical Energy.
      b. WC 7 - Crosslinked-Thermosetting-Polyethylene-insulated Wire and Cable for the Transmission and Distribution of Electrical Energy.
      c. WC 8 - Ethylene-Propylene-Rubber Insulated Wire and Cable for the Transmission and Distribution of Electrical Energy.
      d. WC 55 - Instrumentation Cables and Thermocouple Wire.
   5. National Fire Protection Association (NFPA): 70, National Electrical Code (NEC).
   6. Underwriters Laboratories, Inc. (UL):
      a. 13 - Standard for Safety Power-Limited Circuit Cables.
      b. 44 - Standard for Safety Rubber-Insulated Wires and Cables.
      c. 62 - Standard for Safety Flexible Cord and Fixture Wire.
      d. 486A - Standard for Safety Wire Connector and Soldering Lugs for Use with Copper Conductors.
      e. 510 - Standard for Safety Insulating Tape.
      f. 854 - Standard for Safety Service-Entrance Cables.
      g. 910 - Standard for Safety Test Method for Fire and Smoke Characteristics of Electrical and Optical-Fiber Cables Used in Air Handling Spaces.
      h. 1277 - Standard for Safety Electrical Power and Control Tray Cables with Optional Optical-Fiber Members.
      i. 1581 - Standard for Safety Reference Standard for Electrical Wires, Cables, and Flexible Cords.

1.02 SUBMITTALS

A. Shop Drawings:
   1. Wire and cable descriptive product information.
   2. Wire and cable accessories descriptive product information.

B. Quality Control Submittals:
   1. Certified Factory Test Report for conductors 600 volts and below.
   2. Certified Factory Test Report per AEIC CS6, including AEIC qualification report for conductors above 600 volts.

1.03 UL COMPLIANCE

A. Materials manufactured within scope of Underwriters Laboratories shall conform to UL Standards and have an applied UL listing mark.

PART 2 PRODUCTS

2.01 CONDUCTORS 600 VOLTS AND BELOW

A. Conform to applicable requirements of NEMA WC 3, WC 5, and WC 7.

B. Conductor Type:
   1. 480V power circuits: stranded copper.
   2. 120-Volt power circuits, No. 10 AWG and smaller: stranded copper.
   3. All Other Circuits: Stranded copper.

C. Insulation: Type THHN/THWN for No. 6 AWG and smaller. XHHW for No.4 AWG and larger, or installations in wet locations.

D. Direct Burial and Aerial Conductors and Cables:
   1. Type USE/RHH/RHW insulation, UL t(54 listed, Type RHW-2/USE-2.
   2. Conform to physical and minimum thickness requirements of NEMA WC 3.

E. Flexible Cords and Cables:
   1. Type SOW-A50 with ethylene propylene rubber insulation in accordance with UL 62.
   2. Conform to physical and minimum thickness requirements of NEMA WC 8.

F. Cable Tray Conductors and Cables: Type TC.

2.02 600-VOLT RATED CABLE

A. General:
   1. Type: TC, meeting requirements of UL 1277, including Vertical Tray Flame Test at 20,000 Btu/hr, and NFPA 70, Article 340, or UL 13 Listed Power Limited Circuit Cable meeting requirements of NFPA 70, Article 725.
   2. Permanently and legibly marked with manufacturer's name, maximum working voltage for which cable was tested, type of cable, and UL listing mark.
   3. Suitable for installation in open air, in cable trays, or conduit.
   4. Minimum Temperature Rating: 90 degrees C dry locations, 75 degrees C wet locations.
   5. Overall Outer Jacket: PVC, flame-retardant, sunlight- and oil-resistant.

B. Wire and Connectors:
   1. Cable shall be rated for 600 volts and shall meet the requirements below:
   2. Conductors shall be stranded
   3. All wire shall be brought to the job in unbroken packages and shall bear the data of manufacturing; not older than 12 months.
   4. Type of wire shall be XHHW or THHN, rated 75 degrees C suitable for wet locations except where required otherwise by the drawings.
   5. No wire smaller than No. 12 gauge shall be used unless specifically indicated.
   6. Conductor metal shall be copper.
   7. All conductors shall be meg-ohm tested after installation and insulation must be in compliance with the Insulated Power Cable Engineers Association Minimum Values of Insulation Resistance.

C. Type I-Multiconductor Control Cable:
   1. Conductors:
      a. No. 14 AWG, seven-strand copper.
      b. Insulation: 15-mil PVC with 4-mil nylon.
      c. UL 1581 listed as Type THHN/THWN rated VW-I.
      d. Conductor group bound with spiral wrap of barrier tape.
      e. Color Code: In accordance with NEMA WC 5, Method 1, Sequence K-2.
   2. Cable: Passes the ICEA T-29-520 210,000 Btu/hr Vertical Tray Flame Test.
   3. Cable Sizes:

No. of Conductors	Max. Outside Diameter (inches)	Jacket Thickness (mils)
3	0.41	45
5	0.48	45
7	0.52	45
12	0.72	60
19	00.83	60
25	1.00	60
37	1.15	80

   4. Manufacturers:
      a. Okonite Co.
      b. General Cable.
      c. Southwire.

D. Type 2-Multiconductor Power Cable:
   1. Conductors:
      a. Class B stranded, coated copper.
      b. Insulation: Chemically crosslinked ethylene-propylene with CPE jacket.
      c. UL 1581 listed as Type EPR, rated VW-1.
      d. Color Code: Conductors, size No. 8 AWG and smaller, colored conductors, NEMA WC74 Method 1, color 5 per Article POWER CONDUCTOR COLOR CODING. Conductors, size No. 6 AWG and larger, NEMA WC5, Method 4.
   2. Cable shall pass the ICEA T-29-520 210,000 Btu/hr Vertical Tray Flame Test.

3. Cable Sizes:

Conductor Size	Minimum Ground Wire Size	No. of Conductors	Max.Outside Diameter (Inches)	Nominal Jacket Thickness (Mils)
12	12	2	0.42	45
		3	0.45	45
		4	0.49	45
10	10	2	0.54	60
		3	0.58	60
		4	0.63	60
8	10	3	0.66	60
		4	0.72	
6	8	3	0.74	60
		4	0.81	
4	6	3	0.88	60
		4	0.97	80
2	6	3	1.01	80
		4	1.11	
1/0	6	3	1.22	80
		4	1.35	
2/0	4	3	1.32	80
		4	1.46	
4/0	4	3	1.56	80
		4	1.78	

4. Manufacturers:
   a. Okonite Co.
   b. General Cable.
   c. Southwire.

E. Type B-No. 16 AWG, Twisted, Shielded Pair, Instrumentation Cable: Single pair, designed for noise rejection for process control, computer, or data log applications meeting NEMA WC 55 requirements. Insulation shall be rated for 600V, 300V insulation is not acceptable.
   1. Outer Jacket: 45-mil nominal thickness.
   2. Individual Pair Shield: 1.35-mil, double-faced aluminum/synthetic polymer overlapped to provide 100 percent coverage.
   3. Dimension: 0.31-inch nominal OD.
   4. Conductors:
      a. Bare soft annealed copper, Class B, seven-strand concentric, meeting requirements of ASTM B8
      b. 20 AWG, seven-strand tinned copper drain wire.
      c. Insulation: 15-mil nominal PVC.
      d. Jacket: 4-mil nominal nylon.
      e. Color Code: Pair conductors black and red.

5. Manufacturers:
    a. Okonite Co.
    b. Alpha Wire Corp.
    c. General Cable.
6. The following test shall be performed on instrumentation and control system cables. All tests shall be end-to-end test of installed cables with the ends supported in free air, not adjacent to any ground object. All test data shall be recorded on forms acceptable to the Engineer. Complete records of all tests shall be made and delivered to the Engineer.
    a. Continuity tests shall be performed by measuring wire/shield loop resistances of signal cable as the wires, taken one at a time, are shorted to the channel shield. No loop resistance measurement shall carry by more than +2 ohms from the calculated average loop resistance valve.
    b. Insulation resistance tests shall be performed by using a 500 volt megohmmeter to measure the insulation resistance between each channel wire and channel shield, between individual channel shields in a multi-channel cable, between each individual channel and the overall cable shield in multi-channel cable, between each wire and ground, and between each shield and ground. Values of resistance less than 10 megohms shall be unacceptable.

F. Type B1-No. 16 AWG, Twisted, Shielded Triad Instrumentation Cable: Single triad, designed for noise rejection for process control, computer, or data log applications meeting NEMA WC 55 requirements. Insulation shall be rated for 600V, 300V insulation is not acceptable.
1. Outer Jacket: 45-mil nominal.
2. Individual Pair Shield: 1.35-mil, double-faced aluminum/synthetic polymer, overlapped to provide 100 percent coverage.
3. Dimension: 0.32-inch nominal OD.
4. Conductors:
    a. Bare soft annealed copper, Class B, seven-strand concentric, meeting requirements of ASTM B8.
    b. 20 AWG, seven-strand, tinned copper drain wire.
    c. Insulation: 15-mil nominal PVC.
    d. Jacket: 4-mil nylon.
    e. Color Code: Triad conductors black, red, and blue.
5. Manufacturers:
    a. Okonite Co.
    b. Alpha Wire Corp.
    c. General Cable.

G. Type B2-No. 18 AWG, Multi-Twisted, Shielded Pairs with a Common, Overall Shield Instrumentation Cable: Designed for use as instrumentation, process control, and computer cable, meeting NEMA WC 55 requirements. Insulation shall be rated for 600V, 300V insulation is not acceptable.
1. Conductors:
    a. Bare soft annealed copper, Class B, seven-strand concentric, in accordance with ASTM B8.
    b. Tinned copper drain wires.
    c. Pair drain wire size AWG 20, group drain wire size AWG 18.
    d. Insulation: 15-mil PVC.
    e. Jacket: 4-mil nylon.

f. Color Code: Pair conductors black and red with red conductor numerically printed for group identification.
g. Individual Pair Shield: 1.35-mil, double-faced aluminum/synthetic polymer.

2. Cable Shield: 2.35-mil, double-faced aluminum/synthetic polymer, overlapped for 100 percent coverage.
3. Cable Sizes:

Number of Pairs	Maximum Outside Diameter (inches)	Nominal Jacket Thickness (mils)
4	0.50	45
8	0.68	60
12	0.82	60
16	0.95	80
24	1.16	80
36	1.33	80
50	1.56	80

4. Manufacturers:
   a. Okonite Co.
   b. Alpha Wire Corp.
   c. General Cable.
   d. Belden.

H. Type B3-No. 18 AWG, Multi-twisted Pairs with a Common Overall Shield Instrumentation Cable: Designed for use as instrumentation, process control, and computer cable meeting NEMA WC 55. Insulation shall be rated for 600V, 300V insulation is not acceptable.
1. Conductors:
   a. Bare soft annealed copper, Class B, seven-strand concentric, in accordance with ASTM B8.
   b. Tinned copper drain wire size 18 AWG.
   c. Insulation: 15-mil nominal PVC.
   d. Jacket: 4-mil nylon.
   e. Color Code: Pair conductors black and red, with red conductor numerically printed for group identification.
2. Cable Shield: 2.35-mil, double-faced aluminum/synthetic polymer, overlapped for 100 percent coverage.
3. Cable Sizes:

Number Of Pairs	Maximum Outside Diameter (inches)	Nominal Jacket Thickness (mils)
4	0.46	45
8	0.63	60
12	0.75	60
16	0.83	60
24	1.06	80
36	1.21	80
50	1.42	80

4. Manufacturers:
    a. Okonite Co.
    b. Alpha Wire Corp.
    c. Belden.

I. Variable Frequency Drive (VFD) Output Power Cable:
1. Section applies to power cables routed between the output of VFD's and motor terminals.
2. Cable shall be rated for 600 volts type MC and shall meet the requirements below:
    a. Conductors shall be stranded copper.
    b. All wire shall be brought to the job in unbroken packages and shall bear the data of manufacturing; not older than 12 months.
    c. Type of wire shall be XHHW or RHW rated 75 degrees C suitable for wet locations, or XHHW-2 or RHW-2 rated at 90 degrees C suitable for wet locations.
    d. No wire smaller than No. 12 gauge shall be used unless specifically indicated.
    e. Cable construction shall consist of three insulated current-carrying phase conductors and three bare ground conductors, symmetrically placed between the phase conductors, and twisted beneath a continuous aluminum armor and overall polymeric jacket.
    f. Armor must be continuous corrugated aluminum armor (CCA) manufacture. Aluminum interlocked armor (AIA) construction is not acceptable.
3. Each ground conductor size (circular mil area) shall be one-third (1/3) of the NEC required size (circular mil area) for a single ground conductor. If one third of the required circular mil area does not correspond to a standard size (circular mil area) of construction, the next largest size of standard construction shall be us All conductors shall be megger tested after installation and insulation must be in compliance with the Insulated Power Cable Engineers Association Minimum Values of Insulation Resistance.
4. Manufacturers:
    a. Southwire – ARMOR-X.
    b. General Cable.
    c. Approved Equal.

J. Ethernet Cat. 6e UTP Cable (Copper):
1. Section applies to all Ethernet Cable (Copper) except for Fiber Optic cable.
2. Conductor Physical Characteristics: 4 twisted pairs (8 conductors), 23 AWG solid bare Copper with Polyolefin Insulation. Overall Nominal Diameter: 0.235 inch. Operating Temperature Range: -20'C to +75'C. Model Number – 7881A, Belden Inc.
3. NEC/UL specification CMR, UL444, UL verified category 6.
4. Manufacturer:
    a. Belden Inc.
    b. Or equal.

2.03 GROUNDING CONDUCTORS

A. Equipment: Stranded copper with green, Type USE/RHH/RHW-XLPE or THHN/THWN, insulation.

B. Direct Buried: Bare stranded copper.

2.04 ACCESSORIES FOR CONDUCTORS 600 VOLTS AND BELOW

A. Tape:
   1. General Purpose, Flame Retardant: 7-mil, vinyl plastic, Scotch Brand 33, rated for 90 degrees C minimum, meeting requirements of UL 510.
   2. Flame Retardant, Cold and Weather Resistant: 8.5-mil, vinyl plastic, Scotch Brand 88.
   3. Arcs and Fireproofing:
      a. 30-mil, elastomer
      b. Manufacturers and Products:
         1) Scotch; Brand 77, with Scotch Brand 69 glass cloth tape binder.
         2) Plymount; Plyarc 30, with Plymount Plyglas glass cloth tape binder.

B. Identification Devices:
   1. Sleeve: Permanent, PVC, yellow or white, with legible machine-printed black markings.
   2. Marker Plate: Nylon, with legible designations permanently hot stamped on plate.
   3. Grounding Conductor: Permanent green heat-shrink sleeve, 2-inch minimum.

C. Connectors and Terminations:
   1. Nylon, Self-Insulated Crimp Connectors:
      a. Manufacturers and Products:
         1) Thomas & Betts; Sta-Kon.
         2) Burndy; Insulink.
         3) ILSCO.
   2. Nylon, Self-Insulated, Crimp Locking-Fork, Torque-Type Terminator:
      a. Manufacturers and Products:
         1) Thomas & Betts; Sta-Kon.
         2) Burndy; Insulink.
         3) ILSCO.

D. Cable Lugs:
   1. In accordance with NEMA CC I.
   2. Rated 600 volts of same material as conductor metal.
   3. Insulated, Locking-Fork, Compression Lugs:
      a. Manufacturers and Products:
         1) Thomas & Betts; Sta-Kon.
         2) ILSCO; ILSCONS.
   4. Un-insulated Crimp Connectors and Terminators:
      a. Manufacturers and Products:
         1) Square D; Versitide.
         2) Thomas & Betts; Color-Keyed.
         3) ILSCO.
   5. Un-insulated, Bolted, Two-Way Connectors and Terminators:
      a. Manufacturers and Products:
         1) Thomas & Betts; Locktite.
         2) Burndy; Quiklug.
         3) ILSCO.

E. Cable Ties: Nylon, adjustable, self-locking, and reusable.
   1. Manufacturers and Product: Thomas & Betts; TY-RAP.

F. Heat Shrinkable Insulation: Thermally stabilized, crosslinked polyofin.
   1. Manufacturers and Product: Thomas & Betts; SHRINK-KON.

2.05 PULLING COMPOUND

A. Nontoxic, non-corrosive, noncombustible, nonflammable, wax-based lubricant; UL listed.

B. Suitable for rubber, neoprene, PVC, polyethylene, hypalon, CPE, and lead-covered wire and cable.

C. Suitable for zinc-coated steel, aluminum, PVC, bituminized fiber, and fiberglass raceways.

D. Manufacturers and Products:
   1. Ideal Co.; Yellow 77.
   2. Polywater, Inc.
   3. Cable Grip Co.

2.06 WARNING TAPE

A. As specified in Section 16110, RACEWAYS.

2.07 FIBER OPTIC DATA CABLE AND ACCESSORIES

A. The fiber optic cable shall be a three-fiber outdoor type cable suitable for installation and pulling through a duct bank. For simple point to point fiber optic link, the cable shall be six fiber 62.5/125 microns as manufactured by Belden Wire and Cable Company, Catalog No. 225716, or approved equal.

B. Furnish compatible connectors and breakout kits with the cable. Furnish sufficient connectors and breakout kits to meet the project requirements and install connectors on all fiber optic cable. Use Contract Drawings as a guide in determining lengths, taking into account actual field conditions. Use the fiber optic connectors, termination kits, and cable test kits per cable manufacturer that is compatible with specified data concentrators.

2.08 SOURCE QUALITY CONTROL

A. Conductors 600-Volts and Below: Test in accordance with UL 44 and 854 Standards.

2.09 ACCESS CONTROL CABLES

A. 2C/ 18 AWG shielded communication plenum cable. Match model with existing.

B. 6C/ 18 AWG shielded communication plenum cable. Match model with existing.

PART 3 EXECUTION

3.01 GENERAL

A. Conductor installation to be in accordance with NECA 5055.

B. Conductor and cable sizing shown is based on copper conductors, unless noted otherwise.

C. Do not exceed cable manufacturer's recommendations for maximum pulling tensions and minimum bending radii.

D. Tighten screws and terminal bolts in accordance with UL 486A for copper conductors.

E. Cable Lugs: Provide with correct number of holes, bolt size, and center-to-center spacing as required by equipment terminals.

F. Bundling: Where single conductors and cables in pullboxes, and other indicated locations, are not wrapped together by some other means, bundle conductors from each conduit throughout their exposed length with cable ties placed at intervals not exceeding 18 inches on center.

G. Ream, remove burrs, and clear interior of installed conduit before pulling wires or cables.

H. Concrete-Encased Raceway Installation: Prior to installation of conductors, pull through each raceway a mandrel approximately 1/4-inch smaller than raceway inside diameter.

I. Cable Tray Installation:
   1. Install wire and cable parallel and straight in tray.
   2. Bundle, in groups, all wire and cable of same voltage having a common routing and destination; use cable ties, at maximum intervals of 8 feet.
   3. Clamp cable bundles prior to making end termination connections.
   4. Separate cables of different voltage rating in same cable tray with barriers.
   5. Fasten wires, cables, and bundles to tray with nylon cable straps at the following maximum intervals:
      a. Horizontal Runs: 20 feet.
      b. Vertical Runs: 5 feet.

3.02 POWER CONDUCTOR COLOR CODING

A. Conductors 600 Volts and Below:
   1. No. 6 AWG and Larger: Apply general purpose, flame retardant tape at each end, and at accessible locations wrapped at least six full overlapping turns, covering an area 1-1/2 to 2 inches wide.
   2. No. 8 AWG and Smaller: Provide colored conductors.

3. Colors:

System	Conductor	Color
All Systems	Equipment Grounding	Green
240/120 Volts Single-Phase, Three-Wire	Grounded Neutral One Hot Leg Other Hot Leg	White Black Red
208Y/120 Volts Three-Phase, Four-Wire	Grounded Neutral Phase A Phase B Phase C	White Black Red Blue
240/120 Volts Three-Phase, Four-Wire Delta, Center Tap Ground on Single-Phase	Grounded Neutral Phase A High (wild) Leg Phase C	White Black Orange Blue
480Y/277 Volts Three-Phase, Four-Wire	Grounded Neutral Phase A Phase B Phase C	Gray Brown Orange Yellow
Note: Phase A, B, C implies direction of positive phase rotation		

4. Tracer: Outer covering of white with an identifiable colored strip other than green in accordance with NFPA 70.

3.03 CIRCUIT IDENTIFICATION

A. Circuits Appearing in Circuit Schedules: identify power, instrumentation, and control conductor circuits, using circuit schedule designations, at each termination and in accessible locations such as manholes, hand holes, panels, switchboards, motor control centers, pull boxes, and terminal boxes.

B. Circuits Not Appearing in Circuit Schedules:
   1. Assign circuit name based on device or equipment at load end of circuit.
   2. Where this would result in same name being assigned to more than one circuit, add number or letter to each otherwise identical circuit name to make it unique.

C. Method:
   1. Conductors No. 3 AWG and Smaller: Identify with sleeves.
   2. Cables, and Conductors No. 2 AWG and Larger:
      a. Identify with marker plates.
      b. Attach marker plates with nylon tie cord.
   3. Taped-on markers or tags relying on adhesives not permitted.

3.04 CONDUCTORS 600 VOLTS AND BELOW

A. Install 10 AWG or 12 AWG conductors for branch circuit power wiring.

B. Connections and Terminations:
   1. Install wire nuts only on solid conductors.
   2. Install nylon self-insulated crimp connectors and terminators for instrumentation, control, and power circuit conductors No. 6 AWG and smaller.
   3. Install un-insulated crimp connectors and terminators for instrumentation, control, and power circuit conductors No. 4 AWG through No. 2/0 AWG.
   4. Install un-insulated, bolted, two-way connectors and terminators for power circuit conductors No. 4/0 AWG and larger.
   5. Install un-insulated bolted, two-way connectors for motor circuit conductors No. 12 and larger.
   6. Tape insulates all un-insulated connections.
   7. Place no more than one conductor in any single-barrel pressure connection.
   8. Install crimp connectors with tools approved by connector manufacturer.
   9. Install terminals and connectors acceptable for type of material used.
   10. Compression Lugs
      a. Attach with a tool specifically designed for purpose.
      b. Tool shall provide complete controlled crimp and shall not release until crimp is complete.
      c. Do not use plier-type crimpers.

C. Do not use soldered mechanical joints.

D. Splices and Terminations:
   1. Indoors: Use general purpose, flame retardant tape.
   2. Outdoors: Use flame retardant, cold- and weather-resistant tape.

E. Cap spare conductors and conductors with UL listed end caps.

F. Cabinets, Panels, and Motor Control Centers:
   1. Remove surplus wire, bridle and secure.
   2. Where conductors pass through openings or over edges in sheet metal, remove bums, chamfer edges, and install bushings and protective strips of insulating material to protect the conductors.

G. Control and Instrumentation Wiring:
   1. Where terminals provided will accept such lugs, terminate control and instrumentation wiring, except solid thermocouple leads, with insulated, locking-fork compression lugs.
   2. Terminate with methods consistent with terminals provided, and in accordance with terminal manufacturer's instructions.
   3. Locate splices in readily accessible cabinets or junction boxes using terminal strips.
   4. Cable Protection:
      a. Under Infinite Access Floors: May be installed without bundling.
      b. All Other Areas: Install individual wires, pairs, or triads in flex conduit under the floor or grouped into bundles at least 1/2-inch in diameter.
      c. Maintain integrity of shielding of instrumentation cables.
      d. Ensure grounds do not occur because of damage to jacket over the shield.

H. Extra Conductor Length: For conductors to be connected by others, install minimum 6 feet of extra conductor in freestanding panels and minimum 2 feet in other assemblies.

I. Variable Frequency Drive (VFD) Output Power Cable:
   1. Install cables in raceway.
   2. Terminate the three ground conductors together at the motor and at the ground bus of the VFD.
   3. Terminate aluminum armor at motor and at VFD. At motor, terminate shield with cable manufacturer recommended termination kit. Termination shall be to the motor junction box. At the VFD, terminate armor to the inverter drive frame. The termination kit must provide a 360-degree connection of the armor to frame and motor junction box.
   4. Cable armor and ground conductors shall be made continuous through disconnects or splice boxes where un-grounded conductors are terminated on a terminal block or cable lug. Use manufacturer recommended shield termination kits and connect pigtails together. The cable shield shall not be connected to the disconnect switch or box enclosure.

3.05 CONDUCTORS ABOVE 600 VOLTS

A. Do not splice unless specifically indicated or approved by the Engineer.

B. Make joints and terminations with splice and termination kits, in accordance with kit manufacturer's instructions.

C. Install splices or terminations as continuous operation in accessible locations under clean, dry conditions.

D. Single Conductor Cable Terminations: Provide heat shrinkable stress control and outer non-tracking insulation tubing, high relative permittivity stress relief mastic for insulation shield cutback treatment, and a heat-activated sealant for environmental sealing, plus a ground braid and clamp.

E. Install terminals or connectors acceptable for type of conductor material used.

F. Provide outdoor rain skirts for all riser pole and outdoor switchgear terminations.

G. Provide shield termination and grounding for all terminations.

H. Provide necessary mounting hardware, covers, and connectors.

I. Where elbow connectors are specified, install in accordance with manufacturer's instructions.

J. Connections and Terminations:
   1. Install un-insulated crimp connectors and terminators for power circuit conductors No. 4 AWG through No. 2/0 AWG.
   2. Install un-insulated, bolted, two-way connectors and terminators for power circuit conductors No. 4/0 AWG and larger.
   3. Install un-insulated, bolted, two-way connectors for motor circuit conductors No. 12 and larger.

4. Insulate bus connections with heat shrinking tubing, tape, and sheets.
5. Make all bus connections removable and reusable in accordance with manufacturer’s instructions.

K. Give 2 working days' notice to Engineer prior to making splices or terminations.

3.06 CONDUCTOR ARC AND FIREPROOFING

A. Install arc and fireproofing, tape on 600-volt single conductors and cables except those rated Type TC in manholes, hand holes, vaults, cable trays, and other indicated locations.

B. Install arc and fireproofing tape on 25 kV cables throughout their entire exposed length in manholes, hand holes, vaults, cable trays, and other indicated locations.

C. Wrap conductors of same circuit entering from separate conduit together as a single cable.

D. Follow tape manufacturer's installation instructions.

E. Secure tape at intervals of 5 feet with bands of tape binder. Each tape band shall consist of a minimum of two wraps directly over each other.

3.07 UNDERGROUND DIRECT BURIAL CABLE

A. Install in trench as required.

B. Warning Tape: Install approximately 12 inches above cable, aligned parallel to, and within 12 inches of centerline of the run.

3.08 FIELD QUALTTY CONTROL

A. In accordance Section 16950, ELECTRICAL TESTING.

END OF SECTION

SECTION 16450

GROUNDING

PART 1 GENERAL

1.01 SCOPE

A. Provide and install grounding system as shown on drawings and as specifies herein complete in place.

1.02 REFERENCES

A. The following is a list of standards that may be referenced in this section:
   1. American National Standards Institute (ANSI): C2 - National Electrical Safety Code (NESC).
   2. National Fire Protection Association (NFPA): 70 - National Electrical Code (NEC).

B. Submittals
   1. Shop Drawings:
      a. Product Data:
         1) Exothermic weld connectors.
         2) Mechanical connectors.
         3) Compression connectors.

C. UL Compliance
   1. Materials manufactured within scope of Underwriters Laboratories shall conform to UL Standards and have an applied UL listing mark.

PART 2 PART 2 PRODUCTS

2.01 GROUND ROD

A. Material: Copper clad.

B. Diameter: Minimum 5/8 inch.

C. Length: 20 feet.

2.02 GROUND CONDUCTORS

A. As specified in Section 16120, CONDUCTORS.

2.03 CONNECTORS

A. Exothermic Weld Type:
   1. Outdoor Weld: Suitable for exposure to elements or direct burial.
   2. Indoor Weld: Use low-smoke, low-emission process.

3. Manufacturers:
    a. Erico Products, Inc.
    b. Cadweld and Cadweld Exolon.
    c. Thermoweld.

B. Compression Type:
1. Compress deforming type; wrought copper extrusion material.
2. Single indentation for conductors 6 AWG and smaller.
3. Double indentation with extended barrel for conductors 4 AWG and larger.
4. Barrels pre-filled with oxide inhibiting and anti-seizing compound and sealed.
5. Manufacturers:
    a. Burndy Corp.
    b. Thomas and Betts Co.
    c. Ilso Corp.

C. Mechanical Type: Split-bolt, saddle, or cone screw type; copper alloy material.
1. Manufacturers:
    a. Burndy Corp.
    b. Thomas and Betts Co.

2.04 GROUNDING WELLS

A. Ground rod box complete with cast iron riser ring and traffic cover marked GROUND ROD.

B. Manufacturers:
1. Christy Co.; No. G5.
2. Lightning and Grounding Systems, Inc.; I-R Series.

PART 3 EXECUTION

3.01 GENERAL

A. Grounding shall comply with NFPA 70 and ANSI C2.

B. Ground electrical service neutral at service entrance equipment to supplementary grounding electrodes.

C. Ground each separately derived system neutral to nearest effectively grounded building structural steel member or separate grounding electrode.

D. Bond together system neutrals, service equipment enclosures, exposed non-current-carrying metal parts of electrical equipment, metal raceways, ground conductor in raceways and cables, receptacle ground connections, and metal piping systems.

E. Shielded Power Cables: Ground shields at each splice or termination in accordance with recommendations of splice or termination manufacturer.

F. Shielded Control Cables:
   1. Ground shield to ground bus at power supply for analog signal.
   2. Expose shield minimum I inch at termination to field instrument and apply heat shrink tube.
   3. Do not ground control cable shield at more than one point.

3.02 WIRE CONNECTIONS

A. Ground Conductors: Install in conduit containing power conductors and control circuits above 50 volts.

B. Nonmetallic Raceways and Flexible Tubing: Install an equipment-grounding conductor connected at both ends to non-current carrying grounding bus.

C. Connect ground conductors to raceway grounding bushings.

D. Extend and connect ground conductors to ground bus in all equipment containing a ground bus.

E. Connect enclosure of equipment containing ground bus to that bus.

F. Bolt connections to equipment ground bus.

G. Bond grounding conductors to metallic enclosures at each end, and to intermediate metallic enclosures.

H. Junction Boxes: Furnish materials and connect to equipment grounding system with grounding clips mounted directly on box, or with 3/8-inch machine screws.

3.03 MOTOR GROUNDING

A. Extend equipment ground bus via grounding conductor installed in motor feeder raceway; connect to motor frame.

B. Nonmetallic Raceways and Flexible Tubing: Install an equipment-grounding conductor connected at both ends to non-current carrying grounding bus.

C. Motors Less Than 10 hp: Furnish compression, spade-type terminal connected to conduit box mounting screw.

D. Motors 10 hp and above: Tap motor frame or equipment housing; furnish compression, one-hole, lug type terminal connected with minimum 5/16-inch brass threaded stud with bolt and washer.

E. Circuits 20 Amps or Above: Tap motor frame or equipment housing; install solderless terminal with minimum 5/16-inch diameter bolt.

3.04 GROUND RODS

A. Install full length with conductor connection at upper end.

B. Install with connection point below finished grade, unless otherwise shown.

3.05 GROUNDING WELLS

A. Install inside buildings, asphalt, and paved areas.

B. Install riser ring and cover flush with surface.

C. Place 9 inches crushed rock in bottom of each well.

3.06 CONNECTIONS

A. General:
   1. Above grade Connections: Use exothermic weld, mechanical, or compression-type connectors.
   2. Below grade Connections: Install exothermic weld type connectors.
   3. Remove paint, dirt, or other surface coverings at connection points to allow good metal-to-metal contact.
   4. Notify Engineer before backfilling ground connections.

B. Exothermic Weld Type:
   1. Wire brush or file contact point to bare metal surface.
   2. Use welding cartridges and molds in accordance with manufacturer's recommendations.
   3. Avoid using badly worn molds.
   4. Mold to be completely filled with metal when making welds.
   5. After completed welds have cooled, brush slag from weld area and thoroughly clean joint.

C. Compression Type:
   1. Install in accordance with connector manufacturer's recommendations.
   2. Install connectors of proper size for grounding conductors and ground rods specified.
   3. Install using connector manufacturer's compression tool having proper sized dies and proof of calibration within the last 12 months.

D. Mechanical Type:
   1. Apply homogeneous blend of colloidal copper and rust and corrosion inhibitor before making connection.
   2. Install in accordance with connector manufacturer's recommendations.
   3. Do not conceal mechanical connections.

3.07 METAL STRUCTURE GROUNDING

A. Ground metal sheathing and exposed metal vertical structural elements to grounding system.

B. Bond electrical equipment supported by metal platforms to the platforms.

C. Provide electrical contact between metal frames and railings supporting pushbutton stations, receptacles, and instrument cabinets, and raceways carrying circuits to these devices.

3.08 MANHOLE AND HANDHOLE GROUNDING

A. Install one ground rod inside each.

B. Ground Rod Floor Protrusion: 4 to 6 inches above floor.

C. Make connections of grounding conductors fully visible and accessible.

D. Connect all non-current carrying metal parts, and any metallic raceway grounding bushings to ground rod with No. 6 AWG copper conductor.

3.09 TRANSFORMER GROUNDING

A. Bond neutrals of transformers within buildings to system ground network, and to any additional indicated grounding electrodes.

B. Bond neutrals of substation transformers to substation grounding grid and system grounding network.

C. Bond neutrals of pad-mounted transformers to four locally driven ground rods and buried ground wire encircling transformer and system ground network.

3.10 SURGE PROTECTION EQUIPMENT GROUNDING

A. Connect surge arrestor ground terminals to equipment ground bus.

3.11 INSTRUMENT GROUND - SURGE SUPPRESSION

A. Connect all instrument surge protection with #6 insulated copper groundwire (in conduit where above grade) to closest plant ground system.

3.12 BONDING

A. Bond to Main Conductor System:
   1. All roof mounted ventilators, fans, air handlers, masts, flues, cooling towers, handrails, and other sizeable metal objects.
   2. Roof flashing, gravel stops, insulation vents, ridge vents, roof drains, soil pipe vents, and other small metal objects if located within 6 feet of main conductors or another grounded object.
   3. Provide air terminals as required.
   4. Bond steel columns or major framing members to grounding system per National Electrical Code.
   5. Bond each main down conductor to grounding system.
   6. All conduits terminations in panels shall be grounded using appropriate ground bushing and conductor to nearest ground point.

3.13 GROUNDING SYSTEM

A. Grounding Conductor:
   1. Completely encircle building structure.
   2. Bury minimum 30” below finished grade.
   3. Minimum 2 feet distance from foundation walls.
   4. Interconnect ground rods by direct-buried copper cables.

5. Connections:
    a. Install ground cables continuous between connections.
    b. Exothermic welded connections to ground rods, cable trays, structural steel, handrails, and buried and non-accessible connections.
    c. Provide bolted clamp type mechanical connectors for all exposed secondary connections.
    d. Use bolded offset parapet bases or through-roof concealed base assemblies for air terminal connections.
    e. Provide interconnections with electrical and telephone systems and all underground water and metal pipes.
    f. Provide electric service arrestor ground wire to building water main.

3.14 FIELD QUALITY CONTROL

A. As specified in Section 16950, ELECTRICAL TESTING.

END OF SECTION

SECTION 16670

LIGHTNING PROTECTION SYSTEM

PART 1 GENERAL

1.01 REFERENCES

A. The following is a list of standards which may be referenced in this section:
   1. Lightning Protection Institute (LPI): 175, Installation Standard.
   2. National Fire Protection Association (NFPA): 780, Lightning Protection Code.
   3. Underwriters Laboratories, Inc. (UL):
      a. 96 - Standard for Safety Lightning Protection Components.
      b. 96A - Standard for Safety Installation Requirements for Lightning Protection Systems.

1.02 DESIGN REQUIREMENTS

A. Provide lightning protection system design for all of the following facilities:
   1. Headwork Structure.

B. The work includes, but is not limited to, furnishing and installing air terminals, grounding conductors, connectors, fasteners, ground rods, and other materials necessary for a complete protective system.

C. Lightning protection system design to comply with all applicable provisions of LPI 175 and 176, UL 96 and 96A, and NFPA 780.

1.03 SUBMITTALS

A. Shop Drawings:
   1. Reproducible Mylar Drawings.
   2. Lightning protection system layout.
   3. Component locations.
   4. Detailed plans.
   5. Down conductor.
   6. Connecting conductor.
   7. Bond strap.
   8. Air terminals.
   9. Fittings.
   10. Connectors.
   11. Ground rods.

B. Quality Control Submittals: Field test report.

C. Contract Closeout Submittals: Submit to Owner:
   1. Ground Witness Certification-Form LPI-175A.
   2. Post-Installation System Certification.

1.04 QUALITY ASSURANCE

A. Designer: Lightning protection system design shall be prepared by an LPI-certified designer or recognized lightning protection manufacturer.

B. Manufacturer: All system components shall be the product of a single manufacturer regularly engaged in the manufacturing of lightning protection components in accordance with LPI 176 and UL 96.

C. Installer: Lightning protection system shall be installed under the direct supervision of an LPI 175 Certified Master Installer.

D. Inspector: Final installation and grounding connection inspection of the System shall be performed by the Owner representative or agent in accordance with LPI 177.

E. UL Compliance: Materials manufactured within scope of Underwriters Laboratories, Inc. shall conform to UL Standards and have an applied UL listing mark.

PART 2 PRODUCTS

2.01 MANUFACTURERS

A. Thompson Lightning.

B. IPC Protection.

C. AC Lightning Security.

D. Lightning & Grounding Systems, Inc.

E. Or approved equal.

2.02 GENERAL

A. Complete system shall bear UL 96 Master Label C, if applicable.

B. System Material: Copper or high copper content, heavy-duty bronze castings, unless otherwise specified.

C. All material shall comply in weight, size, and composition for the class of structure to be protected as established by UL 96 and 96A.

2.03 AIR TERMINAL

A. Material: Solid copper rods, with tapered points.

B. Length: Sufficient to extend minimum 10 inches above object being protected.

C. UL 96 Label B applied to each terminal.

2.04 CONDUCTORS

A. Copper Cable: Bare medium stranded, having 97.5 percent minimum conductivity.

B. Main Down Conductor: Per UL and NFPA criteria and based on building height.

C. Connecting Conductor: Secondary size per UL and NFPA criteria.

D. Bonding Conductor: Flexible strap, minimum 3/4-inch wide by 1/8-inch thick.

E. All main down and connecting conductors shall bear the UL 96 Label A, applied every 10 feet.

2.05 CABLE FASTENER AND ACCESSORIES

A. Capable of withstanding minimum pull of 100 pounds.

2.06 FITTINGS

A. Heavy-duty Class II bolt pressure type.

B. Bolts, Screws, and Related Hardware: Stainless steel.

2.07 GROUND RODS

A. Material: Copper clad steel – 5/8” x 20’ long UL 469 listed.

2.08 GROUNDING CONNECTIONS

A. Welds: Exothermic process.

B. Fasteners: Bolted clamp type, corrosion-resistant copper alloy.

C. Hardware: Stainless Steel.

2.09 CABLE CONNECTIONS AND SPLICERS

A. Welds: Exothermic process (underground).

B. Fasteners: Bolted clamp type, corrosion-resistant copper alloy (above grade).

C. Through-Roof Connectors: Straight or right angle with lead flashing washer and other appurtenances to match existing roofing system.

2.10 CONDUIT

A. Schedule 40 PVC, as specified in Section 16110, RACEWAYS.

PART 3 EXECUTION

3.01 GENERAL

A. Workmanship to comply with all applicable provisions of LPI 175, UL 96 and 96A, and NFPA 780.

B. Installation of bare copper materials on aluminum surfaces will not be permitted.

C. Provide waterproof seal of all roof penetrations.

D. Install system in inconspicuous manner so that components blend with building aesthetics.

3.02 EXAMINATION

A. Verify conditions prior to installation. Actual conditions may require adjustments in air terminal and ground rod locations.

3.03 AIR TERMINALS

A. Supports: Brackets or braces.

B. Parapet Bracket Attachment: Lag or expansion bolts.

C. Secure base to roof surface with adhesive or pitch compatible with roofing bond.

D. Provide terminal flashing at roof penetrations.

E. Perimeter Terminals:
   1. Maximum Spacing: 20 feet.
   2. Maximum Distance From Outside Edge of Building: 2 feet.

F. Roof Ridge Terminals: Maximum spacing 20 feet.

G. Mid-Roof Terminals: Maximum spacing 50 feet.

3.04 CONDUCTORS

A. Conceal whenever practical.

B. Provide 1-inch PVC conduit in building walls or columns for main downleads and roof risers.

C. Support: Maximum spacing for exposed conductors.

D. Vertical and Horizontal: 3 feet.

E. Maintain horizontal and vertical conductor courses free from dips or pockets.

F. Bends: Maximum 90 degrees, with minimum 8-inch radius.

G. Install air terminal conductors on the structural roof surface before roofing composition is applied.

3.05 BONDING

A. Bond to Main Conductor System:
   1. All roof mounted ventilators, fans, air handlers, masts, flues, cooling towers, handrails, and other sizeable metal objects.
   2. Roof flashing, gravel stops, insulation vents, ridge vents, roof drains, soil pipe vents, and other small metal objects if located within 6 feet of main conductors or another grounded object.
   3. Provide air terminals as required.

B. Bond steel columns or major framing members to grounding system per National Electrical Code.

C. Bond each main down conductor to grounding system.

3.06 GROUNDING SYSTEM

A. Grounding Conductor:
   1. Completely encircle building structure.
   2. Bury minimum 30” below finished grade.
   3. Minimum 2 feet distance from foundation walls.

B. Interconnect ground rods by direct-buried copper cables.

C. Connections:
   1. Install ground cables continuous between connections.
   2. Exothermic welded connections to ground rods, cable trays, structural steel, handrails, and buried and non-accessible connections.
   3. Provide bolted clamp type mechanical connectors for all exposed secondary connections.
   4. Use bolded offset parapet bases or through-roof concealed base assemblies for air terminal connections.
   5. Provide interconnections with electrical and telephone systems and all underground water and metal pipes.
   6. Provide electric service arrestor ground wire to building water main.

3.07 FIELD QUALITY CONTROL

A. Isolate lightning protection system from other ground conditions while performing tests.

B. Resistance: Test ground resistance of grounding system by the fall-of-potential method.
   1. Test Resistance to Ground: Maximum 25 ohms per National Electric Code.
   2. Install additional ground rods as required to obtain maximum allowable resistance.

C. Test Report:
   1. Description of equipment tested.
   2. Description of test.
   3. Test results.
   4. Conclusions and recommendations.
   5. Appendix, including appropriate test forms.
   6. Identification of test equipment used.
   7. Signature of responsible test organization authority.

END OF SECTION

SECTION 16950

ELECTRICAL TESTING

PART 1 GENERAL

1.01 REFERENCES

A. The following is a list of standards which may be referenced in this section:
   1. American National Standards Institute (ANSI):
      a. 450, Recommended Practice for Maintenance, Testing, and Replacement of Large lead Storage Batteries for Generator Stations and Substations.
      b. C2, National Electrical Safety Code.
      c. C37.20.1, Metal-Enclosed Low Voltage Power Circuit Breaker Switchgear.
      d. C37.20.2, Metal-Clad and Station-Type Cubicle Switchgear.
      e. C37.20.3, Metal-Enclosed Interrupter Switchgear.
      f. C62.33, Standard Test Specifications for Varistor Surge- Protective Devices.
   2. ASTM International (ASTM):
      a. D665, Standard Test Method for Rust Preventing Characteristics of inhibited Mineral Oil in the Presence of Water.
      b. DS77, Standard Test Method for Dielectric Breakdown Voltage of Insulating Liquids Using Disk Electrodes.
      c. D923, Standard Test Method for Sampling Electrical Insulating Liquids.
      d. D924, Standard Test Methods for A-Class Characteristics and Relative Permittivity (Dielectric Constant) of Electrical Insulating Liquids.
      e. D971, Standard Test Method for Interfacial Tension of 0.1 Against Water by the Ring Method.
      f. D974, Standard Test Method for Acid and Base Number by Color-Indicator Titration.
      g. D1298, Standard Test Method for Density, Relative Density (Specific Gravity), or API Gravity of Crude Petroleum and Liquid Petroleum Products by Hydrometer Method.
      h. D1500, Standard Test Method for ASTM Color of Petroleum Products.
      i. D1524, Standard Test Method for Visual Examination of Used Electrical Insulating Oils of Petroleum Origin in the Field.
      j. D1533, Standard Test Methods for Water in Insulating Liquids.
      k. D1816, Standard Test Method for Dielectric Breakdown Voltage of Insulating Oils of Petroleum Origin Using VDE Electrodes.
      l. D2285, Standard Test Method for Interfacial Tension of Electrical Insulating Oils of Petroleum Origin Against Water by the Drop-Weight Method.
   3. Institute of Electrical and Electronics Engineers (IEEE):
      a. 43, Recommended Practice for Testing Insulating Resistance of Rotating Machinery.
      b. 48, Standard Test Procedures and Requirements for High-Voltage Alternating-Current Cable Terminators.
      c. 81, Guide for Measuring Earth Resistivity, Ground Impedance, and Earth Surface Potentials of a Ground System.

d. 95, Recommended Practice for Insulation Testing of Large AC Rotating Machinery with High Direct Voltage.
e. 118, Standard Test Code for Resistance Measurement.
f. 400, Guide for Making High-Direct-Voltage Tests on Power Cable Systems in the Field.

4. National Electrical Manufacturers Association (NEMA):
   a. AB 4, Guideline for Inspection and Preventive Maintenance of Molded Case Circuit Breakers Used in Commercial and Industrial Applications.
   b. PB 2, Deadfront Distribution Switchboards.
   c. WC 7, Cross-Linked-Thermosetting-Polyethylene- Wire and Cable for the Transmission and Distribution of Electrical Energy.
   d. WC 8, Ethylene-Propylene-Rubber-Insulated Wire and Cable for the Transmission and Distribution of Electrical Energy.
5. International Electrical Testing Association (NETA): ATS, Acceptance Testing Specifications for Electrical Power Distribution Equipment and Systems.
6. National Fire Protection Association (NFPA):
   a. 70, National Electrical Code (NEC).
   b. 70E, Standard for Electrical Safety Requirements for Employee Workplaces.

1.02 SUBMITTALS

A. Administrative Submittals: Submit 30 days prior to performing inspections or tests:
   1. Schedule for performing inspection and tests.
   2. List of references to be used for each test.
   3. Sample copy of equipment and materials inspection form(s).
   4. Sample copy of individual device test form.
   5. Sample copy of individual system test form.

B. Quality Control Submittals: Submit within 30 days after completion of test:
   1. Test or inspection reports and certificates for each electrical item tested.

C. Contract Closeout Submittals:
   1. Operation and Maintenance Data:
      a. In accordance with Section 01782, OPERATION AND MAINTENANCE DATA.
      b. After test or inspection reports and certificates have been reviewed by Engineer and returned, insert a copy of each in operation and maintenance manual.

1.03 QUALITY ASSURANCE

A. Testing Firm Qualifications:
   1. Corporately and financially independent organization functioning as an unbiased testing authority.
   2. Professionally independent of manufacturers, suppliers, and installers, of electrical equipment and systems being tested.
   3. Employer of Engineers and technicians regularly engaged in testing and inspecting of electrical equipment, installations, and systems.

4. Supervising Engineer accredited as Certified Electrical Test Technologist by National Institute for Certification of Engineering Technologists (NICET), or International Electrical Testing Association and having a minimum of 5 years testing experience on similar projects.
5. Technicians certified by NICET or NETA.
6. Assistants and apprentices assigned to project at ratio not to exceed two certified to one noncertified assistant or apprentice.
7. Registered Professional Engineer to provide comprehensive project report outlining services performed, results of such services, recommendations, actions taken, and opinions.
8. In compliance with OSHA Title 29, Part 1907 criteria for accreditation of testing laboratories or a full Member Company of International Electrical Testing Association.

B. Test equipment shall have an operating accuracy equal to, or greater than, requirements established by NETA ATS.

C. Test instrument calibration shall be in accordance with NETA ATS.

1.04 SEQUENCING AND SCHEDULING

A. Perform inspection and electrical tests after equipment has been installed.

B. Perform tests with apparatus de-energized whenever feasible.

C. Inspection and electrical tests on energized equipment are to be:
1. Scheduled with Engineer prior to de-energization.
2. Minimized to avoid extended period of interruption to the operating plant equipment.

D. Notify Engineer at least 24 hours prior to performing tests on energized electrical equipment.

PART 2 PRODUCTS

A. Not Used.

PART 3 EXECUTION

3.01 GENERAL

A. Tests specified in this section are to be performed in accordance with the requirements of Section 01756, FACILITY STARTUP.

B. Tests and inspection shall establish that:
1. Electrical equipment is operational within industry and manufacturer's tolerances.
2. Installation operates properly.
3. Equipment is suitable for energization.
4. Installation conforms to requirements of Contract Documents and NFPA 70, NFPA 70E, and ANSI C2.

C. Perform inspection and testing in accordance with NETA ATS, industry standards, and manufacturer's recommendations.

D. Set, test, and calibrate protective relays, circuit breakers, fuses, and other applicable devices.

E. Adjust mechanisms and moving parts for free mechanical movement.

F. Adjust adjustable relays and sensors to correspond to operating conditions, or as recommended by manufacturer.

G. Verify nameplate data for conformance to Contract Documents.

H. Realign equipment not properly aligned and correct unevenness.

I. Properly anchor electrical equipment found to be inadequately anchored.

J. Tighten accessible bolted connections, including wiring connections, with calibrated torque wrench to manufacturer's recommendations, or as otherwise specified.

K. Clean contaminated surfaces with cleaning solvents as recommended by manufacturer.

L. Provide proper lubrication of applicable moving parts.

M. Inform Engineer of working clearances not in accordance with NFPA 70.

N. Investigate and repair or replace:
   1. Electrical items that fail tests.
   2. Active components not operating in accordance with manufacturer's instructions.
   3. Damaged electrical equipment.

O. Electrical Enclosures:
   1. Remove foreign material and moisture from enclosure interior.
   2. Vacuum and wipe clean enclosure interior.
   3. Remove corrosion found on metal surfaces.
   4. Repair or replace, as determined by Engineer, door and panel sections having dented surfaces.
   5. Repair or replace, as determined by Engineer, poor fitting doors and panel sections.
   6. Repair or replace improperly operating latching, locking, or interlocking devices.
   7. Replace missing or damaged hardware.
   8. Finish:
      a. Provide matching paint and touch up scratches and mars.
      b. If required due to extensive damage, as determined by Engineer, refinish the entire assembly.

P. Replace fuses and circuit breakers that do not conform to size and type required by the Contract Documents.

Q. Replace transformer insulating oil not in compliance with ASTM D923.

3.02 LOW VOLTAGE CABLES, 600 VOLTS MAXIMUM

A. Visual and Mechanical Inspection:
   1. Inspect Each Individual Exposed Power Cable No. 6 and Larger For:
      a. Physical damage.
      b. Proper connections in accordance with single-line diagram.
      c. Cable bends not in conformance with manufacturer's minimum allowable bending radius where applicable.
      d. Color coding conformance with specifications.
      e. Proper circuit identification.
   2. Mechanical Connections For:
      a. Proper lug type for conductor material.
      b. Proper lug installation.
      c. Bolt torque level in accordance with NETA ATS, Table 10. 1, unless otherwise specified by manufacturer.
   3. Shielded Instrumentation Cables For:
      a. Proper shield grounding.
      b. Proper terminations.
      c. Proper circuit identification.
   4. Control Cables For:
      a. Proper termination.
      b. Proper circuit identification.
   5. Cables Terminated Through Window Type CTs: Verify that neutrals and grounds are terminated for correct operation of protective devices.

B. Electrical Tests for Conductors No. 6 and Larger:
   1. Insulation Resistance Tests:
      a. Test each conductor with respect to ground and to adjacent conductors per IEEE 118 procedures for 1 minute.
      b. Evaluate ohmic values by comparison with conductors of same length and type.
      c. Investigate values less than 50 megohms.
      d. Utilize 1,000V dc megohmmeter for 600V insulated conductors.
   2. Continuity test by ohmmeter method to ensure proper cable connections.

3.03 SAFETY DISCONNECT SWITCHES, 600 VOLTS MAXIMUM

A. Visual and Mechanical Inspection:
   1. Proper blade pressure and alignment.
   2. Proper operation of switch operating handle.
   3. Adequate mechanical support for each fuse.
   4. Proper contact-to-contact tightness between fuse clip and fuse.
   5. Cable connection bolt torque level in accordance with NETA ATS, Table 10.1.
   6. Proper phase barrier material and installation.
   7. Verify that fuse sizes and types correspond to one-line diagram.
   8. Perform mechanical operational test and verify electrical and mechanical interlocking system operation and sequencing.

B. Electrical Tests:
   1. Insulation Resistance Tests:
      a. Applied megohmmeter dc voltage in accordance with NETA ATS, Table 10.2.

b. Phase-to-phase and phase-to-ground for 1 minute on each pole.
c. Insulation resistance values equal to, or greater than, ohmic values established by manufacturer.

2. Contact Resistance Tests:
a. Contact resistance in microhms across each switch blade and fuse holder.
b. Investigate deviation of 50 percent or more from adjacent poles or similar switches.

3.04 MOLDED AND INSULATED CASE CIRCUIT BREAKERS

A. General: Inspection and testing limited to circuit breakers rated 70 amperes and larger and to motor circuit protector breakers rated 50 amperes and larger.

B. Visual and Mechanical Inspection:
1. Proper mounting.
2. Proper conductor size.
3. Feeder designation according to nameplate and one-line diagram.
4. Cracked casings.
5. Connection bolt torque level in accordance with NETA ATS, Table 10.1.
6. Operate breaker to verify smooth operation.
7. Compare frame size and trip setting with circuit breaker schedules or one-line diagram.
8. Verify that terminals are suitable for 75 degrees C rated insulated conductors.

C. Electrical Tests:
1. Insulation Resistance Tests:
a. Utilize 1,000-volt dc megohmmeter for 480- and 600-volt circuit breakers and 500-volt dc megohmmeter for 240-volt circuit breakers.
b. Pole-to-pole and pole-to-ground with breaker contacts opened for 1 minute.
c. Pole-to-pole and pole-to-ground with breaker contacts closed for 1 minute.
d. Test values to comply with NETA ATS, Table 10.2.
2. Contact Resistance Tests:
a. Contact resistance in microhms across each pole.
b. Investigate deviation of 50 percent or more from adjacent poles and similar breakers.
3. Primary Current Injection Test to Verify:
a. Long-time minimum pickup and delay.
b. Short-time pickup and delay.
c. Ground fault pickup and delay.
d. Instantaneous pickup by run-up or pulse method.
e. Trip characteristics of adjustable trip breakers shall be within manufacturer's published time-current characteristic tolerance band, including adjustment factors.
f. Trip times shall be within limits established by NEMA AB 4, Table 5-3.
g. Instantaneous pickup value shall be within values established by NEMA AB 4, Table 5-4.

3.05 INSTRUMENT TRANSFORMERS

A. Visual and Mechanical Inspection:
   1. Visually Check Current, Potential, and Control Transformers For:
      a. Cracked insulation.
      b. Broken leads or defective wiring.
      c. Proper connections.
      d. Adequate clearances between primary and secondary circuit wiring.
   2. Verify Mechanically That:
      a. Grounding and shorting connections have good contact.
      b. Withdrawal mechanism and grounding operation, when applicable, operate properly.
   3. Verify proper primary and secondary fuse sizes for potential transformers.

B. Electrical Tests:
   1. Current Transformer Tests:
      a. Insulation resistance test of transformer and wiring-to-ground at 1,000 volts dc for 30 seconds.
      b. Polarity test.
   2. Potential Transformer Tests:
      a. Insulation resistance test at test voltages in accordance with NETA ATS, Table 7.1.1 for 1 minute on:
         1) Winding-to-winding.
         2) Winding-to-ground.
      b. Polarity test to verify polarity marks or H1-X1 relationship as applicable.
   3. Insulation resistance measurement on instrument transformer shall not be less than that shown in NETA ATS, Table 7.1.1.

3.06 METERING

A. Visual and Mechanical Inspection:
   1. Verify meter connections in accordance with appropriate diagrams.
   2. Verify meter multipliers.
   3. Verify that meter types and scales conform to Contract Documents.
   4. Check calibration of meters at cardinal points.
   5. Check calibration of electrical transducers.

3.07 GROUNDING SYSTEMS

A. Visual and Mechanical Inspection:
   1. Equipment and circuit grounds in motor control centers, panelboards, switchboards, and switchgear assemblies for proper connection and tightness.
   2. Ground bus connections in motor control centers, panelboards, switchboards, and switchgear assemblies for proper termination and tightness,
   3. Effective transformer core and equipment grounding.
   4. Accessible connections to grounding electrodes for proper fit and tightness.
   5. Accessible exothermic-weld grounding connections to verify that molds were fully filled and proper bonding was obtained.

B. Electrical Tests:
   1. Fall-Of-Potential Test:
      a. In accordance with IEEE 81, Section 8.2.1.5 for measurement of main ground system's resistance.

b. Main ground electrode system resistance to ground to be no greater than 5 ohms.

2. Two-Point Direct Method Test:
   a. In accordance with IEEE 81, Section 8.2. 1.1 for measurement of ground resistance between main ground system, equipment frames, and system neutral and derived neutral points.
   b. Equipment ground resistance shall not exceed main ground system resistance by 0.50 ohm.

3.08 GROUND FAULT SYSTEMS

A. Inspection and Testing Limited To:
   1. Zero sequence grounding systems.
   2. Residual ground fault systems.

B. Visual and Manual Inspection:
   1. Neutral Main Bonding Connection to Assure:
      a. Zero sequence sensing system is grounded ahead of neutral disconnect link.
      b. Ground strap sensing system is grounded through sensing device.
      c. Neutral ground conductor is solidly grounded.
   2. Verify that control power has adequate capacity for system.
   3. Manually Operate Monitor Panels For:
      a. Trip test.
      b. No trip test.
      c. Non-automatic rest.
   4. Zero sequence system for symmetrical alignment of core balance transformers about current carrying conductors.
   5. Relay check for pickup and time under simulated ground fault conditions.
   6. Verify nameplate identification by device operation.

C. Electrical Tests:
   1. Test system neutral insulation resistance with neutral ground link removed. System neutral insulation resistance shall be 1 megohm minimum.
   2. Determine relay pickup by primary current injection at the sensor. Relay pickup current within plus or minus 10 percent of device dial or fixed setting.
   3. Test relay timing by injecting 300 percent of pickup current, or as specified by manufacturer. Relay operating time shall be in accordance with manufacturer's time-current characteristic curves.
   4. Test system operation at 55 percent rated control voltage, if applicable.
   5. Test zone interlock system by simultaneous sensor current injection and monitoring zone blocking functions.

3.09 LOW VOLTAGE MOTOR CONTROL

A. Visual and Mechanical Inspection:
   1. Proper barrier and shutter installation and operation.
   2. Proper operation of indicating and monitoring devices.
   3. Proper overload protection for each motor.
   4. Improper blockage of air cooling passages.
   5. Proper operation of drawout elements.
   6. Integrity and contamination of bus insulation system.

7. Check Door and Device Interlocking System By:
    a. Closure attempt of device when door is in OFF or OPEN position.
    b. Opening attempt of door when device is in ON or CLOSED position.
8. Check Key Interlocking Systems For:
    a. Key captivity when device is in ON or CLOSED position.
    b. Key removal when device is in OFF or OPEN position.
    c. Closure attempt of device when key has been removed.
    d. Correct number of keys in relationship to number of lock cylinders.
    e. Existence of other keys capable of operating lock cylinders; destroy duplicate sets of keys.
9. Check Nameplates for Proper Identification Of:
    a. Equipment title and tag number with latest one-line diagram.
    b. Pushbuttons.
    c. Control switches.
    d. Pilot lights.
    e. Control relays.
    f. Circuit breakers.
    g. Indicating meters.
10. Verify that fuse and circuit breaker sizes and types conform to Contract Documents.
11. Verify that current and potential transformer ratios conform to Contract Documents.
12. Check Bus Connections for High Resistance by Low Resistance Ohmmeter and Thermographic Survey:
    a. Ohmic value to be zero.
    b. Bolt torque level in accordance with NETA ATS, Table 10.1, unless otherwise specified by manufacturer.
    c. Thermographic survey temperature gradient of 2 degrees C, or less.
13. Check Operation and Sequencing of Electrical and Mechanical Interlock Systems By:
    a. Closure attempt for locked open devices.
    b. Opening attempt for locked closed devices.
    c. Key exchange to operate devices in OFF-NORMAL positions.
14. Verify performance of each control device and feature furnished as part of the motor control center.
15. Control Wiring:
    a. Compare wiring to local and remote control, and protective devices with elementary diagrams.
    b. Check for proper conductor lacing and bundling.
    c. Check for proper conductor identification.
    d. Check for proper conductor lugs and connections.
16. Exercise active components.
17. Inspect Contactors For:
    a. Correct mechanical operations.
    b. Correct contact gap, wipe, alignment, and pressure.
    c. Correct torque of all connections.
18. Compare overload heater rating with full-load current for proper size.
19. Compare motor protector and circuit breaker with motor characteristics and power factor correction capacitors for proper size.
20. Perform phasing check on double-ended motor control centers to ensure proper bus phasing from each source.

B. Electrical Tests:
   1. Insulation Resistance Tests:
      a. Applied megohmmeter dc voltage in accordance with NETA ATS, Table 10.2.
      b. Bus section phase-to-phase and phase-to-ground for 1 minute on each phase.
      c. Contactor phase-to-ground and across open contacts for 1 minute on each phase.
      d. Starter section phase-to-phase and phase-to-ground on each phase with starter contacts closed and protective devices open.
      e. Test values to comply with NETA ATS, Table 10.2.
   2. Overpotential Tests:
      a. Maximum applied ac or dc voltage in accordance with NETA ATS, Table 7.1.2.
      b. Phase-to-phase and phase-to-ground for 1 minute for each phase of each bus section.
      c. Test results evaluated on pass/fail basis.
   3. Current Injection through Overload Unit at 300 Percent of Motor Full-Load Current and Monitor Trip Time:
      a. Trip time in accordance with manufacturer's published data.
      b. Investigate values in excess of 120 seconds.
   4. Control Wiring Tests:
      a. Apply secondary voltage to control power and potential circuits.
      b. Check voltage levels at each point on terminal boards and each device terminal.
      c. Insulation resistance test at 1,000 volts dc on control wiring except that connected to solid-state components.
         1) Insulation resistance to be 1 megohm minimum.
   5. Operational test by initiating control devices to affect proper operation.

3.10 AC INDUCTION MOTORS

A. General: Inspection and testing limited to motors rated 5 horsepower and larger.

B. Visual and Mechanical Inspection:
   1. Proper electrical and grounding connections.
   2. Shaft alignment.
   3. Blockage of ventilating air passageways.
   4. Operate Motor and Check For:
      a. Excessive mechanical and electrical noise.
      b. Overheating.
      c. Correct rotation.
      d. Check vibration detectors, resistance temperature detectors, or motor inherent protectors for functionality and proper operation.
      e. Excessive vibration.
   5. Check operation of space heaters.

C. Electrical Tests:
   1. Insulation Resistance Tests:
      a. In accordance with IEEE 43 at test voltages established by NETA ATS, Table 10.2 for:
         1) Motors above 200 horsepower for l0-minute duration with resistances tabulated at 30 seconds, 1 minute, and 10 minutes.
         2) Motors 200 horsepower and less for 1-minute duration with resistances tabulated at 30 and 60 seconds.
      b. Insulation resistance values equal to, or greater than, ohmic values established by manufacturers.
   2. Calculate polarization index ratios for motors above 200 horsepower. Investigate index ratios less than 1.5 for Class A insulation and 2.0 for Class B insulation.
   3. Insulation resistance test on insulated bearings in accordance with manufacturer's instructions.
   4. Measure running current and voltage, and evaluate relative to load conditions and nameplate full-load amperes.
   5. Overpotential Tests:
      a. Applied dc voltage in accordance with IEEE 95.
      b. Limited to 4,000-volt motors rated 1,000 horsepower and greater.
      c. Test results evaluated on pass/fail basis.

3.11 THERMOGRAPHIC SURVEY

A. Provide a thermographic survey of connections associated with incoming service conductors, bus work, and branch feeder conductors No. 2 and larger at each:
   1. Medium voltage switchgear and transformer.
   2. Switchboard.
   3. Low voltage motor control center.
   4. Panelboard.

B. Provide a thermographic survey of feeder conductors No. 2 and larger terminating at:
   1. Motors rated 30 horsepower and larger.
   2. Medium- and low-voltage disconnect switches.
   3. Transfer switches.
   4. Engine-generators.

C. Remove necessary enclosure metal panels and covers prior to performing survey.

D. Perform with equipment energized during periods of maximum possible loading.

E. Do not perform survey on equipment operating at less than 20 percent of rated connected operating load.

F. Utilize Thermographic Equipment Capable Of:
   1. Detecting emitted radiation.
   2. Converting detected radiation to visual signal.
   3. Detecting 1 degree C temperature difference between subject area and reference point of 30 degrees C.

G. Temperature Gradients Of:
   1. 3 degrees C to 7 degrees C indicates possible deficiency that warrants investigation.
   2. 7 degrees C to 15 degrees C indicates deficiency that is to be corrected as time permits.
   3. 16 degrees C and above indicates deficiency that is to be corrected immediately.

H. Provide Written Report Of:
   1. Areas surveyed and the resultant temperature gradients.
   2. Locations of areas having temperature gradients of 3 degrees C or greater.
   3. Cause of heat rise and actions taken to correct the cause of heat rise.
   4. Detected phase unbalance.

END OF SECTION

SECTION 17306

FLOW MEASUREMENT: ULTRASONIC DOPPLER

PART 1 GENERAL

1.01 SUMMARY

A. Section includes:
   1. Ultrasonic Doppler flow meters.

1.02 REFERENCES

A. International Organization for Standardization (ISO):
   1. 9001 - Quality Management Systems - Requirements.

B. International Society of Automation (ISA):
   1. 5.1 - Instrumentation Symbols and Identification.
   2. 5.4 - Instrument Loop Diagrams.
   3. 20 Instrument Forms Plus Pro-Combo-Enterprise Version (Microsoft SQL Server Express Database Software based).

C. National Electrical Code (NEC).

D. National Electrical Manufacturers Association (NEMA).

E. National Institute of Standards and Technology (NIST).

F. Underwriters Laboratories, Inc. (UL):
   1. 508 - Standard of Safety for Industrial Control Equipment.
   2. 508A - Standard of Safety for Industrial Control Panels.

1.03 SUBMITTALS

A. Furnish submittals as specified in Sections 01330 - Submittal Procedures.

B. Provide complete documentation covering the traceability of all calibration instruments.

C. Furnish commissioning submittals listed below and specified in this Section as specified in Section 01756 - Commissioning:
   1. Manufacturer’s representative qualifications.
   2. Owner training.

1.04 QUALITY ASSURANCE

A. Examine the complete set of Contract Documents and verify that the instruments are compatible with the installed conditions including:
   1. Process conditions: Fluids, pressures, temperatures, flows, materials etc.
   2. Physical conditions:
      a. Installation and mounting requirements.
      b. Location within the process.
      c. Accessories: Verify that all required accessories are provided and are compatible with the process conditions and physical installation.

B. Provide instruments manufactured at facilities certified to the quality standards of ISO 9001.

C. Provide equipment listed by and bearing the label of UL or of an independent testing laboratory acceptable to the Engineer and the Authority Having Jurisdiction.

1.05 DELIVERY, STORAGE, AND HANDLING

A. Upon receipt of instruments in the field:
   1. Outside of the package: Prominently display tag number identification.
   2. On each instrument: Provide a nameplate.

1.06 PROJECT OR SITE CONDITIONS

A. Project environmental conditions as specified in Section 01850 - Design Criteria.

1.07 ADMINISTRATIVE REQUIREMENTS

A. Coordination:
   1. Notify the Engineer if any installation condition does not meet the instrument manufacturer’s recommendations or specifications.

1.08 WARRANTY

A. As specified.

1.09 MAINTENANCE

A. Furnish all parts, materials, fluids, etc. necessary for operation, maintenance, and calibration purposes throughout the warranty period. Deliver all of these supplies before project substantial completion.

PART 2 PRODUCTS

2.01 GENERAL

A. Provide all instruments identified in the Contract Documents.

2.02 DESIGN AND PERFORMANCE CRITERIA

A. Provide instruments suitable for the installed site conditions including, but not limited to, material compatibility, site altitude, site seismic conditions, humidity, and process and ambient temperatures.

2.03 MANUFACTURERS

A. Ultrasonic clamp-on:
   1. The following or equal:
      a. Flexim Fluxus F721.

2.04 MANUFACTURED UNITS

A. Ultrasonic Doppler: clamp-on:
   1. General:
      a. Ultrasonic Doppler system shall consist of clamp-on sensor to produce 4 to 20 milliamperes DC signal that is directly proportional to the liquid flow rate.
      b. Each ultrasonic Doppler system shall include:
         1) Clamp-on sensor.
         2) Signal cable.
         3) Remote mount transmitter.
         4) Sensor compound kit and sensor mounting clamps.
   2. Performance requirements:
      a. Accuracy:
         1) 1 percent of flow rate.
      b. Repeatability:
         1) 0.25 percent of full-scale.
   3. Element:
      a. 2 encapsulated single or dual-frequency sensor heads suitable for submersible/underground service.
      b. Type 316 stainless steel mounting clamp assembly.
   4. Transmitter:
      a. Power supply:
         1) 120 VAC.
         2) Power consumption: 30 VA maximum.
      b. Outputs:
         1) Isolated 4 to 20 milliamperes DC with HART communication protocol.
         2) As indicated on the instrument datasheets.
         3) Relay outputs:
            a) 2 Form C contact.
      c. Microprocessor-based signal converter/transmitter.
      d. Enclosure: NEMA 4X enclosure.
      e. RS485 serial interface.
      f. Ambient operating temperature limits of -29 to 60 degrees Celsius (-20 to 140 degrees Fahrenheit).

2.05 ACCESSORIES

A. Provide sunshades for outdoor installations.

2.06 FINISHES (NOT USED)

2.07 SOURCE QUALITY CONTROL

A. Factory calibrate each instrument with a minimum 3-point calibration or according to Manufacturer's standard at a facility that is traceable to the NIST.
   1. Submit calibration data sheets to the Engineer at least 30 days before shipment of the instruments to the project site.

PART 3 EXECUTION

3.01 EXAMINATION

A. Examine the installation location for the instrument and verify that the instrument will work properly when installed.

3.02 INSTALLATION

A. Field instruments installation:
   1. Install field instruments as specified in the Contract Documents, API RP 550 and RP 551, and the manufacturer's instructions.
   2. Mount field instruments so that they can be easily read, readily approached, and easily serviced, and so they do not restrict access to mechanical equipment:
      a. Mount field instruments on a pipe stand or local panel, if they are not directly mounted, unless otherwise indicated on the Drawings.
      b. Provide sun shields for field electronic instruments located outdoors.
   3. Make connections from rigid conduit systems to field instruments with PVC coated flexible conduit:
      a. Type of flexible conduit required for the area classification.
      b. Maximum length of 18 inches.
   4. Connect field instruments with cable as specified in the Electrical Specifications, except when the manufacturer requires the use of special cable, or otherwise specified in this Section:
      a. Special cable applications shall be in accordance with the NEC.
   5. Verify the correctness of each installation:
      a. Polarity of electric power and signal connections.
   6. Ensure all process connections are free of leaks.

B. Coordinate the installation with all trades to ensure that the mechanical system has all necessary appurtenances including weld-o-lets, valves, etc. for proper installation of instruments.

3.03 COMMISSIONING

A. As specified in Section 01756 - Commissioning.

B. Owner Training:
   1. Perform Owner training as specified in Section 01756 - Commissioning.
   2. Number of sessions:
      a. Operations 1.
      b. Maintenance 1.

3.04 SCHEDULES

A. The provided information does not necessarily include all required instruments. Provide all instruments identified in the Contract Documents:
   1. Instruments may be indicated on the Drawings, specified in the Specifications, or both.

END OF SECTION

Plot Date: 28-MAR-2024 6:03:08 AM
User: svcPW
PlotScale: 1:1
DesignScript: Carollo_Std_Pen_v0905.pen
ColorTable: gshade.ctb
Model: Layout1
creinbold

CITY OF STUART

STUART WRF HEADWORKS REHABILITATION

BID SET SUBMITTAL

MARCH 2024

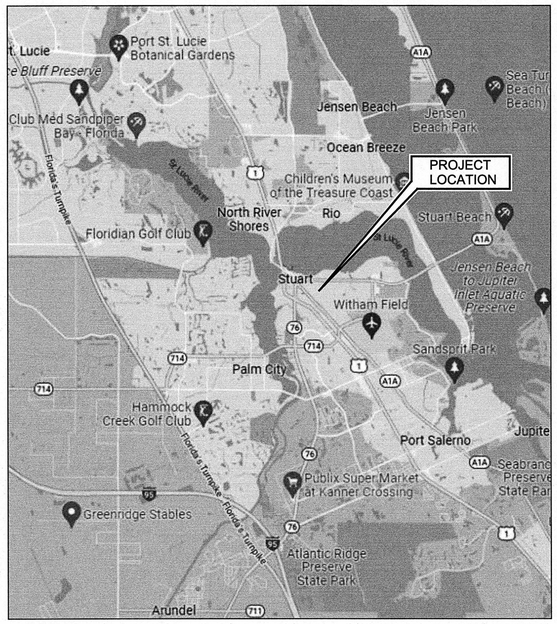

VICINITY MAP
NO SCALE



LOCATION MAP
NO SCALE

carollo®

2056 VISTA PARKWAY, SUITE 400
WEST PALM BEACH, FL 33411
PHONE: 561-868-6403 FAX: 561-868-6401
CA 00008571

3/22/24

JOB NO. 201076
DRAWING NO. G01
SHEET NO. 1 OF 29

PROJECT NO. 11599A10
FILE NAME: 20107600G01.dgn

SHEET NO.	DWG NO.	DESCRIPTION
		(G) - GENERAL
1	G01	COVER SHEET
2	G02	DRAWING INDEX
3	G03	GENERAL NOTES, LEGEND AND SYMBOLS
4	G04	GENERAL ABBREVIATIONS
		(D) - DEMOLITION
5	D01	HEADWORKS METAL BUILDING PLAN AND ELEVATIONS
6	D02	HEADWORKS METAL BUILDING SECTIONS
7	D03	HEADWORKS PLAN, SECTION AND DETAIL
		(C) - CIVIL
8	C01	BYPASS YARD PIPING PLAN
		(S) - STRUCTURAL
9	S01	STRUCTURAL NOTES
10	S02	HEADWORKS PLAN
11	S03	HEADWORKS SECTIONS AND DETAILS
12	S04	HEADWORK DETAILS
13	S05	DETAILS 1
14	S06	DETAILS 2
		(M) - MECHANICAL
15	M01	MECHANICAL LEGEND AND SYMBOLS
16	M02	HEADWORKS PLANS
17	M03	HEADWORKS SECTIONS AND DETAILS
		(E) - ELECTRICAL
18	GE01	LEGEND
19	GE02	NOTES
20	E01	GROUNDING PLAN
21	E02	LIGHTING PLAN
22	E03	RECEPTACLE PLAN
23	E04	SCHEDULES
24	E05	DEMOLITION DETAILS
25	E06	HEADWORKS BYPASS YARD PIPING PLAN
26	E07	DETAILS SHEET NO 1
27	E08	DETAILS SHEET NO 2
		(T) - TYPICAL DETAILS
28	TA01	ARCHITECTURAL 1
29	TS01	STRUCTURAL 1

REV	DATE	BY	DESCRIPTION

DESIGNED CE
DRAWN CE
CHECKED CE
DATE FEBRUARY 2023

3/20/24

carollo®
2056 VISTA PARKWAY, SUITE 400
WEST PALM BEACH, FL 33411
PHONE: 561-868-6403 FAX: 561-868-6401
CA 00008571

CITY OF STUART

WRF HEADWORKS REHABILITATION - PHASE 1

GENERAL

DRAWING INDEX

VERIFY SCALES
BAR IS ONE INCH ON ORIGINAL DRAWING
0 1"
IF NOT ONE INCH ON THIS SHEET, ADJUST SCALES ACCORDINGLY

JOB NO. 201076
DRAWING NO. G02
SHEET NO. 2 OF 29

PROJECT NO. 201076-100000 FILE NAME: 20107600G02.dgn

LAST SAVED BY: TDietz Model: Layout1 ColorTable: gshade.ctb DesignScript: Carollo_Std_Pen_v0905.pen PlotScale: 1:1 User: svcPW Plot Date: 24-FEB-2023 9:31:47 AM

GENERAL NOTES

1. FOLLOWING NOTES ARE GENERAL AND APPLY TO ALL SHEETS OF THESE CONTRACT DOCUMENTS AS IF THEY WERE WRITTEN IN THEIR ENTIRETY ON EACH SHEET.
2. CONTRACTOR SHALL VERIFY ALL DIMENSIONS BEFORE STARTING WORK AND SHALL IMMEDIATELY NOTIFY THE ENGINEER OF ANY DISCREPANCIES. CONTRACTOR SHALL BE RESPONSIBLE FOR FIELD VERIFYING ALL EXISTING CONDITIONS INCLUDING LOCATION AND DIMENSIONS OF ALL EXISTING CONSTRUCTION AND UTILITIES. CONTRACTOR SHALL NOTIFY ENGINEER IF THERE IS A CONFLICT BETWEEN THE CONTRACT DOCUMENTS AND EXISTING CONSTRUCTION BEFORE PROCEEDING WITH WORK.
3. UNLESS DETAILED, SPECIFIED, OR OTHERWISE INDICATED ON THE DRAWINGS, CONSTRUCTION SHALL BE AS INDICATED IN THE APPLICABLE TYPICAL DETAILS AND GENERAL NOTES. TYPICAL DETAILS SHALL APPLY EVEN THOUGH NOT REFERENCED AT SPECIFIC LOCATIONS ON DRAWINGS.
4. WHERE NO CONSTRUCTION DETAILS ARE SHOWN OR NOTED FOR ANY PART OF WORK. DETAILS SHALL BE IN THE SAME AS FOR OTHER SIMILAR WORK.
5. CONTRACTOR SHALL COMPLY WITH LOCAL CONSTRUCTION STORM WATER DISCHARGE REGULATIONS AND REQUIREMENTS.
6. PRIOR TO EXCAVATION FOR NEW STRUCTURES, ELECTRICAL CONDUIT, FABRICATION OF NEW PIPING AND/OR OTHER PROPOSED UTILITIES, CONTRACTOR SHALL BE RESPONSIBLE FOR VERIFYING THE LOCATION OF ALL EXISTING PIPING AND UTILITIES IN THE CONSTRUCTION AREA. THE CONTRACTOR SHALL TEMPORARILY RELOCATE CONFLICTING EXISTING UTILITIES AT TIE-IN/CONNECTION LOCATIONS AND REINSTALL THEM AS REQUIRED TO ELIMINATE THE CONFLICT AT NO ADDITIONAL COST TO THE OWNER.
7. ALL PIPELINES 12" AND LARGER SHALL HAVE A MINIMUM COVER OF 36" UNLESS THE COVER DEPTH IS SPECIFICALLY INDICATED ON THE DRAWINGS. PIPE SMALLER THAN 12" SHALL HAVE A MINIMUM COVER OF 30" UNLESS NOTED OTHERWISE. PIPES SHALL BE ROUTED AS SHOWN UNLESS MINOR REVISIONS ARE NECESSARY TO MISS EXISTING PIPES, STRUCTURES, ETC. CONTRACTOR SHALL BE RESPONSIBLE FOR FURNISHING ALL FITTINGS AND ADAPTERS REQUIRED TO MAKE THE ROUTING CHANGES AT NO ADDITIONAL COST TO THE OWNER. CONTRACTOR SHALL INCLUDE COST FOR THIS IN THE BID.
8. EXISTING FACILITY AND UTILITY INFORMATION SHOWN ON THE DRAWINGS WAS OBTAINED FROM AVAILABLE RECORDS OR ELECTRONIC FILES. NEITHER THE OWNER NOR ENGINEER ASSUMES ANY RESPONSIBILITY FOR FACILITIES AND UTILITIES NOT SHOWN OR NOT IN THE LOCATION SHOWN. THE CONTRACTOR SHALL FIELD VERIFY ALL LOCATIONS, SIZES, MATERIAL TYPES, AND ELEVATIONS SHOWN AROUND OR NEAR AREAS OF NEW CONSTRUCTION PRIOR TO START OF CONSTRUCTION.
9. THE CONTRACTOR SHALL TAKE ALL PRECAUTIONARY MEASURES NECESSARY TO PROTECT FROM DAMAGE EXISTING FACILITIES AND UTILITIES SHOWN OR NOT SHOWN THAT ARE TO REMAIN IN PLACE. ALL FACILITIES DAMAGED BY THE CONTRACTOR'S OPERATIONS SHALL BE EXPEDITIOUSLY REPAIRED OR RECONSTRUCTED TO THE ORIGINAL OR BETTER CONDITION AT THE CONTRACTOR'S EXPENSE WITHOUT ADDITIONAL COMPENSATION.
10. CONTRACTOR SHALL MAKE CONNECTIONS TO EXISTING PIPE, EQUIPMENT, ETC. AS REQUIRED AND SHALL PROVIDE ALL FITTINGS, ADAPTERS, AND APPURTENANCES REQUIRED TO MAKE THE CONNECTIONS. PROVIDE ALL SUPPORTS REQUIRED FOR A RIGIDLY SUPPORTED COMPLETE AND WORKING SYSTEM.
11. ADJUST ALL VALVE BOXES, VAULTS, PULL BOXES, AND MANHOLES TO FINISHED GRADE UNLESS OTHERWISE SHOWN OR DIRECTED. MANHOLES IN OPEN FIELDS SHALL BE SET TWELVE INCHES ABOVE FINISHED GRADE AND VAULTS SHALL BE SIX INCHES ABOVE FINISHED GRADE.
12. THE CONTRACTOR SHALL CONTACT THE PROPER UTILITY REPRESENTATIVE AS FOLLOWS FOR QUESTIONS OR COORDINATION OF CONSTRUCTION RELATED TO EXISTING UTILITIES.
13. CONTRACTOR SHALL VERIFY THAT PIPING SHOWN TO BE ABANDONED OR AS ABANDONED PREVIOUSLY IS NO LONGER IN SERVICE. LINES IN SERVICE SHALL BE MAINTAINED UNTIL NO LONGER REQUIRED BY THE PLANT.
14. ALL EXISTING PIPES THAT ARE TO BE ABANDONED IN PLACE OR REMOVED MAY NOT BE SHOWN. WHERE PIPING IS TO BE ABANDONED AND MUST REMAIN IN SERVICE UNTIL COMPLETION OF OTHER PHASES OF WORK, AND IT CONFLICTS WITH NEW PIPING, TEMPORARILY RELOCATE PIPING AS REQUIRED TO MAINTAIN SERVICE BY THE PLANT.
15. CONTRACTOR SHALL REROUTE THE EXISTING PIPING IF REQUIRED TO MISS THE PROPOSED STRUCTURES. THE EXISTING PIPE SHALL REMAIN IN SERVICE UNTIL NEW PIPING IS READY TO BE PLACED INTO SERVICE. DOWNTIME SHALL BE A MAXIMUM OF 2 HOURS, UNLESS SPECIFIED OR SHOWN OTHERWISE.
16. ALL SIDEWALKS TO BE 3'-0" WIDE UNLESS SHOWN OTHERWISE.
17. THE CONTRACTOR SHALL TAKE SPECIAL PRECAUTIONS IN THE VICINITY OF ANY OVERHEAD ELECTRIC LINES. CONTRACTOR SHALL ABIDE BY THE NATIONAL ELECTRIC CODE AND ANY REQUIREMENT BY THE OWNER OF THE ELECTRIC LINES.
18. PROVIDE ALL SHEETING/SHORING REQUIRED TO PROTECT EXISTING STRUCTURES, PIPES AND FACILITIES.
19. CONTRACTOR SHALL VERIFY LOCATION OF ALL ARCHITECTURAL, MECHANICAL, AND ELECTRICAL ITEMS BEFORE PLACING ANY STRUCTURAL STEEL OR CONCRETE. ALSO, STRUCTURAL DIMENSIONS AND OPENINGS CONTROLLED BY ARCHITECTURAL, MECHANICAL, OR ELECTRICAL EQUIPMENT SHALL BE VERIFIED BY THE CONTRACTOR PRIOR TO CONSTRUCTION.
20. MECHANICAL AND ELECTRICAL EQUIPMENT SUPPORTS, ANCHORAGES, OPENINGS, RECESSES, AND REVEALS NOT SHOWN ON THE STRUCTURAL DRAWINGS, THAT ARE REQUIRED BY OTHER CONTRACT DRAWINGS, SHALL BE PROVIDED PRIOR TO CASTING CONCRETE.

LINE WORK

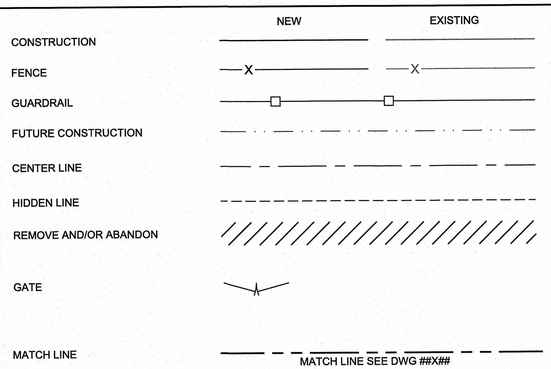

SYMBOLS

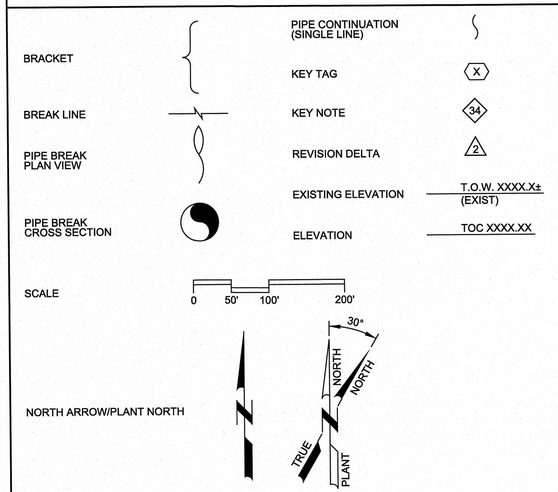

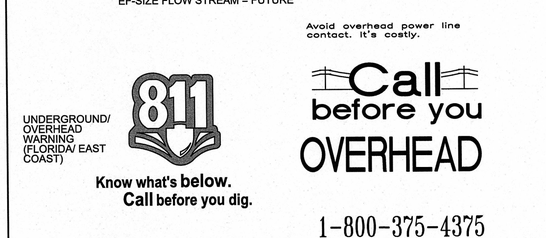

DETAIL REFERENCES

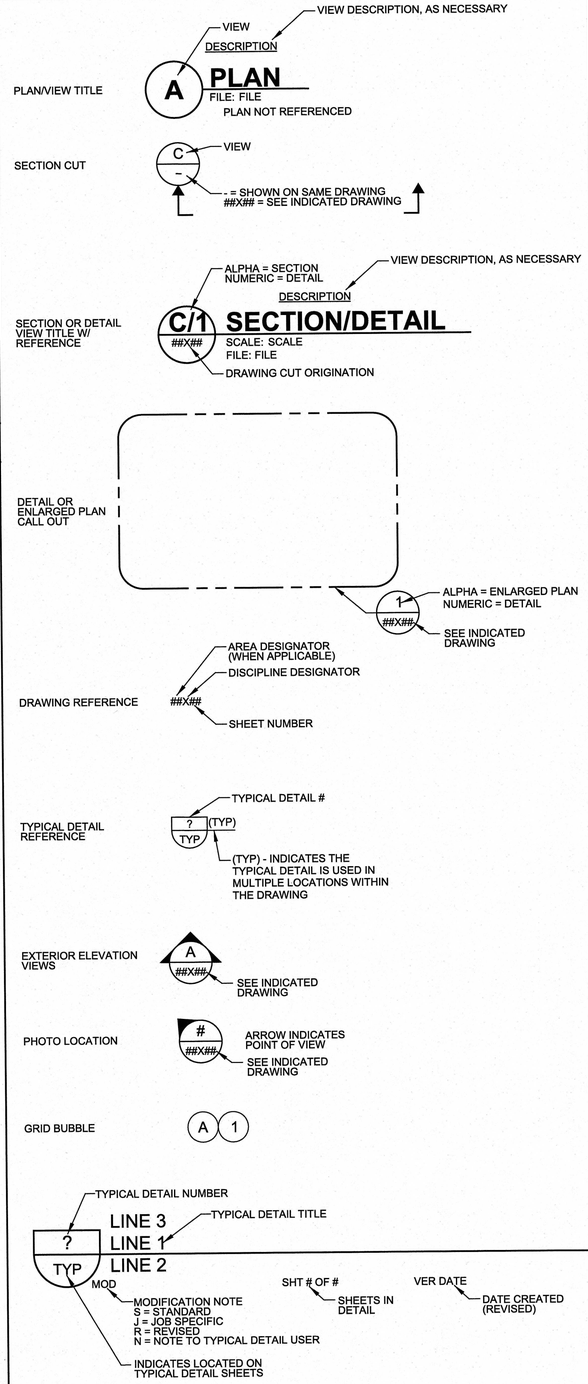

HATCH PATTERNS

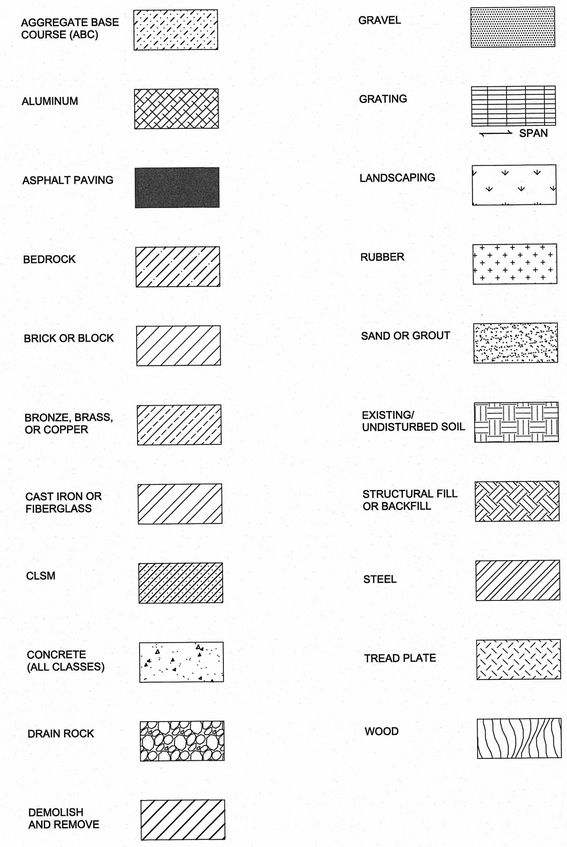

MISCELLANEOUS

REV	DATE	BY	DESCRIPTION

DESIGNED CE
DRAWN CE
CHECKED CE
DATE FEBRUARY 2023

3/20/24

carollo®
2056 VISTA PARKWAY, SUITE 400
WEST PALM BEACH, FL 33411
PHONE: 561-868-6403 FAX: 561-868-6401
CA 00008571

CITY OF STUART

WRF HEADWORKS REHABILITATION - PHASE 1

GENERAL

GENERAL NOTES, LEGEND, AND SYMBOLS

VERIFY SCALES
BAR IS ONE INCH ON ORIGINAL DRAWING
0 1"
IF NOT ONE INCH ON THIS SHEET, ADJUST SCALES ACCORDINGLY

JOB NO. 201076
DRAWING NO. G03
SHEET NO. 3 OF 29

PROJECT NO. 201076-100000 FILE NAME: 20107600G03.dgn

Plot Date: 24-FEB-2023 9:32:03 AM
User: svcPW
Model: Layout1 ColorTable: gshade.ctb DesignScript: Carollo_Std_Pen_v0905.pen PlotScale: 1:1
LAST SAVED BY: TDietz

@	AT (MEASUREMENT)	CTJ	CONTROL JOINT
△	DEFLECTION ANGLE, CENTRAL ANGLE	CTL	CONTROL
#	NUMBER (REBAR Ø)	CTR	CENTER, CENTERED
		CTSK	COUNTERSUNK
A		CU	CUBIC
AB	ANCHOR BOLT	CUP	COPPER PIPE
ABC	AGGREGATE BASE COURSE	CV	CHECK VALVE
ABS	ACRYLONITRILE BUTADIENE STYRENE	CW	COLD WATER
AC	ASPHALTIC CONCRETE	CWV	COMBINATION WASTE AND VENT
ACB	AIR CIRCUIT BREAKER	CY	CUBIC YARD
ACI	AMERICAN CONCRETE INSTITUTE		
ACP	ASBESTOS CEMENT PIPE	**D**	
ACU	AIR CONDITIONING UNIT	D	DEPTH, DIGITAL OR DISCRETE, DRAIN
AD	AREA DRAIN	D/W	DRIVEWAY
ADDL	ADDITIONAL	DBL	DOUBLE
ADJ	ADJACENT, ADJUST, ADJUSTABLE	DDR	DESICCANT DRYER
ADMIN	ADMINISTRATION	DEG or °	DEGREE
ADR	ACCESS DOOR	DEMO	DEMOLISH, DEMOLITION
AED	AREA EQUIPMENT DRAIN	DET	DETAIL
AER	AERAT(ION)(OR)	DFL	DECANT/FILTRATE
AFC	AFTERCOOLER	DG	DOOR GRILLE
AFF	ABOVE FINISHED FLOOR	DIA or Ø	DIAMETER
AFM	AIR FLOW MONITOR	DIAG	DIAGONAL
AHU	AIR HANDLING UNIT	DIF	DIFFUSER
AIC	AIR COMPRESSOR	DIG	DIGESTER
AIL	AIR INTAKE LOUVER	DIM	DIMENSION
ALT	ALTERNATE	DIP	DUCTILE IRON PIPE
AL	ALUMINUM	DISCH	DISCHARGE
ANCH	ANCHOR	DIW	DEIONIZED WATER
ANV	ANGLE VALVE	DL	DEAD LOAD, DRAIN LINE
APPROX	APPROXIMATE, APPROXIMATELY	DLV	DOOR LOUVER
ARCH	ARCHITECTURAL	DMP	DAMPER
ARV	AIR RELEASE VALVE	DMS	DIAPHRAGM SEAL
ASSY	ASSEMBLY	DN	DOWN
ASTM	AMERICAN SOCIETY FOR TESTING AND MATERIALS	do	DITTO
AV	ACID VENT	DO	DOOR OPENING
AVG	AVERAGE	DP	DEEP (OR DEPTH)
AVV	AIR AND VACUUM VALVE	DPV	DIAPHRAGM VALVE
AW	ACID WASTE	DR	DOOR, DRAIN
		DRT	DRIP TRAP
B		DRV	DRAIN VALVE
BC	BEGIN CURVE, BRASS CAP, BACK OF CURB, BOLT CIRCLE	DS	DIGESTED SLUDGE, DOWN SPOUT
BCKR	BACKER BOARD	DSW	DISTILLED WATER, DOOR SWITCH
BCM	BATCHMETER	DUC	DUST COLLECTOR
BD	BOARD	DUH	DUCT HEATER UNIT
BDD	BACKDRAFT DAMPER	DW	DISTILLED WATER
BDR	BASIN DRAIN LINE	DWD	DEWATERING DRAIN
BF	BLIND FLANGE	DWG(S)	DRAWING(S)
BFG	BELOW FINISHED GRADE	DWL(S)	DOWEL(S)
BFP	BELT FILTER PRESS		
BFV	BUTTERFLY VALVE	**E**	
BG	BREAK GLASS HAND SWITCH	E	EAST
BKW	BACKWASH	EA	EACH
BLDG	BUILDING	EC	END OF CURVE
BLK	BLOCK	ECC RED	ECCENTRIC REDUCER
BLKHD	BULKHEAD	ECU	EVAPORATOR COOLING UNIT
BLR	PROCESS BLOWER	ED	EQUIPMENT DRAIN
BM	BEAM, BENCH MARK	EF	EXHAUST FAN, EACH FACE
BOTT	BOTTOM	EFF	EFFLUENT
BOTTS	BOTTOM SLUDGE	EG	EXHAUST GRILLE
BPV	BACK PRESSURE VALVE	EIFS	EXTERIOR INSULATION AND FINISH SYSTEM
BRG	BEARING	EJ	EXPANSION JOINT
BSP	BLACK STEEL PIPE	EJR	INJECTOR/EDUCTOR
BTU	BRITISH THERMAL UNITS	EL	ELEVATION
BTWN	BETWEEN	ELEC	ELECTRICAL
BV	BALL VALVE	ELL	ELBOW
BWCCP	BAR-WRAPPED CONCRETE CYLINDER PIPE	EMBED	EMBEDMENT
		EMH	ELECTRICAL MANHOLE
C		EP	EDGE OF PAVEMENT
C	CLOSE, CONDUIT CHANNEL (STRUCTURAL)	EPS	EXPANDED POLYSTYRENE
CA	CONCRETE ANCHOR	EPV	ECCENTRIC PLUG VALVE
CAUSTIC	CAUSTIC SOLUTION (CONCENTRATED OR DILUTE)	EQ	EQUAL
CB	CATCH BASIN	EQUIP	EQUIPMENT
CC	CENTER OF CURVATURE, CENTER TO CENTER	ER	EXHAUST REGISTER
CCB	CHLORINE CONTACT BASIN	ES	EACH SIDE
CD	CEILING DIFFUSER, CONDENSATE DRAIN	ESEW	EMERGENCY SHOWER AND EYE WASH
CDL	CHEMICAL DRAIN LINE	ESS	EMERGENCY HAND SWITCH
CDT	CONDUIT	ET	ELECTRICALLY HEAT TRACED
CEF	CEILING EXHAUST FAN	EUH	ELECTRIC UNIT HEATER
CF	CUBIC FEET	EVR	EVAPORATOR
CFM	CUBIC FEET PER MINUTE	EW	EACH WAY
CFS	CUBIC FEET PER SECOND	EWC	ELECTRIC WATER COOLER
CHEMD	CHEMICAL DRAIN	EWEF	EACH WAY EACH FACE
CHF	CHEMICAL FEEDER	EWH	ELECTRIC WATER HEATER, EXHAUST
CHKD PL	CHECKERED PLATE	EX	EXISTING
CI	CAST IRON	EXIST	EXISTING
CIP	CAST IRON PIPE	EXP	EXPANSION, EXPANSION TANK
CIRC	CIRCUMFERENTIAL/CIRCUMFERENCE	EXPO	EXPOSED
CJ	CONSTRUCTION JOINT	EXT	EXTERIOR
CKA	CHECK VALVE, ANGLE		
CKB	CHECK VALVE, BALL	**F**	
CKF	CHECK VALVE, FLAP	FACT	FACTORY
CKS	CHECK VALVE, SWING	FAD	FOUL AIR DUCT
CL	CENTER LINE	FB	FLAT BAR
CLK	CHAIN LINK	FBW	FILTER BACKWASH
CLD	CHLORINE LEAK DETECTOR	FC	FACE OF CURB, FLEXIBLE COUPLING
CLL	CHLORINE LIQUID	FCA	FLANGE COUPLING ADAPTER
CLP	CHLORINE GAS (PRESSURE)	FCO	FLOOR CLEANOUT
CLR	CLEAR	FCU	FAN COIL UNIT
CLS	CHLORINE SOLUTION	FD	FIRE DAMPER, FLOOR DRAIN, FOUND
CLSM	CONTROLLED LOW STRENGTH MATERIAL	FDC	FIRE DEPARTMENT CONNECTION
CLV	CHLORINE GAS (VACUUM)	FDL	FLOOR DRAIN LINE
CML	CEMENT MORTAR LINED	FDR	FEEDER
CMLC	CEMENT MORTAR LINED AND COATED	FEFF	FINAL EFFLUENT
CMP	CORRUGATED METAL PIPE	FG	FLAP GATE
CMU	CONCRETE MASONRY UNIT	FH	FIRE HYDRANT
CNV	CONVEYOR	FILT	FILTRATE
CO	CLEANOUT	FIN	FINISH
COL(S)	COLUMN(S)	FIN FL	FINISHED FLOOR
CONC	CONCRETE	FIN GR	FINISHED GRADE
CONN	CONNECT, CONNECTION	FL	FLOOR, FLOW LINE
CONST	CONSTRUCTION	FLA	FOUL AIR
CONT	CONTINUOUS OR CONTINUATION OR (D) (OUS)	FLD	FILTER DRAIN
CORR	CORRUGATE(D), CORROSION	FLE	FILTER EFFLUENT
CP	CONTROL POINT	FLEX	FLEXIBLE
CPLG	COUPLING	FLG	FLANGE, OR FLANGED
CPT	CARPET	FLR	FILTER
CPVC	CHLORINATED POLYVINYL CHLORIDE	FM	FORCE MAIN
CS	CARBON STEEL, CIRCULATING SLUDGE	FND	FOUNDATION
CSP	CHEMICAL SUMP PUMP, CORRUGATED STEEL PIPE	FO	FUEL OIL
CT	CURRENT TRANSFORMER, CERAMIC TILE	FOB	FLAT ON BOTTOM
		FOT	FLAT ON TOP

FPM	FEET PER MINUTE	MC	MECHANICAL COUPLING
FPP	FLEXIBLE PLASTIC PIPE	MCJ	MASONRY CONTROL JOINT
FRP	FIBERGLASS REINFORCED PLASTIC	MD	MOTORIZED DAMPER
FRPP	FIBERGLASS REINFORCED PLASTIC PIPE	MECH	MECHANICAL
FRS	FROTH SPRAY	MET	METAL
FS	FAR SIDE	MFR	MANUFACTURER
FSTN	FASTEN(ED)	MG/L	MILLIGRAMS PER LITER
FT or '	FOOT, FEET	MGD	MILLION GALLONS PER DAY
FTG	FOOTING	MH	MANHOLE
FUP	FUEL DISPENSER	MIN	MINIMUM
FV	FLAP VALVE	MISC	MISCELLANEOUS
FW	FLUSHING WATER, FINISHED WATER	MIX	MIXER
FX	FIRE EXTINGUISHER	MJ	MECHANICAL JOINT
FXC	FIRE EXTINGUISHER CABINET	MK	MARK
FXE	FIRE EXTINGUISHER - ELECTRICAL	ML	MIXED LIQUOR
		MO	MASONRY OPENING
G		MOD	MODIFIED
G	GAS, GROUND, GUTTER	MOIST	MOISTURE
GA	GAUGE or GAGE	MON	MONUMENT
GAL	GALLONS	MOS	MOISTURE SEPARATOR
GALV	GALVANIZE(D)	MPM	METERING PUMP
GAV	GRAVITY VENTILATOR	MS	MOP SINK
GB	GRADE BREAK	MTD	MOUNTED
GBT	GRAVITY BELT THICKENER		
GC	GROOVED COUPLING	**N**	
GEL	GRAVITY EXHAUST LOUVER	N	NORTH, NEUTRAL
GEN	GENERAL, GENERATOR	NA	NOT APPLICABLE
GL	GLASS	NC	NORMALLY CLOSED
GLV	GLOBE VALVE	NEV	VALVE, NEEDLE
GM	GAS METER	NG	NATURAL GRADE, NATURAL OR LP GAS
GND	GROUND	NIC	NOT IN CONTRACT
GPD	GALLONS PER DAY	NO., #	NUMBER
GPM	GALLONS PER MINUTE	NOM	NOMINAL
GR	GRADE	NPT	NATIONAL PIPE THREAD
GRTG	GRATING	NPW	NON-POTABLE WATER
GRV	GRAVITY VENTILATOR	NS	NEAR SIDE
GSP	GALVANIZED STEEL PIPE	NTS	NOT TO SCALE
GV	GATE VALVE		
GYP	GYPSUM	**O**	
		O	OPEN
H		OBD	OPPOSED BLADE DAMPER
H	EXPLOSION-PROOF, HIGH, HORIZONTAL	OC	ON CENTER
H1E	HOOK ONE END	OD	OUTSIDE DIAMETER, OUTSIDE DIMENSION
H2E	HOOK TWO ENDS	OED	OPEN EQUIPMENT DRAIN
HAS	HEADED ANCHOR STUD	O.F.	OUTSIDE FACE
HB	HOSE BIBB	OFL	OVERFLOW
HDPE	HIGH DENSITY POLYETHYLENE	OPNG	OPENING
HDW	HARDWARE	OPP	OPPOSITE
HDWL	HEADWALL	OPP HND	OPPOSITE HAND
HEF	HOOD EXHAUST FAN	OZ	OUNCE
HGT	HEIGHT		
HORIZ	HORIZONTAL	**P**	
HP	HEAT PUMP, HORSEPOWER, HIGH PRESSURE	P	POLE
HPA	HIGH PRESSURE AIR	PBL	POLYMER BLENDER
HPT	HIGH POINT	PC	POINT OF CURVATURE
HPU	HEAT PUMP UNIT AIR	PCC	PLANT CONTROL CENTER
HR	HANDRAIL, HOSE REEL, HOUR	PCCP	PRESTRESSED CONCRETE CYLINDER PIPE
HSF	HOOD SUPPLY FAN	PCP	PROGRESSIVE CAVITY PUMP
HSS	HOLLOW STRUCTURAL SECTION (STEEL)	PD	POSITIVE DISPLACEMENT, PLANT DRAIN
HTX	HEAT EXCHANGER	PD, PLD	PULSATION DAMPENER
HV	HOSE VALVE	PDP	POSITIVE DISPLACEMENT PUMP
HW	HOT WATER	PE	PLAIN END
HWL	HIGH WATER LEVEL	PERP	PERPENDICULAR
HWR	HOT WATER RETURN	PG	PRESSURE GAUGE
HWS	HOT WATER SUPPLY	PH	PHASE, PHYSICALLY HANDICAPPED
HxW	HEIGHT BY WIDTH	PI	POINT OF INTERSECTION
HYD	HYDRANT	PIV	POST INDICATOR VALVE
		PL	PLATE, PROPERTY LINE
I		PLAS	PLASTIC
IA	INSTRUMENT AIR	PLCS	PLACES
ID	INSIDE DIAMETER, INSIDE DIMENSION, IDENTIFICATION	PLS	POLYMER SOLUTION
I.F.	INSIDE FACE	PLWD	PLYWOOD
IN or "	INCHES	PMP	PUMP
INCL	INCLUDE, INCLUDING	PNL(S)	PANEL(S)
INF	INFLUENT	POL	POLYMER
INJ	INJECTOR	POLY	POLYETHYLENE
INSTR	INSTRUMENTATION	POS	POSITION
INSUL	INSULAT(E)(ED)(ING)(ION)	POW	POTABLE WATER
INT	INTERIOR	PP	POWER POLE
INV	INVERT	PPMV	PARTS PER MILLION (VOLUME)
IP	IRON PIPE	PRC	POINT OF REVERSE CURVATURE
ISR	INTRINSICALLY SAFE RELAY	PREFAB	PREFABRICATED
		PRG	PRESSURE REGULATOR
J		PRI	PRIMARY
JST	JOIST	PROJ	PROJECTION
JT	JOINT	PRR	PRESSURE OR VACUUM RELIEF VALVE
		PRV	PRESSURE REDUCING VALVE, PRESSURE REGULATION VALVE, PRESSURE RELIEF VALVE
K		PS	PUMP STATION, PIPE SUPPORT
KGV	KNIFE GATE VALVE	PSF	POUNDS PER SQUARE FOOT
		PSG	PRESSURE GAUGE
L		PSI	POUNDS PER SQUARE INCH
L	ANGLE (STRUCTURAL), LENGTH, LOUVER	PSIG	POUNDS PER SQUARE INCH GAUGE
LAB	LABORATORY	PT	POINT, POINT OF TANGENCY
LAV	LAVATORY	PV	PLUG VALVE
LB(S)	POUND(S)	PVC	POINT OF VERTICAL CURVATURE, POLYVINYL CHLORIDE
LDF	LIQUID DIESEL FUEL	PVDF	POLYVINYLIDENE FLUORIDE
LDFR	LIQUID DIESEL FUEL RETURN	PVI	POINT OF VERTICAL INTERSECTION
LF	LINEAL FEET	PVMT	PAVEMENT
LG	LONG	PVT	POINT OF VERTICAL TANGENCY
LH	LEFT HAND	PLW	PLANT WATER
LHR	LEFT HAND REVERSE		
LHRA	LEFT HAND REVERSE ACTIVE	**Q**	
LHRB	LEFT HAND REVERSE BEVEL	QTY	QUANTITY
LL	LIVE LOAD		
LLH	LONG LEG HORIZONTAL	**R**	
LLV	LONG LEG VERTICAL	R/W	RIGHT OF WAY
LP	LOW PRESSURE	RAD	RADIUS, RADIAL
LPA	LOW PRESSURE AIR	RAS	RETURN ACTIVATED SLUDGE
LPG	LIQUIFIED PROPANE GAS	RCP	REINFORCED CONCRETE PIPE
LPT	LOW POINT	RCCP	REINFORCED CONCRETE CYLINDER PIPE
LR	LONG RADIUS	RD	ROOF DRAIN
LS	LAB SINK	RDL	ROOF DRAIN LINE
LT	LEFT	RDOF	ROOF DRAIN OVERFLOW
LWL	LOW WATER LEVEL	RECIRC	RECIRCULATING
		RED	REDUCER, ROOF EQUIPMENT DRAIN
M		REF	REFERENCE
M	MOTOR	REG	REGULATOR, REGULATING
MAINT	MAINTENANCE	REINF	REINFORCE(D)(ING)(MENT)
MAN	MANUAL	REJ	RUBBER EXPANSION JOINT
MASY	MASONRY	REQD	REQUIRED
MATL	MATERIAL	RER	REACTOR
MAU	MAKE-UP AIR UNIT	RES	RESERVOIR
MAX	MAXIMUM	REV	REVISION, REVERSE
MB	MACHINE BOLT	RF	RETURN FAN
		RG	RETURN GRILLE RUBBER GASKET
		RH	RIGHT HAND
		RHR	RIGHT HAND REVERSE
		RHRA	RIGHT HAND REVERSE ACTIVE
		RHRB	RIGHT HAND REVERSE BEVEL
		RLS	REGISTERED LAND SURVEYOR
		RM	ROOM
		RO	ROUGH OPENING
		ROT	ROTAMETER
		RP	RADIUS POINT
		RPM	REVOLUTIONS PER MINUTE
		RPMP	REINFORCED PLASTIC MORTAR PIPE
		RR	RETURN REGISTER
		RSR	RISER
		RT	RIGHT
		RTF	ROTARY FEEDER
		RTU	ROOF TOP UNIT
		RUD	RUPTURE DISK
		RW	RECLAIMED WATER, REUSE WATER
		RWR	RECLAIMED WATER RETURN
		RWW	RAW WASTEWATER
		S	
		S/W	SIDEWALK
		S	SOUTH, SWITCH, SLOPE
		SA	SAMPLE
		SC	SECONDARY CLARIFIER
		SCB	SCRUBBER
		SCD	SMOKE CONTROL DAMPER
		SCFM	STANDARD CUBIC FEET PER MINUTE
		SCH	SCHEDULE
		SCO	SURFACE CLEANOUT
		SCR	BAR SCREEN
		SCR	SILICON CONTROL RECTIFIER
		SD	SMOKE DETECTOR, SPLITTER DAMPER, STORM DRAIN
		SDL	SUMP DISCHARGE DRAIN LINE
		SDO	SLUDGE DRAWOFF
		SE	SECONDARY EFFLUENT
		SEC	SECONDARY, SECOND
		SECT	SECTION
		SED	SEDIMENTATION
		SEP	SEPTAGE
		SF	SUPPLY FAN
		SFW	SOFTENED WATER
		SG	SUPPLY GRILLE
		SGS	STORE FRONT GLAZING SYSTEM
		SHD	SHOWER DRAIN
		SHDR	SOLIDS HANDLING-RECYCLE
		SHR	SHOWER
		SHT	SHEET
		SIM	SIMILAR
		SK	SKIMMINGS
		SL	SLOPE, SLUDGE
		SLC	SLUDGE COLLECTOR DRIVE
		SLG	SLIDE GATE
		SLV	SLEEVE VALVE
		SMP	SAMPLER, SUMP PUMP
		SN	SUPERNATANT OR SUBNATANT
		SOL	SOLUTION
		SP	STATIC PRESSURE, SET POINT
		SPD	SUMP PUMP DRAIN
		SPDT	SINGLE POLE DOUBLE THROW
		SPEC(S)	SPECIFICATION(S)
		SPL	SPLITTER BOX
		SPR	SPARE
		SPS	SAMPLE SINK
		SPW	SAMPLE WATER
		SQ	SQUARE
		SQ FT	SQUARE FEET
		SQ IN(S)	SQUARE INCH(ES)
		SR	SHORT RADIUS, SUPPLY REGISTER
		SRL	SCRUBBER RECIRCULATION LIQUID (CAUSTIC)
		SS	SANITARY SEWER, SELECTOR SWITCH
		SSK	SERVICE SINK
		SSL	SECONDARY SLUDGE
		SST	STAINLESS STEEL
		ST	SLUDGE TRANSFER
		STA	STATION
		STB	STABILIZER
		STD(S)	STANDARDS(S)
		STIFF	STIFFENER
		STIR	STIRRUPS
		STL	STEEL
		STM	STEAM
		STP	STEEL PIPE
		STR	STRAINER
		STRUCT	STRUCTURAL
		SUG	SLUICE GATE
		SUPT	PIPE SUPPORT, SUPPORT
		SV	SERVICE VALVE, SHUTOFF VALVE, SOLENOID VALVE
		SW	SANITARY WASTE
		SWR	SEAL WATER
		SYM	SYMMETRICAL
		SYN	SYNTHETIC
		T	
		T	TANGENT LENGTH, THERMOSTAT, TIMER
		T&B	TOP AND BOTTOM
		TAS	THREADED ANCHOR STUD
		TBM	TEMPORARY BENCHMARK
		TC	TOP OF CURB
		TCV	TEMPERATURE CONTROL VALVE
		TDH	TOTAL DYNAMIC HEAD
		TDR	TIME DELAY RELAY, TOWEL DISPENSER/RECEPTACLE
		TEL	TELEPHONE
		TH	TEST HOLE
		THK	THICKENER, THICKNESS, THICK
		TKS	THICKENED SLUDGE
		TLV	TELESCOPING VALVE
		TMH	TELEPHONE MANHOLE
		TMP	TEMPERATURE
		TNK	TANK
		T.O.	TOP OF
		TOC	TOP OF CONCRETE
		TOG	TOP OF GRATING
		TOM	TOP OF MASONRY
		TOS	TOP OF STEEL
		T.O.W.	TOP OF WALL
		TR	TRIAD (THREE CONDUCTOR SHIELDED CABLE), TIMING RELAY
		TRD	TREAD
		TS	THICKENER SUPERNATANT OR SUBNATANT
		TSD	THICKENED SLUDGE DECANT
		TSPL	TURBIDIMETER SAMPLE
		TSTAT	THERMOSTAT
		TTB	TELEPHONE TERMINAL BOARD
		TUR	TURBINE
		TV	TURNING VANES
		TWV	THREE-WAY VALVE
		TYP	TYPICAL
		U	
		UC	UNDERCUT
		UG	UNDERGROUND
		UHMWPE	ULTRA HIGH MOLECULAR WEIGHT POLYETHYLENE
		UHMW	ULTRA HIGH MOLECULAR WEIGHT
		UNO	UNLESS NOTED OTHERWISE
		US	UTILITY SINK
		V	
		V	VALVE
		VAR	VARIES
		VB	VALVE BOX
		VCP	VITRIFIED CLAY PIPE
		VEC	VINYL ESTER COATING
		VERT	VERTICAL
		VFR	VOLUMETRIC FEEDER
		VG	VACUUM GAUGE, VALLEY GUTTER
		VOL	VOLUME
		VRV	VACUUM REGULATING VALVE
		VTR	VENT THROUGH ROOF
		W	
		W	WEST, WIDTH
		W/	WITH
		W/O	WITHOUT
		WAS	WASTE ACTIVATED SLUDGE
		WCO	WALL CLEANOUT
		WEF	WALL EXHAUST FAN
		WF	WALL FITTING, WASH FOUNTAIN
		WH	WATER HEATER
		WI	WEIGHT INDICATOR
		WL	WALL LOUVER, WATER LEVEL
		WM	WATER METER
		WOD	WASTE OIL DRAIN
		WP	WEATHERPROOF, WATERPROOF
		WPT	WORKING POINT
		WRG	WEIR GATE
		WRS	WATER SOFTENER
		WS	WATER SURFACE
		WSTP	WATERSTOP
		WT	WALK THROUGH, WEIGHT
		WTF	WATER TREATMENT FACILITY
		WTP	WATER TREATMENT PLANT
		WTR	WATER
		WV	WATER CONTROL VALVE
		WW	WASTEWATER
		WWF	WELDED WIRE FABRIC
		WWTF	WASTEWATER TREATMENT FACILITY
		WWTP	WASTEWATER TREATMENT PLANT
		Y	
		Y	WYE
		YCO	YARD CLEANOUT
		YH	YARD HYDRANT

REV	DATE	BY	DESCRIPTION

DESIGNED CE
DRAWN CE
CHECKED CE
DATE FEBRUARY 2023

3/26/24

carollo®
2056 VISTA PARKWAY, SUITE 400
WEST PALM BEACH, FL 33411
PHONE: 561-868-6403 FAX: 561-868-6401
CA 00008571

CITY OF STUART

WRF HEADWORKS REHABILITATION - PHASE 1

GENERAL

GENERAL ABBREVIATIONS

VERIFY SCALES
BAR IS ONE INCH ON ORIGINAL DRAWING
0 1"
IF NOT ONE INCH ON THIS SHEET, ADJUST SCALES ACCORDINGLY

JOB NO. 201076
DRAWING NO. G04
SHEET NO. 4 OF 29

PROJECT NO. 201076-100000 FILE NAME: 20107600G04.dgn

Plot Date: 24-FEB-2023 9:31:55 AM
User: svcPW
PlotScale: 1:1
DesignScript: Carollo_Std_Pen_v0905.pen
ColorTable: gshade.ctb
Model: Layout1
LAST SAVED BY: TDietz

Plot Date: 01-APR-2024 11:06:06 AM
User: svcPW
Model: Layout1 ColorTable: gshade.ctb DesignScript: Carollo_Std_Pen_v0905.pen PlotScale: 1:1
LAST SAVED BY: TDletz

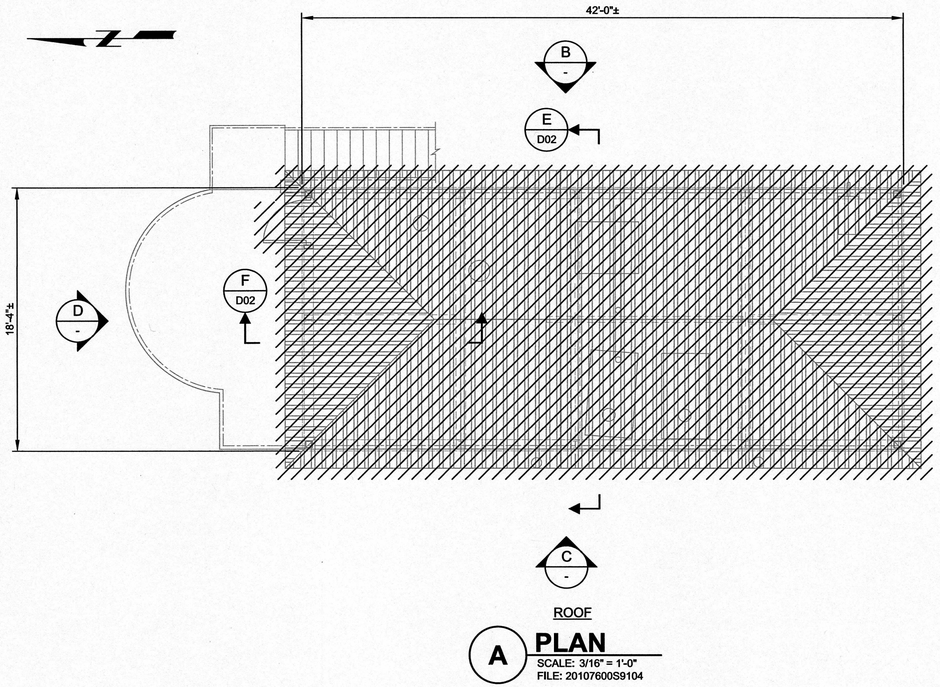

ROOF

A PLAN
SCALE: 3/16" = 1'-0"
FILE: 20107600S9104

GENERAL NOTES:

1. FOR GENERAL STRUCTURAL NOTES SEE DRAWING S01.
2. EXISTING CONDITIONS:
   A. FIELD VERIFY ALL EXISTING DIMENSIONS ELEVATIONS AND CONDITIONS PRIOR TO DEMOLITION.

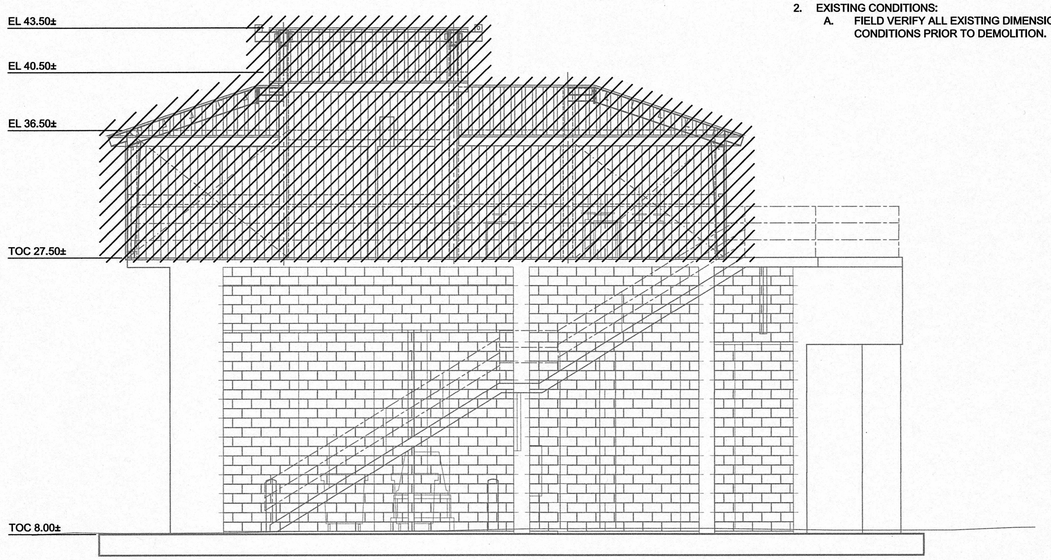

EAST

B ELEVATION
SCALE: 3/16" = 1'-0"
FILE: 20107600S9308

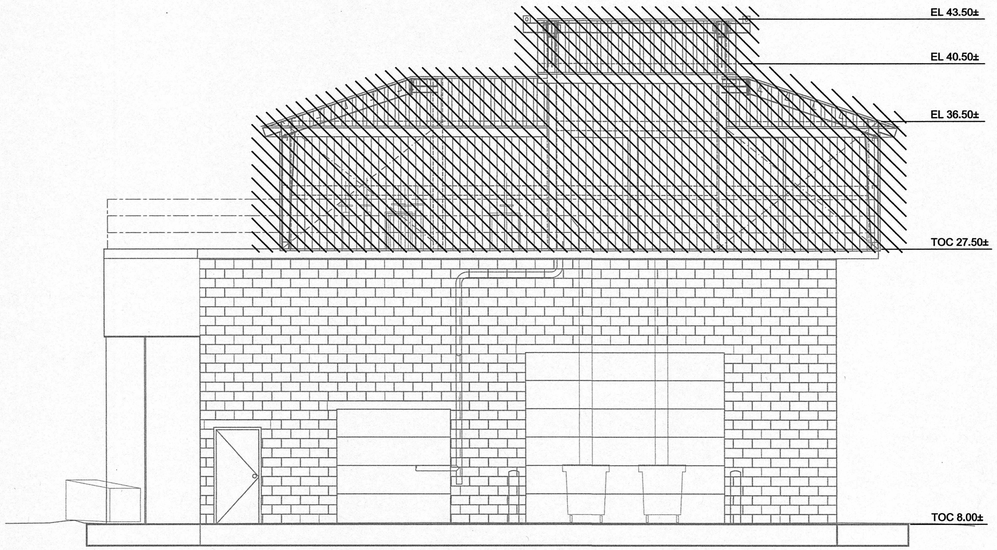

WEST

C ELEVATION
SCALE: 3/16" = 1'-0"
FILE: 20107600S9309

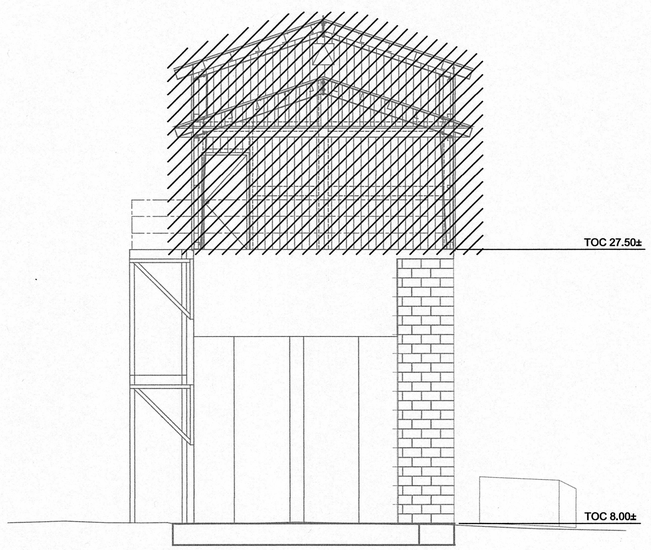

NORTH

D ELEVATION
SCALE: 3/16" = 1'-0"
FILE: 20107600S9310

REV	DATE	BY	DESCRIPTION

DESIGNED AVM
DRAWN TJD
CHECKED VC
DATE FEBRUARY 2023

C.T. REINBOLD LICENSE No 68639 STATE OF FLORIDA PROFESSIONAL ENGINEER 4/02/24

carollo®
2056 VISTA PARKWAY, SUITE 400
WEST PALM BEACH, FL 33411
PHONE: 561-868-6403 FAX: 561-868-6401
CA 00008571

CITY OF STUART

WRF HEADWORKS REHABILITATION - PHASE 1

DEMOLITION

HEADWORKS METAL BUILDING PLAN AND ELEVATIONS

VERIFY SCALES
BAR IS ONE INCH ON ORIGINAL DRAWING
0 1"
IF NOT ONE INCH ON THIS SHEET, ADJUST SCALES ACCORDINGLY

JOB NO. 201076
DRAWING NO. D01
SHEET NO. 5 OF 29

PROJECT NO. 201076-100000 FILE NAME: 20107600D01.dgn

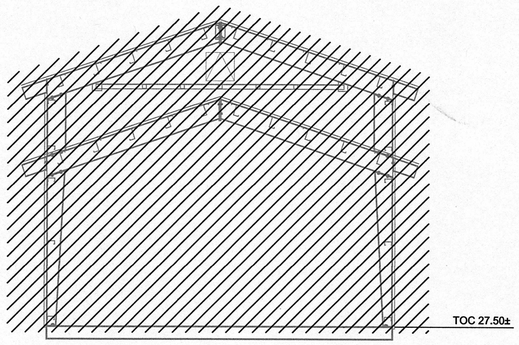

E SECTION
D01
SCALE: 1/4" = 1'-0"
FILE: 20107600S9306

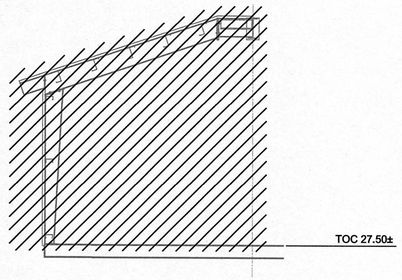

F SECTION
D01
SCALE: 1/4" = 1'-0"
FILE: 20107600S9307

GENERAL NOTES:

1. FOR GENERAL STRUCTURAL NOTES SEE DRAWING S01.
2. EXISTING CONDITIONS:
   A. FIELD VERIFY ALL EXISTING DIMENSIONS ELEVATIONS AND CONDITIONS PRIOR TO DEMOLITION.

REV	DATE	BY	DESCRIPTION

DESIGNED AVM
DRAWN TJD
CHECKED VC
DATE FEBRUARY 2023

C.T. REINBOLD LICENSE No 68639 STATE OF FLORIDA PROFESSIONAL ENGINEER

carollo
2056 VISTA PARKWAY, SUITE 400
WEST PALM BEACH, FL 33411
PHONE: 561-868-6403 FAX: 561-868-6401
CA 00008571

CITY OF STUART · FLORIDA · INCORPORATED 1914 · HEART OF THE TREASURE COAST · CAPITAL OF THE WORLD

CITY OF STUART
WRF HEADWORKS REHABILITATION - PHASE 1
DEMOLITION
HEADWORKS METAL BUILDING SECTIONS

VERIFY SCALES
BAR IS ONE INCH ON ORIGINAL DRAWING
0 1"
IF NOT ONE INCH ON THIS SHEET, ADJUST SCALES ACCORDINGLY

JOB NO. 201076
DRAWING NO. D02
SHEET NO. 6 OF 29

PROJECT NO. 201076-100000 FILE NAME: 20107600D02.dgn

Plot Date: 01-APR-2024 11:06:13 AM
User: svcPW
PlotScale: 1:1
DesignScript: Carollo_Std_Pen_v0905.pen
ColorTable: gshade.ctb
Model: Layout1
LAST SAVED BY: TDietz

Plot Date: 24-FEB-2023 9:35:30 AM
User: svcPW
DesignScript: Carollo_Std_Pen_v0905.pen PlotScale: 1:1
ColorTable: gshade.ctb
Model: Layout1
LAST SAVED BY: TDietz

KEY NOTES:

1. EXISTING FLOW METER TO BE SAVED AND REINSTALLED.
2. EXISTING CONTROL PANEL AND ELECTRICAL WIRING TO REMAIN IN-PLACE.

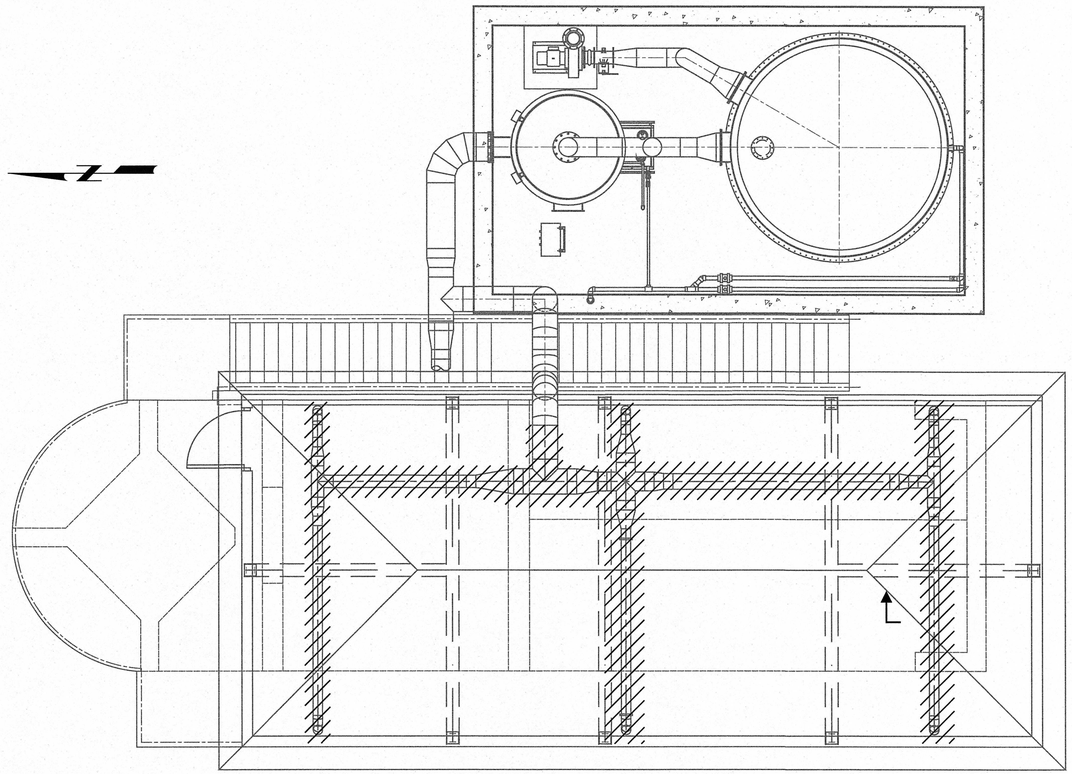

UPPER

G PLAN

SCALE: 1/4" = 1'-0"
FILE: 20107600M9102

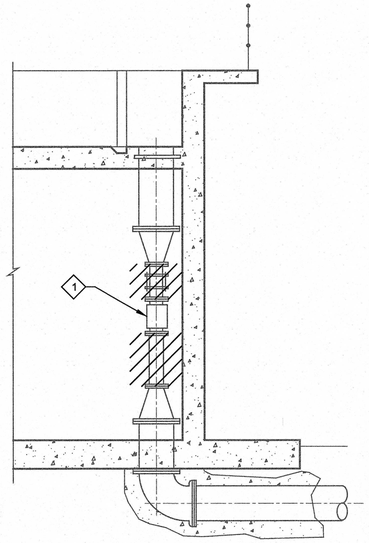

H SECTION

SCALE: 1/4" = 1'-0"
FILE: 20107600S9307



INFLUENT RISER

1 PHOTO

SCALE: NO SCALE
FILE: 20107600D01

REV	DATE	BY	DESCRIPTION

DESIGNED AVM
DRAWN TJD
CHECKED VC
DATE FEBRUARY 2023

3/28/24

carollo®
2056 VISTA PARKWAY, SUITE 400
WEST PALM BEACH, FL 33411
PHONE: 561-868-6403 FAX: 561-868-6401
CA 00008571

CITY OF STUART

WRF HEADWORKS REHABILITATION - PHASE 1

DEMOLITION

HEADWORKS
PLAN, SECTION AND DETAIL

VERIFY SCALES
BAR IS ONE INCH ON ORIGINAL DRAWING
0 1"
IF NOT ONE INCH ON THIS SHEET, ADJUST SCALES ACCORDINGLY

JOB NO. 201076
DRAWING NO. D03
SHEET NO. 7 OF 29

PROJECT NO. 201076-100000 FILE NAME: 20107600D03.dgn

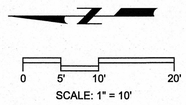

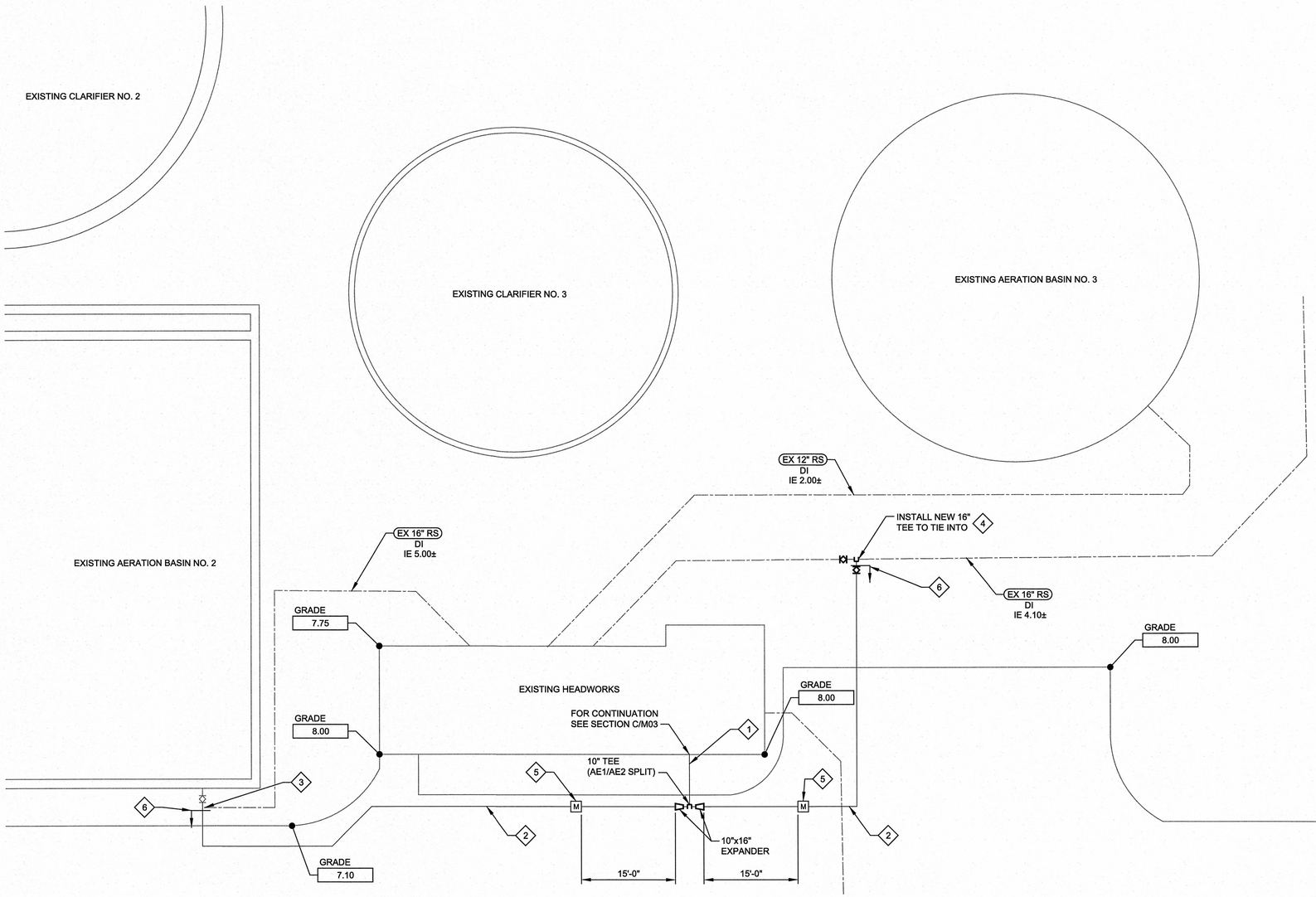

GENERAL NOTES:

1. CONTRACTOR TO FIELD VERIFY EXACT LOCATIONS OF ALL FITTINGS FOR TIE-IN CONNECTIONS.
2. ALL PIPE INVERT AND GRADE ELEVATIONS OBTAINED FROM 1992 WASTEWATER TREATMENT PLANT IMPROVEMENTS RECORD DRAWINGS.

(#) KEY NOTES:

1. ALL TEMPORARY PIPING FROM INFLUENT RISER TO AE1/AE2 SPLIT TEE SHALL BE DIP.
2. CONTRACTOR SHALL PROVIDE HDPE FOR TEMPORARY PIPING FROM AE1/AE2 SPLIT TEE TO THEIR RESPECTIVE TIE-INS. CONTRACTOR TO ENSURE ALL TEMPORARY FITTINGS AND CONNECTIONS ARE APPROPRIATE FOR INTENDED USE. PROVIDE RESTRAINED FITTINGS TO FACILITATE ASSEMLY. DRAIN, FLUSH, DISASSEMBLE, AND STORE ONSITE FOLLOWING USE IN AN AREA DESIGNATED BY THE CITY. TEMPORARY PIPE TO BECOME THE PROPERTY OF THE CITY.
3. DURING INSTALLATION OF BYPASS SYSTEM, CONTRACTOR SHALL REMOVE EXISTING 90° BEND AND STORE ON-SITE FOR DURATION OF BYPASS PUMPING. EXISTING PIPING WILL BE PLUGGED AND LEFT IN PLACE, WHILE TEMPORARY PIPING WILL TIE IN TO EXISTING PLUG VALVE TO THE WEST OF AE2. DURING DECOMMISSIONING OF BYPASS SYSTEM, CONTRACTOR SHALL REMOVE TEMPORARY PIPING AND REINSTALL EXISTING 90° BEND TO MATCH EXISTING CONDITIONS.
4. DURING DECOMMISSIONING OF BYPASS SYSTEM, CONTRACTOR SHALL REMOVE TEMPORARY PIPING AND BLIND FLANGE PLUG VALVE TO THE WEST OF NEW TEE TO ALLOW FUTURE BYPASS CONNECTIONS.
5. CONTRACTOR TO PROVIDE NEW TEMPORARY STRAP-ON ULTRASONIC FLOWMETERS FOR BYPASS PIPING ACCORDING TO SPECIFICATION SECTION 17306. CONTRACTOR TO FIELD INSTALL FLOWMETERS IN CONVENIENT LOCATIONS AS APPROVED BY THE ENGINEER. FLOWMETER SHALL READ IN GPM AND TOTALIZE FLOW.
6. NEW TEMPORARY PIPING AT GRADE. CONTRACTOR TO PROVIDE TEMPORARY SUPPORTS FOR PIPING AS REQUIRED. PIPE JOINTS TO BE PROVIDED ACCORDING TO PIPE SCHEDULE IN SPECIFICATION SECTION 15052.

REV	DATE	BY	DESCRIPTION

DESIGNED AVM
DRAWN TJD
CHECKED VC
DATE FEBRUARY 2023

3/28/24

carollo®
2056 VISTA PARKWAY, SUITE 400
WEST PALM BEACH, FL 33411
PHONE: 561-868-6403 FAX: 561-868-6401
CA 00008571

CITY OF STUART

WRF HEADWORKS REHABILITATION - PHASE 1

CIVIL

BYPASS YARD PIPING PLAN

VERIFY SCALES
BAR IS ONE INCH ON ORIGINAL DRAWING
0 1"
IF NOT ONE INCH ON THIS SHEET, ADJUST SCALES ACCORDINGLY

JOB NO. 201076
DRAWING NO. C01
SHEET NO. 8 OF 29

PROJECT NO. 201076-100000 FILE NAME: 20107600C01.dgn

GENERAL NOTES:

1. USE STRUCTURAL DRAWINGS IN CONJUNCTION WITH PROJECT DRAWINGS BY OTHER DISCIPLINES AND WITH THE SPECIFICATIONS.

2. UNLESS DETAILED, SPECIFIED, OR INDICATED OTHERWISE, CONSTRUCTION SHALL BE AS INDICATED IN THE GENERAL NOTES AND TYPICAL DETAILS.

3. PRESENTATION CONVENTIONS FOR STRUCTURAL DRAWINGS:

   A. SCREENED LINE WORK INDICATES EXISTING CONDITIONS.
   B. WRITTEN DIMENSIONS TAKE PRECEDENCE OVER SCALED SIZES.
   C. PLANS ARE TREATED AS HORIZONTAL SECTIONS. (I.E.: "PLAN AT ELEVATION 110" SHOWS CONSTRUCTION AT AND BELOW ELEVATION 110.)

4. VERIFY DIMENSIONS AND CONDITIONS BEFORE BEGINNING WORK. ADVISE ENGINEER IMMEDIATELY OF DISCREPANCIES BETWEEN EXISTING CONDITIONS AND DIMENSIONS, AND INFORMATION SHOWN ON THESE DRAWINGS. CONFIRM THE FOLLOWING BEFORE PREPARATION AND SUBMITTAL OF SHOP DRAWINGS:

   A. DIMENSIONS AND WEIGHTS FOR EQUIPMENT SELECTED.
   B. SIZES AND LOCATIONS OF EQUIPMENT PADS FOR EQUIPMENT SELECTED.

5. TYPICAL DETAILS ARE INCLUDED ON THE "TS" DRAWINGS.

   A. TYPICAL DETAILS ARE INTENDED TO APPLY AT LOCATIONS DESCRIBED BY THEIR TITLES, EVEN WHEN NOT SPECIFICALLY REFERENCED ON THE DRAWINGS.
   B. IN STRUCTURAL TYPICAL DETAILS, ORIENTATION OF BARS IN EACH MAT OF REINFORCEMENT (WHETHER "LINES" OR "DOTS"ARE CLOSER TO THE FACE OF THE CONCRETE) IS GENERALLY ARBITRARY. SEE DRAWINGS OF EACH STRUCTURE FOR ORIENTATION REQUIRED AT THAT STRUCTURE.

6. DRAWINGS PREPARED BY OTHER DISCIPLINES INCLUDE OPENINGS, ANCHORS, PIPES, CONDUITS, AND OTHER ITEMS THAT ARE EMBEDDED INTO OR PASS THROUGH STRUCTURES.

   A. CONFIRM SIZE AND LOCATIONS OF OPENINGS, PENETRATIONS AND EMBEDMENT FOR ITEMS AND EQUIPMENT FURNISHED.
   B. IN GENERAL, OPENINGS, EMBEDMENTS, AND PENETRATIONS LESS THAN 12 INCHES IN DIAMETER ARE NOT SHOWN ON THE STRUCTURAL DRAWINGS.
   C. SEE MECHANICAL DRAWINGS FOR DETAILS OF PIPE PENETRATIONS, PIPE SUPPORTS, AND ASSOCIATED STRUCTURAL REQUIREMENTS.
   D. SEE MECHANICAL DRAWINGS FOR EQUIPMENT PADS AND PIPE SUPPORTS.

STRUCTURAL DESIGN CRITERIA - GENERAL:

SEE DRAWINGS OF INDIVIDUAL STRUCTURES FOR SPECIFIC DESIGN CRITERIA BASED ON THESE OVERALL CRITERIA FOR THE SITE.

1. BUILDING CODE:

   A. 2020 FLORIDA BUILDING CODE ("FBC 2020") WITH ASCE 7-16.
   B. LOCAL AMENDMENTS: CITY OF STUART, FL.

2. STRUCTURE RISK CATEGORY: RISK CATEGORY III.

3. DEAD LOADS: CALCULATED FOR STRUCTURE SELF-WEIGHT.

4. LIVE LOADS: (REDUCTIONS NOT USED)

   A. FLOOR LIVE LOAD: SEE PLANS.
   B. GRATING AND CHECKERED PLATE: 100 PSF (UNO).
   C. ROOF LIVE LOAD: SEE PLANS (20 PSF MINIMUM).

5. FLUID PRESSURE LOADS: 63 PSF/FT (UNO).

6. SNOW LOAD DATA: NOT APPLICABLE

7. WIND DESIGN DATA:

   A. SPECIAL WIND REGION: YES - HURRICANE
   B. WIND-BORNE DEBRIS REGION: YES
   C. BASIC WIND SPEED (3 SEC GUST, 33 FEET ABOVE GROUND): 173 MPH.
   D. EXPOSURE: D

8. EARTHQUAKE DESIGN DATA: NOT APPLICABLE

9. FLOOD LOADS:

   A. FLOOD HAZARD AREA: NO
      1) REFERENCE MAP ("FIRM"): 12085C0153H
      2) COASTAL HAZARD ZONE: X

10. RAIN LOADS:

    A. DESIGN RAINFALL INTENSITY: i = 4.5 INCHES / HOUR. (100 YEAR/1 HOUR EVENT)

11. ICE LOADS: NOT APPLICABLE

12. CONSTRUCTION LOADS:
    STRUCTURES HAVE BEEN DESIGNED FOR OPERATING LOADS ON COMPLETED FACILITIES. UNTIL CONSTRUCTION IS COMPLETE AND MEMBERS HAVE ACHIEVED THEIR DESIGN STRENGTH, PROTECT STRUCTURES AS REQUIRED BY SHORING, BRACING, AND BALANCING.

GEOTECHNICAL REPORT / FOUNDATION DESIGN CRITERIA:

1. GEOTECHNICAL INVESTIGATION REPORT: NOT APPLICABLE FOR THIS REHABILITATION PROJECT.

TYPICAL STRUCTURAL MATERIALS:

1. MATERIALS SHALL CONFORM TO THE FOLLOWING REQUIREMENTS UNLESS OTHERWISE INDICATED ON THE DRAWINGS.

2. SEE PROJECT SPECIFICATIONS AND NOTES ON DRAWINGS OF SPECIFIC STRUCTURES FOR DETAILED AND LOCATION-SPECIFIC REQUIREMENTS.

REINFORCING STEEL (FOR CONCRETE REPAIR):

1. DEFORMED BARS:
   A. TYPICAL: ASTM A 615, GRADE 60.
   B. WHERE INDICATED ON THE DRAWINGS: ASTM A 706.

2. WELDED WIRE FABRIC: ASTM A 1064.

CONCRETE REPAIR MATERIAL:

1. GENERAL:
   A. PATCHING WITH SITE MIXED PORTLAND CEMENT, SAND, AGGREGATE AND WATER IS PROHIBITED FOR STRUCTURAL REPAIR.
   B. SEE DRAWING S04 AND S05 FOR SCHEDULE OF REPAIR TYPE AND APPROVED REPAIR MATERIALS. REPAIR TYPE SHALL BE FIELD DETERMINED.
   C. SUBMIT BONDING AGENT AND CONCRETE REPAIR MORTAR FOR APPROVAL.

STAINLESS STEEL:

1. ANSI TYPE 316/316L EXCEPT WHERE TYPE 304/304L IS INDICATED ON THE DRAWINGS.

2. SECTIONS: SHAPES AND BARS: ASTM A 276.

3. BOLTED CONNECTIONS - BOLTS AND ANCHOR BOLTS:

   A. MATCH ALLOY OF THE STRUCTURAL MEMBERS CONNECTED.
   B. TYPE 316/316L: ASTM F 593, GRADE B8M, CLASS 1, HEAVY HEX.
   C. TYPE 304/304L: ASTM F 593, GRADE B8, CLASS 1, HEAVY HEX.

4. WELDED CONNECTIONS:

   A. TYPE 316L: E316L-15 ELECTRODES.
   B. TYPE 304L: E304L-15 ELECTRODES.

STRUCTURAL ALUMINUM:

1. SECTIONS

   A. SHAPES: ASTM B 308, ALLOY 6061-T6.
   B. SHEET AND PLATE: ASTM B 209, ALLOY 6061-T6.

2. BOLTED CONNECTIONS - BOLTS AND ANCHOR BOLTS:

   A. STAINLESS STEEL - TYPE 316, ASTM F 593, GRADE B8M, CLASS 1, HEAVY HEX.

3. WELDED CONNECTIONS:

   A. GAS METAL ARC (MIG) OR GAS TUNGSTEN ARC (TIG) PROCESS USING FILLER ALLOY 4043 ELECTRODES.

CONSTRUCTION:

CONFORM TO THE FOLLOWING REQUIREMENTS UNLESS OTHERWISE INDICATED ON THE DRAWINGS.

EXCAVATION AND BACKFILLING:

1. EXPOSE AND PREPARE SUBGRADE AS SHOWN ON THE DRAWINGS AND SPECIFIED. OBTAIN ENGINEER'S OBSERVATION OF SUBGRADE SURFACES, AS EXPOSED AND AS PREPARED, BEFORE PROCEEDING WITH FOUNDATION CONSTRUCTION.

2. DO NOT PLACE BACKFILL AGAINST WALLS UNTIL STRUCTURES SUPPORTING THE TOP OF THE WALL ARE IN PLACE, ARE COMPLETE, AND (IN THE CASE OF CONCRETE) HAVE CURED TO THEIR MINIMUM SPECIFIED 28-DAY COMPRESSIVE STRENGTH.

3. WHERE BACKFILL MUST BE PLACED AGAINST WALLS BEFORE STRUCTURES ABOVE ARE COMPLETE, PROVIDE BRACING FOR WALLS. KEEP BRACING IN PLACE UNTIL THE STRUCTURE ABOVE IS COMPLETE AND (IN THE CASE OF CONCRETE) HAS CURED TO ITS MINIMUM SPECIFIED 28-DAY COMPRESSIVE STRENGTH.

CONCRETE:

1. SEE S101/TYP FOR CONCRETE NOTES, INCLUDING CLEAR COVER AND LAP SPLICE LENGTH REQUIREMENTS FOR REINFORCING.

5. WELDING OF REINFORCING IS NOT PERMITTED UNLESS DETAILED ON THE DRAWINGS OR ACCEPTED IN ADVANCE BY THE ENGINEER.

STEEL, STAINLESS STEEL, AND ALUMINUM - CONNECTIONS:

1. BOLTED:

   A. MADE USING 3/4-INCH DIAMETER BOLTS.
   B. HAVING A MINIMUM OF 2 BOLTS, SPACED NOT CLOSER THAN 3 INCHES ON CENTER.
   C. WITH A DISTANCE OF AT LEAST 1 1/2 INCHES FROM CENTER OF BOLT TO ANY EDGE OF A PLATE OR STRUCTURAL ELEMENT.

2. WELDED:

   A. FILLET WELDS: PER AWS CODE BASED ON THE THICKNESS OF THE MATERIALS BEING JOINED, AND FULL LENGTH OF THE JOINT.

3. INTERFACE BETWEEN MATERIALS:

   A. AT BOLTED CONNECTIONS THAT INCLUDE DIFFERENT METALS (E.G.: STEEL AND STAINLESS STEEL, OR ALUMINUM AND STEEL) PROVIDE ISOLATING SLEEVES AND WASHERS AS SPECIFIED IN SECTION 05190.
   B. WHERE ALUMINUM IS IN CONTACT WITH MASONRY OR CONCRETE, COAT ALUMINUM SURFACES AS SPECIFIED IN SECTION 09960.

4. POST-INSTALLED ANCHORS IN CONCRETE:

   A. INSTALL IN FULL COMPLIANCE WITH ACCEPTED BUILDING CODE EVALUATION REPORT AND MANUFACTURER'S INSTRUCTIONS.
   B. DO NOT CUT, DAMAGE, OR INTERRUPT EXISTING REINFORCEMENT TO INSTALL ANCHORS. USE NON-DESTRUCTIVE TESTING EQUIPMENT TO IDENTIFY LOCATIONS OF REINFORCEMENT IN MEMBERS BEFORE DRILLING HOLES FOR ANCHORS.

METAL FABRICATIONS:

1. HANDRAILS AND GUARDRAILS:

   A. ALUMINUM, EXCEPT WHERE OTHER MATERIALS ARE NOTED.

3. COVER PLATES:

   A. ALUMINUM WITH TYPE 316 STAINLESS STEEL FASTENERS, UNLESS OTHERWISE NOTED.
   B. COVER PLATE AND ITS SEATS OR SUPPORTS SHALL BE OF THE SAME MATERIAL.

STRUCTURAL SYMBOLS:

1. SEE DRAWING G03 FOR KEY TO DRAWING TITLES AND SECTION CUTS, AND FOR DEFINITION OF MATERIALS SHADING PATTERNS.

2. WELDING: SYMBOLS: IN ACCORDANCE WITH AMERICAN WELDING SOCIETY (AWS) A2.4.

STRUCTURAL ABBREVIATIONS:

1. SEE DRAWING G04 FOR GENERAL LIST OF ABBREVIATIONS USED ON DRAWINGS.

2. ABBREVIATIONS FOR NAMES OF TECHNICAL GROUPS MAY BE FOUND IN THE PROJECT SPECIFICATIONS.

3. STRUCTURAL MEMBERS:

   A. STEEL: ABBREVIATIONS AND DESIGNATIONS ARE IN ACCORDANCE WITH THE AMERICAN INSTITUTE OF STEEL CONSTRUCTION'S STEEL CONSTRUCTION MANUAL, CURRENT EDITION.

   B. ALUMINUM: ABBREVIATIONS AND DESIGNATIONS ARE IN ACCORDANCE WITH THE ALUMINUM ASSOCIATION'S ALUMINUM DESIGN MANUAL, CURRENT EDITION.

4. ABBREVIATIONS FOR STRUCTURAL DRAWINGS:
   WHEN USED ON THE STRUCTURAL DRAWINGS, THE FOLLOWING ABBREVIATIONS HAVE THE MEANINGS LISTED.

REINFORCEMENT:		OTHER:	
BO	BOTTOM OF	L	ANGLE
EF	EACH FACE	PL	PLATE
I.F.	INSIDE FACE		
O.F.	OUTSIDE FACE		
T.O.	TOP OF		
#	NUMBER (REINFORCING BAR SIZE)		

DEFERRED DESIGN SUBMITTALS

AS DEFINED IN THE BUILDING CODE, DEFERRED DESIGN SUBMITTALS ARE PORTIONS OF THE DESIGN THAT ARE NOT SUBMITTED AT THE TIME OF PERMIT APPLICATION, AND THAT ARE TO BE REVIEWED BY THE REGISTERED DESIGN PROFESSIONAL AND SUBSEQUENTLY SUBMITTED TO THE BUILDING OFFICIAL.

DEFERRED DESIGN SUBMITTALS FOR THIS PROJECT INCLUDE:

1. DIVISION 5(05) METALS.

   A. 05500 HANDRAILS AND GUARDRAILS.

2. DIVISION 13 SPECIAL CONSTRUCTION.

   A. 13122 METAL BUILDING SYSTEM.

REV	DATE	BY	DESCRIPTION

DESIGNED CE
DRAWN CE
CHECKED CE
DATE FEBRUARY 2023

RICHARD C. WARNER LICENSE No 79572 STATE OF FLORIDA PROFESSIONAL ENGINEER

THIS ITEM HAS BEEN DIGITALLY SIGNED AND SEALED BY RICHARD C. WARNER ON THE DATE ADJACENT TO THE SEAL.

PRINTED COPIES OF THIS DOCUMENT ARE NOT CONSIDERED SIGNED AND SEALED AND THE SIGNATURE MUST BE VERIFIED ON ANY ELECTRONIC COPIES.

RICHARD C. WARNER LICENSE No. 79572 STATE OF FLORIDA PROFESSIONAL ENGINEER
1/12/2024

carollo®
2056 VISTA PARKWAY, SUITE 400
WEST PALM BEACH, FL 33411
PHONE: 561-868-6403 FAX: 561-868-6401
CA 00008571

CITY OF STUART, FLORIDA, INCORPORATED 1914, SWIFTEST CAPITAL OF THE WORLD

CITY OF STUART

WRF HEADWORKS REHABILITATION - PHASE 1

GENERAL

STRUCTURAL NOTES

VERIFY SCALES
BAR IS ONE INCH ON ORIGINAL DRAWING
0 1"
IF NOT ONE INCH ON THIS SHEET, ADJUST SCALES ACCORDINGLY

JOB NO. 201076
DRAWING NO. S01
SHEET NO. 9 OF 29

PROJECT NO. 201076-100000 FILE NAME: 20107600S01.dgn

Plot Date: 24-FEB-2023 9:46:30 AM
User: svcPW
PlotScale: 1:1
DesignScript: Carollo_Std_Pen_v0905.pen
ColorTable: gshade.ctb
Model: Layout1
LAST SAVED BY: TDietz

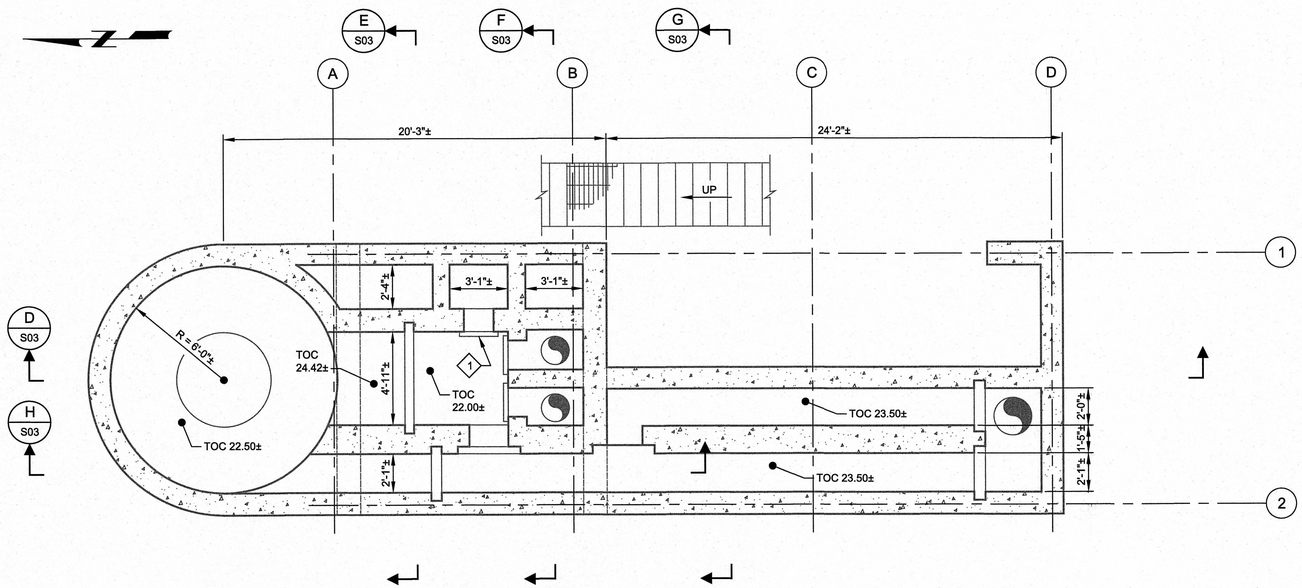

INTERMEDIATE

A PLAN

SCALE: 1/4" = 1'-0"
FILE: 20107600S9102

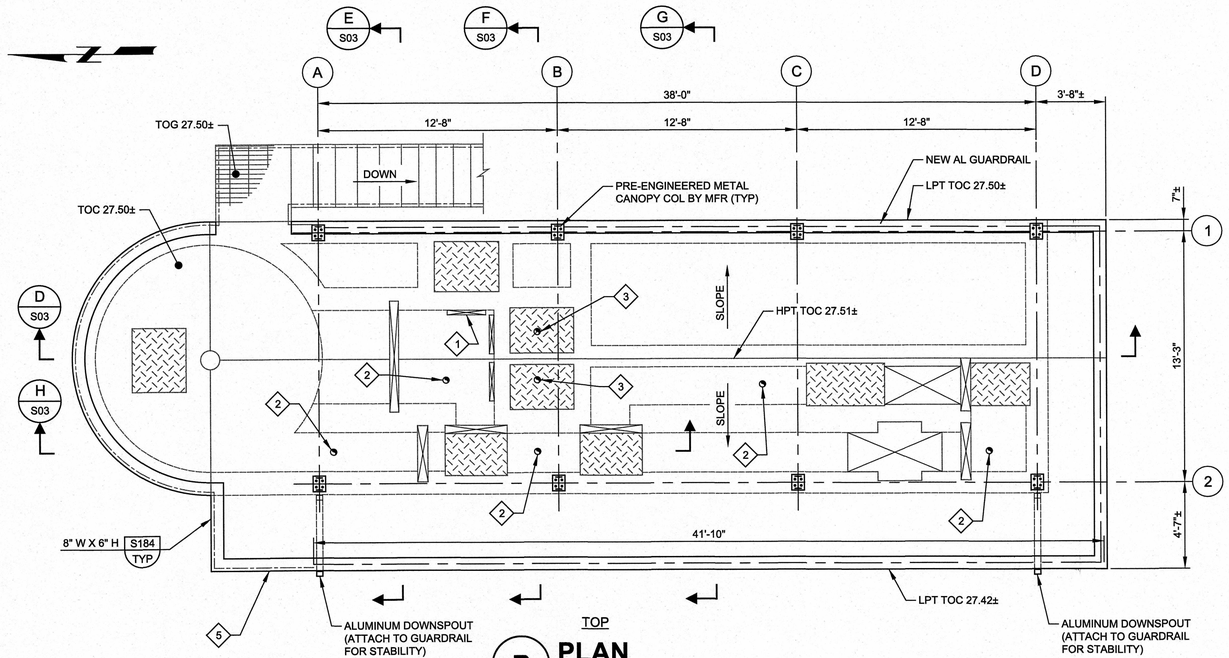

TOP

B PLAN

SCALE: 1/4" = 1'-0"
FILE: 20107600S9103

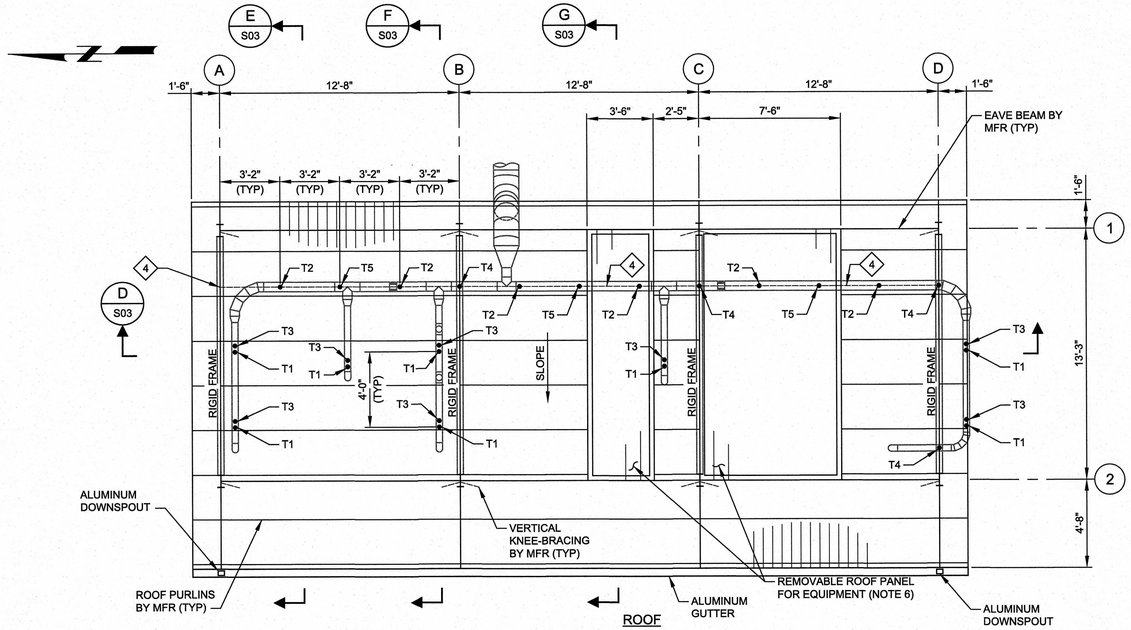

ROOF

C PLAN

SCALE: 1/4" = 1'-0"
FILE: 20107600S9103

GENERAL NOTES:

1. FOR GENERAL STRUCTURAL NOTES SEE DRAWING S01.
2. EXISTING CONDITIONS
   A. FIELD VERIFY ALL EXISTING DIMENSIONS, ELEVATIONS, AND CONDITIONS PRIOR TO DEMOLITION, SHOP DRAWING PREPARATION AND FABRICATION.
3. FOR CONCRETE REPAIR DETAILS AND REQUIREMENTS SEE DRAWINGS S05 AND S06 AND REFER TO SPECIFICATION SECTION 03926.
4. FOR PRE-ENGINEERED METAL CANOPY REQUIREMENTS REFER TO SPECIFICATION SECTION 13122.
5. T# INDICATES ODOR CONTROL PIPE SUPPORT TYPE. FOR SUPPORT DETAILS SEE DRAWING S04.
6. CONTRACTOR TO CONFIRM WIDTH OF REMOVABLE ROOF PANELS BASED ON EQUIPMENT DIMENSIONS. COORDINATE FINAL PANEL DIMENSIONS WITH PRE-ENGINEERED METAL CANOPY MANUFACTURER.

KEY NOTES:

1. REATTACH EXISTING GATE AFTER PERFORMING ANY REQUIRED CONCRETE REPAIR. SEE PHOTO 1/S03.
2. CORE 4" DIAMETER HOLE THROUGH EXISTING CONCRETE SLAB AS REQUIRED FOR ODOR CONTROL DUCT PENETRATION. EXAMINE CORED HOLE AND IF EXISTING REBAR WAS CUT, BURN BACK 1/2" AND FILL WITH EPOXY. FOR MECHANICAL REQUIREMENTS SEE DETAIL 2 ON DRAWING M03.
3. CUT 4" DIAMETER HOLE THROUGH EXISTING ALUMINUM PLATE AS REQUIRED FOR ODOR CONTROL DUCT PENETRATION. FOR MECHANICAL REQUIREMENTS SEE DETAIL 1 ON DRAWING M03.
4. W8x24 LOCATED OVER THE TOP OF THE ODOR CONTROL DUCT.
5. PROVIDE WEEPHOLES IN CURB AT 4'-0" ON CENTER FOR DRAINAGE.

REV	DATE	BY	DESCRIPTION

DESIGNED RW
DRAWN TJD
CHECKED VC
DATE FEBRUARY 2023

RICHARD C. WARNER LICENSE No 79572 STATE OF FLORIDA PROFESSIONAL ENGINEER

THIS ITEM HAS BEEN DIGITALLY SIGNED AND SEALED BY RICHARD C. WARNER ON THE DATE ADJACENT TO THE SEAL.

PRINTED COPIES OF THIS DOCUMENT ARE NOT CONSIDERED SIGNED AND SEALED AND THE SIGNATURE MUST BE VERIFIED ON ANY ELECTRONIC COPIES.

RICHARD C. WARNER LICENSE No. 79572 STATE OF FLORIDA PROFESSIONAL ENGINEER 1/12/2024

carollo®
2056 VISTA PARKWAY, SUITE 400
WEST PALM BEACH, FL 33411
PHONE: 561-868-6403 FAX: 561-868-6401
CA 00008571

CITY OF STUART, FLORIDA INCORPORATED 1914 THE TREASURE CAPITAL OF THE WORLD

CITY OF STUART

WRF HEADWORKS REHABILITATION - PHASE 1

STRUCTURAL

HEADWORKS PLANS

VERIFY SCALES
BAR IS ONE INCH ON ORIGINAL DRAWING
0 1"
IF NOT ONE INCH ON THIS SHEET, ADJUST SCALES ACCORDINGLY

JOB NO. 201076
DRAWING NO. S02
SHEET NO. 10 OF 29

PROJECT NO. 201076-100000 FILE NAME: 20107600S02.dgn

Plot Date: 24-FEB-2023 9:46:49 AM
User: svcPW
Model: Layout1 ColorTable: gshade.ctb DesignScript: Carollo_Std_Pen_v0905.pen PlotScale: 1:1
LAST SAVED BY: TDietz

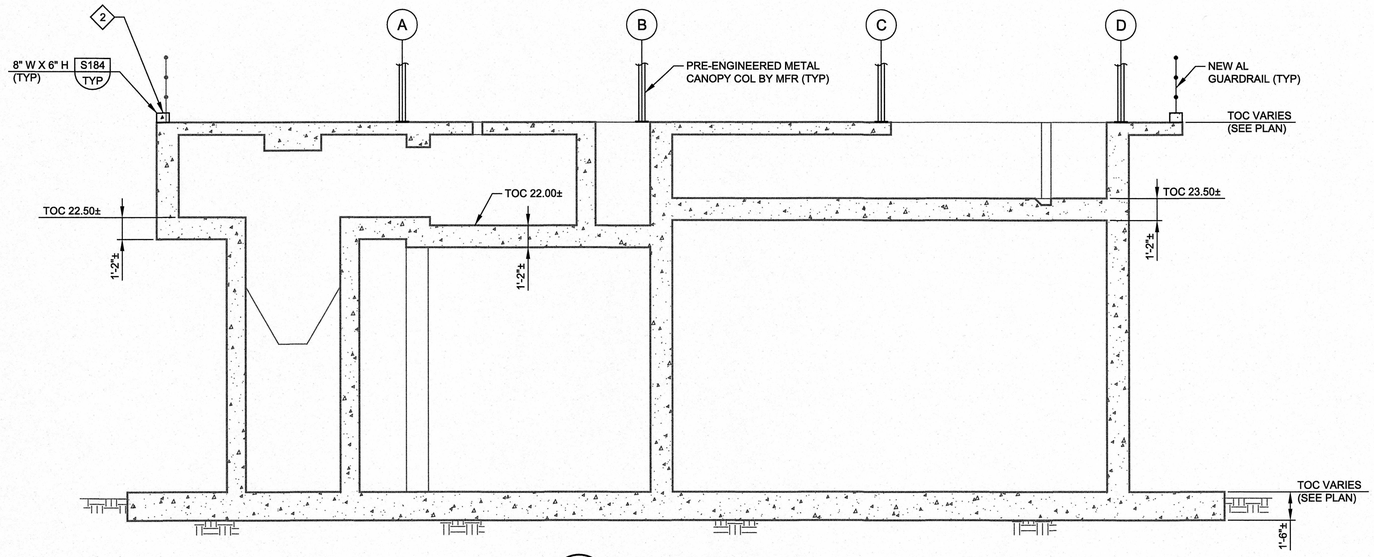

D SECTION
S02
SCALE: 1/4" = 1'-0"
FILE: 20107600S9301

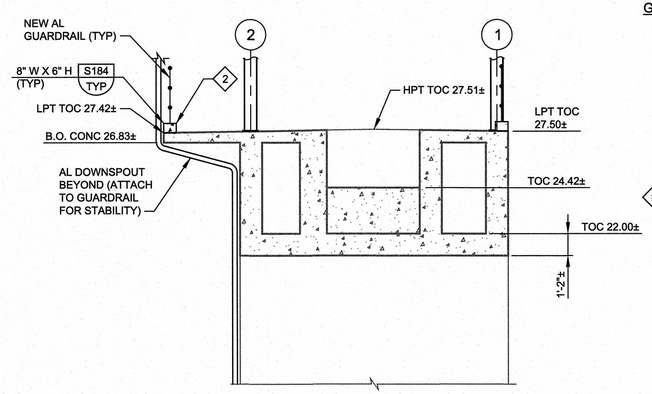

E SECTION
S02
SCALE: 1/4" = 1'-0"
FILE: 20107600S9303

GENERAL NOTES:

1. FOR GENERAL STRUCTURAL NOTES SEE DRAWING S01.
2. EXISTING CONDITIONS
   A. FIELD VERIFY ALL EXISTING DIMENSIONS, ELEVATIONS, AND CONDITIONS PRIOR TO DEMOLITION, SHOP DRAWING PREPARATION AND FABRICATION.
3. FOR CONCRETE REPAIR DETAILS AND REQUIREMENTS SEE DRAWINGS S05 AND S06 AND REFER TO SPECIFICATION SECTION 03926.
4. FOR PRE-ENGINEERED METAL CANOPY REQUIREMENTS REFER TO SPECIFICATION SECTION 13122.

KEY NOTES:

1. REATTACH EXISTING GATE AFTER PERFORMING ANY REQUIRED CONCRETE REPAIR. SEE PHOTO 1/-.
2. PROVIDE WEEPHOLES IN CURBS AT 4'-0" ON CENTER FOR DRAINAGE.

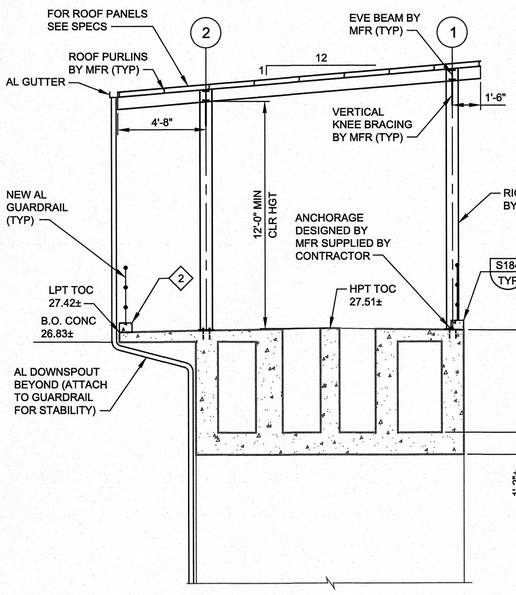

F SECTION
S02
SCALE: 1/4" = 1'-0"
FILE: 20107600S9302

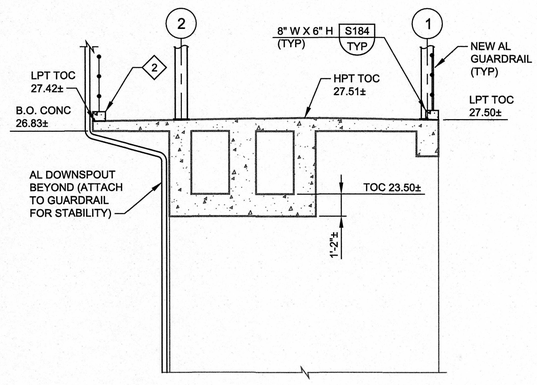

G SECTION
S02
SCALE: 1/4" = 1'-0"
FILE: 20107600S9304

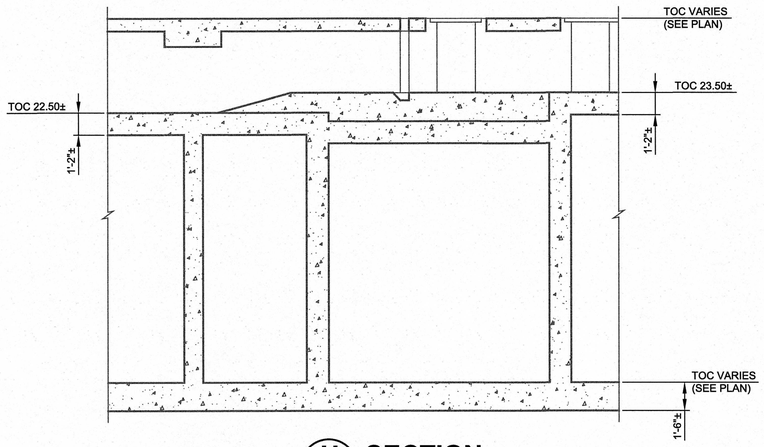

H SECTION
S02
SCALE: 1/4" = 1'-0"
FILE: 20107600S9305



1 PHOTO
S02
SCALE: NO SCALE
FILE: 20107600S02A

REV	DATE	BY	DESCRIPTION

DESIGNED RW
DRAWN TJD
CHECKED VC
DATE FEBRUARY 2023

RICHARD C. WARNER LICENSE No 79572 STATE OF FLORIDA PROFESSIONAL ENGINEER

THIS ITEM HAS BEEN DIGITALLY SIGNED AND SEALED BY RICHARD C. WARNER ON THE DATE ADJACENT TO THE SEAL.

PRINTED COPIES OF THIS DOCUMENT ARE NOT CONSIDERED SIGNED AND SEALED AND THE SIGNATURE MUST BE VERIFIED ON ANY ELECTRONIC COPIES.

RICHARD C. WARNER LICENSE No. 79572 STATE OF FLORIDA PROFESSIONAL ENGINEER
1/12/2024

carollo
2056 VISTA PARKWAY, SUITE 400
WEST PALM BEACH, FL 33411
PHONE: 561-868-6403 FAX: 561-868-6401
CA 00008571

CITY OF STUART, FLORIDA · INCORPORATED 1914 · SMALL TOWN LIVING, BIG TIME FUN · BOATING CAPITAL OF THE WORLD

CITY OF STUART
WRF HEADWORKS REHABILITATION - PHASE 1
STRUCTURAL
HEADWORKS SECTIONS AND DETAILS

VERIFY SCALES
BAR IS ONE INCH ON ORIGINAL DRAWING
0 1"
IF NOT ONE INCH ON THIS SHEET, ADJUST SCALES ACCORDINGLY

JOB NO. 201076
DRAWING NO. S03
SHEET NO. 11 OF 29

Plot Date: 24-FEB-2023 9:46:38 AM
User: svcPW
Model: Layout1 ColorTable: gshade.ctb DesignScript: Carollo_Std_Pen_v0905.pen PlotScale: 1:1
LAST SAVED BY: TDietz

PROJECT NO. 201076-100000 FILE NAME: 20107600S03.dgn

GENERAL NOTES:

1. FOR GENERAL STRUCTURAL NOTES SEE DRAWING S01.
2. ALL PIPE SUPPORT MATERIALS AND BOLTS SHALL BE HOT-DIP GALVANIZED.

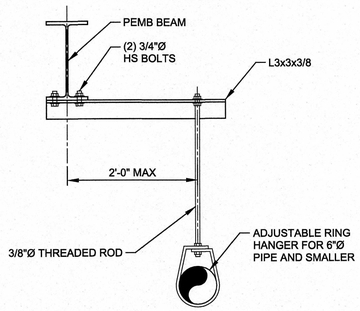

GRAVITY SUPPORT T1

2 DETAIL S02 — SCALE: NO SCALE — FILE: 20107600S0401

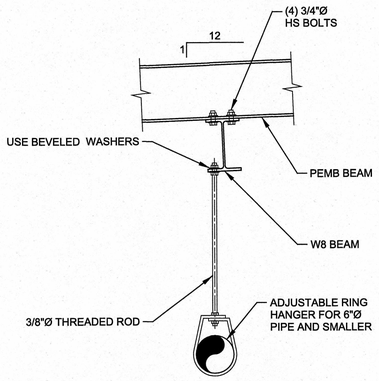

GRAVITY SUPPORT T2

3 DETAIL S02 — SCALE: NO SCALE — FILE: 20107600S0401

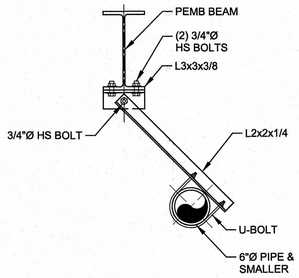

TRANSVERSE SUPPORT T3

4 DETAIL S02 — SCALE: NO SCALE — FILE: 20107600S0401

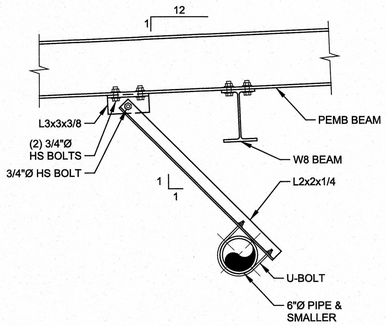

TRANSVERSE SUPPORT T4

5 DETAIL S02 — SCALE: NO SCALE — FILE: 20107600S0401

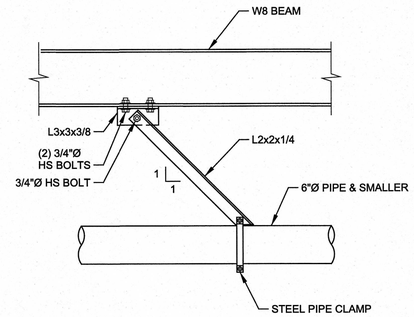

LONGITUDINAL SUPPORT T5

6 DETAIL S02 — SCALE: NO SCALE — FILE: 20107600S0401

REV	DATE	BY	DESCRIPTION

DESIGNED RW
DRAWN CH
CHECKED VC
DATE FEBRUARY 2023

RICHARD C. WARNER LICENSE No 79572 STATE OF FLORIDA PROFESSIONAL ENGINEER

THIS ITEM HAS BEEN DIGITALLY SIGNED AND SEALED BY RICHARD C. WARNER ON THE DATE ADJACENT TO THE SEAL.

PRINTED COPIES OF THIS DOCUMENT ARE NOT CONSIDERED SIGNED AND SEALED AND THE SIGNATURE MUST BE VERIFIED ON ANY ELECTRONIC COPIES.

RICHARD C. WARNER LICENSE No. 79572 STATE OF FLORIDA PROFESSIONAL ENGINEER 1/12/2024

carollo®
2056 VISTA PARKWAY, SUITE 400
WEST PALM BEACH, FL 33411
PHONE: 561-868-6403 FAX: 561-868-6401
CA 00008571

CITY OF STUART

WRF HEADWORKS REHABILITATION - PHASE 1

STRUCTURAL

HEADWORK DETAILS

VERIFY SCALES
BAR IS ONE INCH ON ORIGINAL DRAWING
0 1"
IF NOT ONE INCH ON THIS SHEET, ADJUST SCALES ACCORDINGLY

JOB NO. 201076
DRAWING NO. S04
SHEET NO. 12 OF 29

PROJECT NO. 201076-100000 FILE NAME: 20107600S04.dgn

CONCRETE REPAIR SCHEDULE

REPAIR TYPE	DETAIL	DESCRIPTION	SURFACE PREPARATION	SIKA		EUCLID		BASF	
				PRIMER/BONDING AGENT	REPAIR MORTAR	PRIMER/BONDING AGENT	REPAIR MORTAR	PRIMER/BONDING AGENT	REPAIR MORTAR
1	7/S05	SURFACE CONCRETE PATCHING - DAMAGE LESS THAN 1/2 - INCH DEEP NO EXPOSED REBAR	SAW CUT EDGES, SHOT BLASTING DOWN TO HARDENED CONCRETE AND SQUARE OFF EDGES	SIKA ARMATEC 110 EPOCEM AT EXPOSED STEEL CHAIRS OTHER WISE SIKADUR 32 HI-MOD LPL ON CONCRETE	SIKATOP 123 PLUS EXCEPT SIKATOP 121 FOR REPAIRS 1/8-INCH OR LESS IN DEPTH.	DUALPREP AC AT EXPOSED STEEL CHAIRS OTHERWISE EUCOPOXY LPL MV ON CONCRETE	TAMMSPATCH II EXTERIOR WALL SURFACE	EMACO P24 AT EXPOSED STEEL CHAIRS OTHERWISE CONCRESIVE LIQUID LPL	EMACO 100 1/4-INCH MINIMUM THICKNESS EXTERIOR WALL SURFAC
2	8/S05	SHALLOW CONCRETE PATCHING - DAMAGE EQUAL OR GREATER THAN 1/2-INCH IN DEPTH EXTENDING TO THE REBAR SURFACE.	CLEAN DEBRIS, SQUARE OFF EDGES, AND ROUGHEN SURFACE.	SIKA ARMATEC 110 EPOCEM AT EXPOSED STEEL CHAIRS AND REINFORCEMENT OTHERWISE SIKADUR 32 HI-MOD LPL ON CONCRETE	SIKATOP 123 PLUS AT 1.5-INCH LIFTS MAXIMUM (1/8-INCH LIFTS MINIMUM)	DURALPREP AC AT EXPOSED STEEL CHAIRS AND REINFORCEMENT OTHERWISE EUCOPOXY LPL MV ON CONCRETE	TAMMSPATCH II EXTEND WITH AGGREGATE FOR FILL AREAS DEEPER THAN 3/4-INCH USE MULTIPLE LIFTS	EMACO P24 AT EXPOSED STEEL CHAIRS AND REINFORCEMENT OTHERWISE CONCRESIVE LIQUID LPL	EMACO 100 1/4-INCH MINIMUM THICKNESS EXTEND WITH AGGREGATE FOR FILL AREAS DEEPER THAN 3/4-INCH USE MULTIPLE LIFTS
3	9/S05	DEEP CONCRETE PATCHING - DAMAGE EXTENDS BEYOND THE OUT SIDE FACE OF EXPOSED REBAR AND DEEPER INTO STRUCTURE.	CLEAN DEBRIS, SQUARE EDGES, ROUGHEN SURFACE	SIKA ARMATEC 110 EPOCEM AT EXPOSED STEEL CHAIRS AND REINFORCEMENT OTHERWISE SIKADUR 32 HI-MOD LPL ON CONCRETE	SIKATOP 123 PLUS AT 1.5-INCH LIFTS MAXIMUM (1/8-INCH LIFTS MINIMUM)	DURALPREP AC AT EXPOSED STEEL CHAIRS AND REINFORCEMENT OTHERWISE EUCOPOXY LPL MV ON CONCRETE	VERTICOAT OR USE TAMMSPATCH II EXTEND WITH AGGREGATE FOR FILL AREAS DEEPER THAN 3/4-INCH USE MULTIPLE LIFTS	EMACO P24 AT EXPOSED STEEL CHAIRS AND REINFORCEMENT OTHERWISE CONCRESIVE LIQUID LPL	HB2 REPAIR MORTAR USE MULTIPLE LIFTS (1 1/2" MAX OR 3/8" MIN)

NOTES:
1. ALL REPAIRS SHALL BE FIELD DETERMINED.

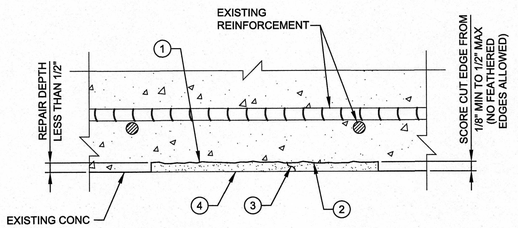

KEY NOTES:

1. ROUGHEN SURFACE PER ICRI-GUIDELINE NO. 310.2 CSP 6 UNLESS OTHERWISE NOTED
2. APPLY BONDING AGENT.
3. REPAIR MORTAR SHALL BE A TWO-COMPONENT POLYMER-MODIFIED CEMENTITIOUS TROWEL-GRADE MORTAR.
4. ROUGHEN SURFACE PER ICRI GUIDELINE NO. 310.2 CSP 4 WHERE ELASTOMERIC COATING WILL BE INSTALLED.

SURFACE CONCRETE REPAIR
REPAIR TYPE 1

7 / - **DETAIL**
SCALE: NO SCALE
FILE: -

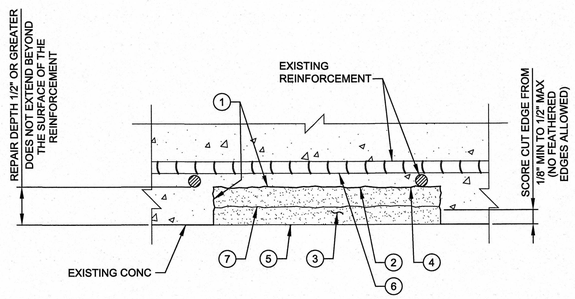

KEY NOTES:

1. ROUGHEN SURFACE PER ICRI-GUIDELINE NO. 03732 CSP 6 UNLESS OTHERWISE NOTED.
2. APPLY AN EPOXY BONDING AGENT.
3. REPAIR MORTAR SHALL BE A TWO-COMPONENT POLYMER-MODIFIED CEMENTITIOUS TROWEL-GRADE MORTAR. EXTEND MORTAR WHEN REPAIR THICKNESS OR LIFT IS GREATER THAN 3/4" PER MANUFACTURER INSTRUCTIONS. EXTEND MORTAR WITH AGGREGATE. SEE DETAIL A/S4 FOR PINNING OVERHEAD AND VERTICAL PATCHES.
4. CONCRETE COVER OF REINFORCEMENT SHALL NOT BE LESS THAN 1-1/4 INCHES. NOTIFY STRUCTURAL ENGINEER FOR REPAIR PROCEDURES IF EXISTING COVER IS FOUND LESS.
5. ROUGHEN SURFACE PER ICRI GUIDELINE NO. 310.2 CSP 4 WHERE ELASTOMERIC COATING WILL BE INSTALLED.
6. IF REINFORCEMENT SHOWS SIGNS OF CORROSION, EXPOSE REINFORCEMENT IN REPAIR TYPE 1 A AND REPAIR AS A DEEP CONCRETE REPAIR TYPE 4.
7. FOR REPAIR MORTAR PLACED IN MULTIPLE LIFTS ROUGHEN SURFACE OF MORTAR AND APPLY A BONDING AGENT BEFORE APPLYING NEW LIFT.

SHALLOW CONCRETE REPAIR
REPAIR TYPE 2

8 / - **DETAIL**
SCALE: NO SCALE
FILE: -

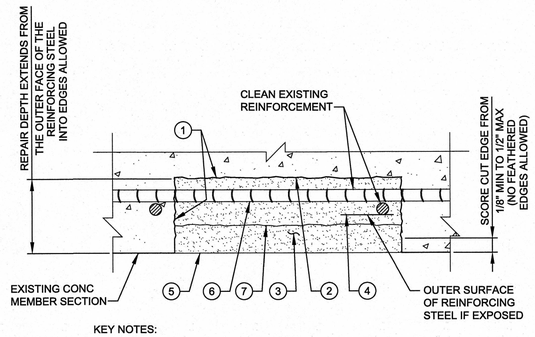

KEY NOTES:

1. ROUGHEN SURFACE PER ICRI-GUIDELINE NO. 03732 CSP 6 UNLESS OTHERWISE NOTED.
2. APPLY AN EPOXY BONDING AGENT.
3. REPAIR MORTAR SHALL BE A TWO-COMPONENT POLYMER-MODIFIED CEMENTITIOUS TROWEL-GRADE MORTAR. EXTEND MORTAR WHEN REPAIR THICKNESS OR LIFT IS GREATER THAN 3/4" PER MANUFACTURER INSTRUCTIONS. EXTEND MORTAR WITH AGGREGATE. SEE DETAIL A/S4 FOR PINNING OVERHEAD AND VERTICAL PATCHES.
4. CONCRETE COVER OF REINFORCEMENT SHALL NOT BE LESS THAN 1-1/4 INCHES. NOTIFY ENGINEER FOR REPAIR PROCEDURES IF EXISTING COVER IS FOUND LESS.
5. ROUGHEN SURFACE PER ICRI GUIDELINE NO. 310.2 CSP 4 WHERE ELASTOMERIC COATING WILL BE INSTALLED.
6. REMOVE ALL CORROSION FROM REINFORCING. APPLY BONDING AGENT WITH CORROSION INHIBITOR.
7. FOR REPAIR MORTAR PLACED IN MULTIPLE LIFTS ROUGHEN SURFACE OF MORTAR AND APPLY A BONDING AGENT BEFORE APPLYING NEW LIFT.

DEEP CONCRETE REPAIR
REPAIR TYPE 3

9 / - **DETAIL**
SCALE: NO SCALE
FILE: -

REV	DATE	BY	DESCRIPTION

DESIGNED RW
DRAWN TJD
CHECKED VC
DATE FEBRUARY 2023

RICHARD C. WARNER LICENSE No 79572 STATE OF FLORIDA PROFESSIONAL ENGINEER

THIS ITEM HAS BEEN DIGITALLY SIGNED AND SEALED BY RICHARD C. WARNER ON THE DATE ADJACENT TO THE SEAL.

PRINTED COPIES OF THIS DOCUMENT ARE NOT CONSIDERED SIGNED AND SEALED AND THE SIGNATURE MUST BE VERIFIED ON ANY ELECTRONIC COPIES.

RICHARD C. WARNER LICENSE No. 79572 STATE OF FLORIDA PROFESSIONAL ENGINEER 1/12/2024

carollo®
2056 VISTA PARKWAY, SUITE 400
WEST PALM BEACH, FL 33411
PHONE: 561-868-6403 FAX: 561-868-6401
CA 00008571

CITY OF STUART · FLORIDA · INCORPORATED 1914 · SAILFISH CAPITAL OF THE WORLD

CITY OF STUART
WRF HEADWORKS REHABILITATION - PHASE 1
STRUCTURAL
DETAILS 1

VERIFY SCALES
BAR IS ONE INCH ON ORIGINAL DRAWING
0 1"
IF NOT ONE INCH ON THIS SHEET, ADJUST SCALES ACCORDINGLY

JOB NO. 201076
DRAWING NO. S05
SHEET NO. 13 OF 29

PROJECT NO. 201076-100000 FILE NAME: 20107600S05.dgn

LAST SAVED BY: TDietz PlotScale: 1:1 Model: Layout1 ColorTable: gshade.ctb DesignScript: Carollo_Std_Pen_v0905.pen User: svcPW Plot Date: 24-FEB-2023 9:46:24 AM

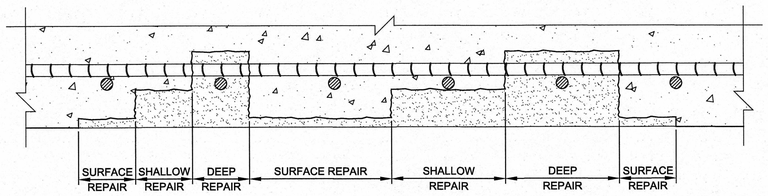

A-A
SECTION

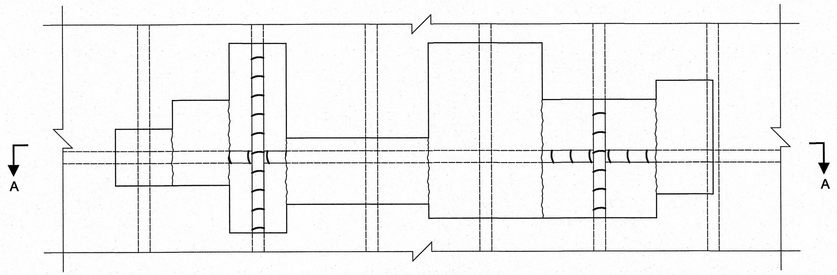

ELEVATION

EXAMPLE OF COMBINATION OF CONCRETE REPAIRS

10 DETAIL
SCALE: NO SCALE
FILE: -

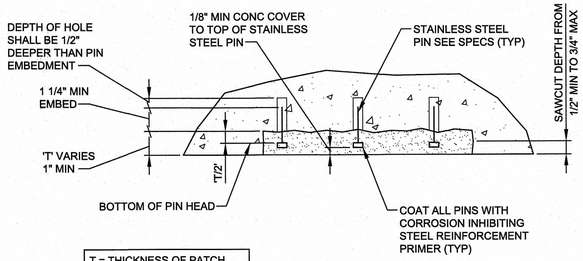

T = THICKNESS OF PATCH

NOTE:
STAINLESS STEEL WIRE NOT SHOWN FOR CLARITY

B-B
SECTION

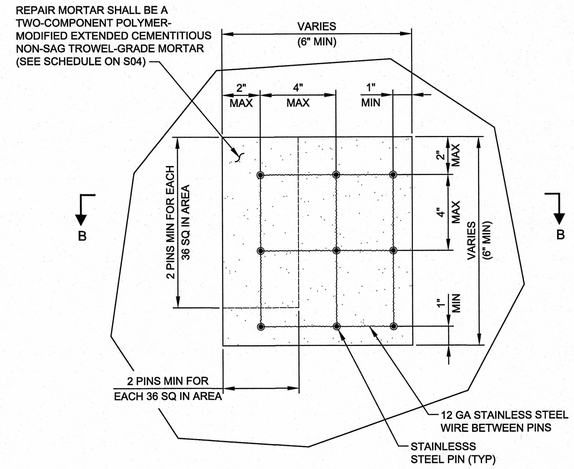

WALL ELEVATION OR OVERHEAD PLAN VIEW

NOTE:
PATCH AREAS SMALLER THAN 36 SQ. IN AND LESS THAN 1 IN THICK DO NOT REQUIRE PINS

PINNING DETAIL FOR OVERHEAD AND VERTICAL PATCHES
(THICKNESS OF PATCH REPAIR 1 INCH OR GREATER)

11 DETAIL
SCALE: NO SCALE
FILE: -

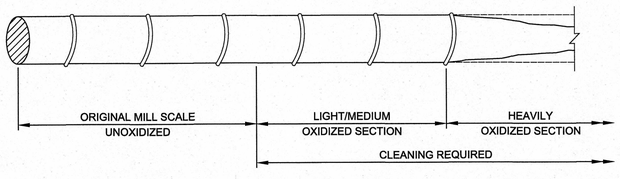

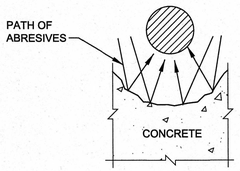

CLEANING UNDERSIDE OF REBAR

ALL HEAVY OXIDES AND SCALE SHOULD BE REMOVED FROM THE BAR AS NECESSARY TO PROMOTE MAXIMUM BOND OF REPLACEMENT MATERIAL. OIL FREE ABRASIVE BLAST IS THE PREFERRED METHOD. A TIGHTLY BONDED LIGHT OXIDE BUILD-UP ON THE SURFACE MAY RESULT FROM HIGH-PRESSURE WATERBLASTING, WITH OR WITHOUT ABRASIVE. THIS IS USUALLY NOT DETRIMENTAL TO BOND, UNLESS A PROTECTIVE COATING IS BEING APPLIED TO THE BAR SURFACE, IN WHICH CASE THE COATING MANUFACTURER'S RECOMMENDATIONS FOR SURFACE PREPARATION SHOULD BE FOLLOWED.

CLEANING OF REINFORCING STEEL
(SEE IRCI-GUIDELINE NO. 03730)

12 DETAIL
SCALE: NO SCALE
FILE: -

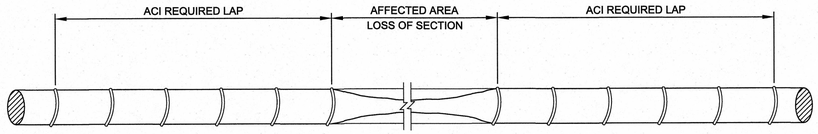

STRUCTURAL ENGINEER WILL DETERMINE IF REBAR HAS LOST MORE THAN 25% OF ITS CROSS SECTION (20% IF 2 OR MORE CONSECUTIVE PARALLEL BARS ARE AFFECTED).

IF REPAIRS ARE REQUIRED TO THE REINFORCING STEEL,
ONE OF THE FOLLOWING REPAIR METHODS SHOULD BE USED:

1. COMPLETE BAR REPLACEMENT
2. ADDITION OF SUPPLEMENTAL BAR OVER AFFECTED SECTION. NEW BAR MAY BE MECHANICALLY SPLICED TO OLD BAR OR PLACED PARALLEL TO AND APPROXIMATELY 3/4" FROM EXISTING BAR

LAP LENGTH SHALL BE DETERMINATE IN ACCORDANCE WITH ACI 318, ALSO REFER TO CRSI.

NOTE: THE CONTRACTOR SHALL NOTIFY THE STRUCTURAL ENGINEER IF ANY EXISTING REINFORCEMENT BARS ARE CUT, CRACKED, OR THE CROSS SECTION AREA IS REDUCED BY CORROSION.

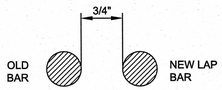

RECOMMENDED CLEARANCE

REPAIR OF REINFORCING STEEL
DUE TO LOSS OF SECTION

13 DETAIL
SCALE: NO SCALE
FILE: -

REV	DATE	BY	DESCRIPTION

DESIGNED RW
DRAWN TJD
CHECKED VC
DATE FEBRUARY 2023

RICHARD C. WARNER LICENSE No 79572 STATE OF FLORIDA PROFESSIONAL ENGINEER

THIS ITEM HAS BEEN DIGITALLY SIGNED AND SEALED BY RICHARD C. WARNER ON THE DATE ADJACENT TO THE SEAL.

PRINTED COPIES OF THIS DOCUMENT ARE NOT CONSIDERED SIGNED AND SEALED AND THE SIGNATURE MUST BE VERIFIED ON ANY ELECTRONIC COPIES.

RICHARD C. WARNER LICENSE No. 79572 STATE OF FLORIDA PROFESSIONAL ENGINEER
11/12/2024

carollo®
2056 VISTA PARKWAY, SUITE 400
WEST PALM BEACH, FL 33411
PHONE: 561-868-6403 FAX: 561-868-6401
CA 00008571

CITY OF STUART · FLORIDA · INCORPORATED 1914 · TREASURE CAPITAL OF THE WORLD

CITY OF STUART
WRF HEADWORKS REHABILITATION - PHASE 1
STRUCTURAL
DETAILS 2

VERIFY SCALES
BAR IS ONE INCH ON ORIGINAL DRAWING
0 1"
IF NOT ONE INCH ON THIS SHEET, ADJUST SCALES ACCORDINGLY

JOB NO. 201076
DRAWING NO. S06
SHEET NO. 14 OF 29

PROJECT NO. 201076-100000 FILE NAME: 20107600S06.dgn

Plot Date: 24-FEB-2023 9:46:53 AM
User: svcPW
Model: Layout1 ColorTable: gshade.ctb DesignScript: Carollo_Std_Pen_v0905.pen PlotScale: 1:1
LAST SAVED BY: TDietz

PIPING SYMBOLS

DOUBLE LINE	SINGLE LINE	DESCRIPTION
		WELDED JOINT
		GROOVED END JOINT
		FLANGED JOINT
		HUB & SPIGOT JOINT (RUBBER GASKET)
		PUSH-ON JOINT (RESTRAINED)
		ADAPTER SIDE GROOVED END ADAPTER FLANGE
		FLANGED COUPLING ADAPTER
		FLANGED COUPLING ADAPTER WITH THRUST TIES
		FLEXIBLE COUPLING
		FLEXIBLE COUPLING WITH THRUST TIES
		METAL BELLOWS EXP JOINT
		ELASTOMER BELLOWS EXP JOINT
		FLEXIBLE COUPLING ADAPTER
		DISMANTLING JOINT
		EXPANSION COMPENSATOR
		ELBOW UP
		ELBOW DOWN
		TEE UP
		TEE DOWN
		LATERAL UP
		LATERAL DOWN
		CONCENTRIC REDUCER
		ECCENTRIC REDUCER (FOT. FOB)
		UNION
		CAP
		ANCHOR
		ELBOW, 90 DEGREE
		CROSS
		TEE
		ELBOW, 45 DEGREE
		ELBOW, 22.5 DEGREE
		ELBOW, 11.25 DEGREE
		LATERAL

DOUBLE LINE	SINGLE LINE	DESCRIPTION
		GATE VALVE
	K	KNIFE GATE VALVE
		BUTTERFLY VALVE
	V	CHARACTERIZED BALL CONTROL VALVE
		BALL VALVE
		GLOBE VALVE
		3-WAY VALVE
		3-WAY GLOBE TYPE MIXING VALVE
		4-WAY VALVE
		DIAPHRAGM VALVE
		PLUG VALVE
		LUBRICATED PLUG VALVE
		CONCENTRIC PLUG VALVE
		LUBRICATED CONCENTRIC PLUG VALVE
		SWING CHECK VALVE
		WAFER CHECK VALVE
		PINCH VALVE
		BALL CHECK VALVE
		DUAL CHECK VALVE
		SILENT CHECK VALVE
		MUD VALVE (PLAN VIEW)
		NEEDLE VALVE
		CHECK BACKFLOW PREVENTER
		PIPE MATERIAL CHANGE
		FLOAT VALVE
		3-WAY PLUG VALVE
		BALL V-NOTCH VALVE
		PUMP DISCHARGE

MECHANICAL SYMBOLS

SINGLE LINE	DESCRIPTION
	AIR OR CHEMICAL DIFFUSER
	QUICK DISCONNECT HIGH PRESSURE AIR OR FLUSHING
	BATCHMETER
	AIR VENT
	BASKET STRAINER
	BLOWER
	CALIBRATION COLUMN
	COMPRESSOR/TURBINE
	COMPRESSOR: RECIPROCATING
	DIAPHRAGM SEAL
	DRAIN
	EJECTOR OR EDUCTOR
M	ELECTRIC MOTOR
	EQUIPMENT DRAIN
	EXPANSION JOINT, FLEXIBLE VIBRATION JOINT
	FAN: EXHAUST/SUPPLY
	FILTER
	FIRE HYDRANT
	FLAME ARRESTER
	FLAME ARRESTER WITH THERMALLY OPERATED VALVE
	FLOOR DRAIN
	FLOW SWITCH
	GAUGE: PRESSURE
	GAUGE: DIFFERENTIAL PRESSURE
	WEIR
	MIXER
	OIL OR MOISTURE TRAP
	PRIMARY LEVEL ELEMENT: BUBBLER
	PRIMARY LEVEL ELEMENT: ELECTRODE
	PRIMARY LEVEL ELEMENT: FLOAT SWITCH
	PRIMARY LEVEL ELEMENT: FLUID
	PRIMARY LEVEL ELEMENT: INVERTED COLUMN

SINGLE LINE	DESCRIPTION
	PRIMARY LEVEL ELEMENT: RADAR
	PRIMARY LEVEL ELEMENT: ULTRASONIC
	PRIMARY FLOW ELEMENT: FLUME
X	PRIMARY FLOW ELEMENT: X = C - CORIOLIS X = M - MAGNETIC X = P - PROPELLER X = PT - PITOT TUBE X = R - ROTAMETER X = T - TURBINE X = TH - THERMAL X = U - ULTRASONIC X = D - DENSITY
	PRIMARY FLOW ELEMENT: ORIFICE PLATE
	PRIMARY FLOW ELEMENT: VENTURI TUBE
	PRIMARY FLOW ELEMENT: WEIR
	PULSATION DAMPENER
	PUMP: CENTRIFUGAL
	PUMP: DIAPHRAGM
	PUMP: METERING
	PUMP: PLUNGER
	PUMP: PERISTALTIC TUBE METERING
	PUMP: PROGRESSIVE CAVITY
	PUMP: RECIPROCATING
	PUMP: ROTARY
	PUMP: SCREW
	PUMP: SUBMERSIBLE
	PUMP: VERTICAL LIFT
	PIPE REDUCER: CONCENTRIC
	PIPE REDUCER: ECCENTRIC (FOT, FOB)
	ROTARY CHEMICAL FEEDER
	RUPTURE DISK
	SAMPLE PORT
	SIGHT GLASS
	SLIDE GATE
	SLUICE GATE
	STRAINER: WYE TYPE

SINGLE LINE	DESCRIPTION
	STRAINER: WYE TYPE WITH BLOWOFF
	THERMOMETER
	VALVE: ANGLE
	VALVE: AIR RELIEF
	VALVE: CONE
	VALVE: FLAPPER CHECK
	VALVE: FOUR WAY
	VALVE: HOSE
	VALVE: PLUG CONCENTRIC
	VALVE: PRESSURE RELIEF PRESSURE-REDUCING REGULATOR
	VALVE: TELESCOPING
	VALVE: THREE WAY AIR OPERATED
M	VALVE: THREE WAY MOTOR OPERATED
S	VALVE: THREE WAY SOLENOID OPERATED
	VALVE: VACUUM
	BACKPRESSURE REGULATOR SELF-CONTAINED
	BACKPRESSURE REGULATOR W/ EXTERNAL PRESSURE TAP
	PRESSURE-REDUCING REGULATOR: SELF-CONTAINED
	PRESSURE-REDUCING REGULATOR W/EXTERNAL PRESSURE TAP

IDENTIFICATION SYMBOLS

CHEMICAL INJECTION POINT

PIPE DESIGNATOR

CONTINUATION TAG

EQUIPMENT / VALVE TAG

KEY TAG

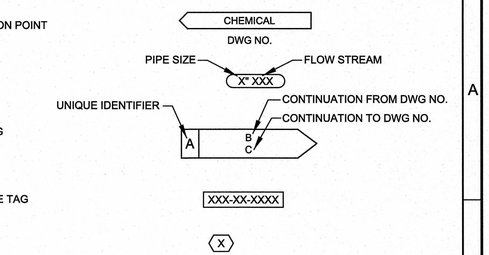

LINE SYMBOLS

PIPE ABOVE OR BELOW GROUND

PIPE UNDERNEATH SLAB OR STRUCTURE

FUTURE

EXISTING

DEMOLISH AND REMOVE

PROCESS LINE SYMBOLS

PRIMARY PROCESS FLOW IN PIPE

SECONDARY PROCESS FLOW IN PIPE

PRIMARY PROCESS FLOW IN CHANNEL

SECONDARY PROCESS FLOW IN CHANNEL

REV	DATE	BY	DESCRIPTION

DESIGNED CE
DRAWN CE
CHECKED CE
DATE FEBRUARY 2023

3/26/24

carollo®
2056 VISTA PARKWAY, SUITE 400
WEST PALM BEACH, FL 33411
PHONE: 561-868-6403 FAX: 561-868-6401
CA 00008571

CITY OF STUART

WRF HEADWORKS REHABILITATION - PHASE 1

MECHANICAL

MECHANICAL LEGEND AND SYMBOLS

VERIFY SCALES
BAR IS ONE INCH ON ORIGINAL DRAWING
0 1"
IF NOT ONE INCH ON THIS SHEET, ADJUST SCALES ACCORDINGLY

JOB NO. 201076
DRAWING NO. M01
SHEET NO. 15 OF 29

PROJECT NO. 201076-100000 FILE NAME: 20107600M01.dgn

LAST SAVED BY: TDietz
Model: Layout1 ColorTable: gshade.ctb DesignScript: Carollo_Std_Pen_v0905.pen PlotScale: 1:1
User: svcPW Plot Date: 24-FEB-2023 9:42:19 AM

Plot Date: 24-FEB-2023 9:42:27 AM
User: svcPW
PlotScale: 1:1
DesignScript: Carollo_Std_Pen_v0905.pen
ColorTable: gshade.ctb
Model: Layout1
LAST SAVED BY: TDietz

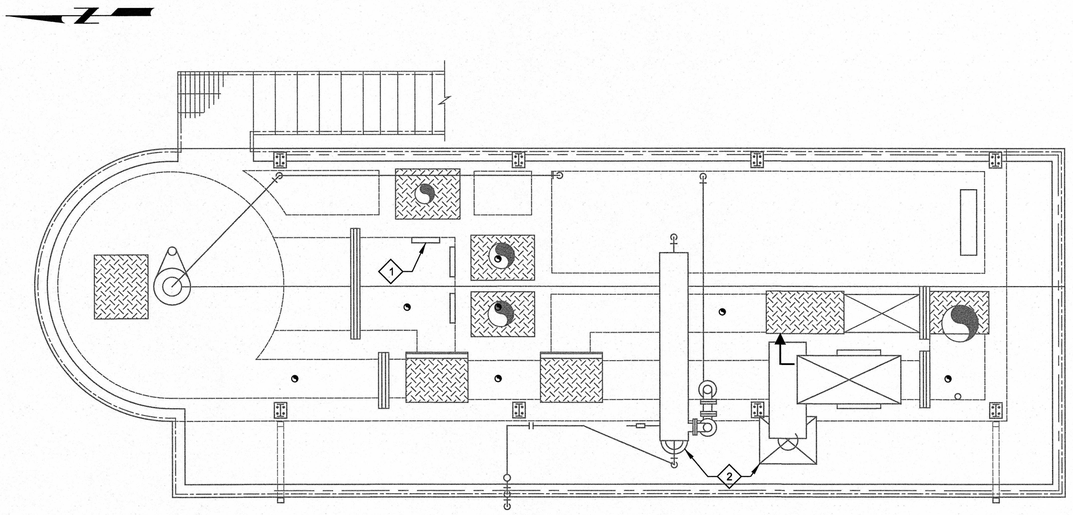

TOP

A PLAN

SCALE: 1/4" = 1'-0"
FILE: 20107600M9101

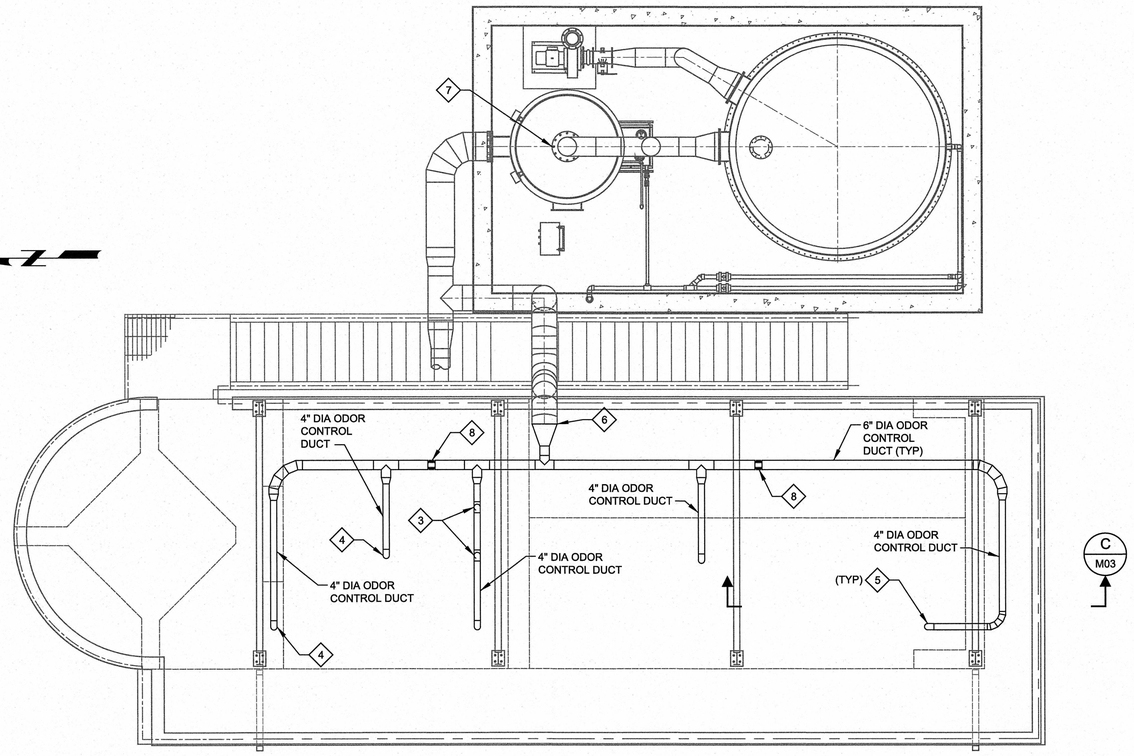

ROOF

B PLAN

SCALE: 1/4" = 1'-0"
FILE: 20107600M0102

GENERAL NOTES:

1. ALL NEW ODOR DUCTS TO BE SUPPORTED FROM PRE-ENGINEERED METAL CANOPY.
2. ALL 4" ODOR DUCTS TO BE PVC AND ALL 6" ODOR DUCTS TO BE FRP. CONTRACTOR TO PROVIDE FLANGE CONNECTIONS BETWEEN PVC AND FRP MATERIALS.

KEY NOTES:

1. ALL GATE ATTACHMENTS TO BE FITTED WITH RUBBER SKIRTS OR EQUIVALENT TECHNOLOGY TO PREVENT ESCAPE OF FOUL ODORS.
2. CONTRACTOR TO SIZE AND SUPPLY FRP ENCLOSURE FOR BAR SCREEN AND GRIT REMOVAL EQUIPMENT TO PREVENT ESCAPE OF FOUL ODORS. ENCLOSURE TO INCLUDE FRP SHEET WITH STIFFENERS AND 316 SS HARDWARE.
3. MODIFY EXISTING ALUMINUM CHECKERED PLATE TO ALLOW INSTALLATION OF NEW ODOR DUCT DROP LEGS AS SHOWN ON THE DRAWINGS. CHECKER PLATE MANUFACTURER TO PROVIDE AN ALUMINUM RAISED FLANGE SPOOL ASSEMBLY AND ASSOCIATED PENETRATION KIT FOR CONNECTION TO NEW PVC DUCT. FOR CONNECTION TO NEW PVC DUCT AS INDICATED ON DETAIL 1/M03.
4. OPENING TO BE CORED IN EXISTING CONCRETE SURFACE AT ODOR DUCT DROP LEG LOCATIONS SHOWN ON DRAWINGS TO ALLOW INSTALLATION OF RAISED FLANGE SPOOL ASSEMBLY. ASSEMBLY TO BE ANCHORED INTO CONCRETE SURFACE AS INDICATED ON DETAIL 2/M03.
5. CONTRACTOR AND ENGINEER TO FIELD VERIFY EXACT LOCATIONS FOR INSTALLATION OF NEW 4" DIA ODOR CONTROL DUCTS. CONTRACTOR TO INSTALL DAMPERS 2 TO 3 FEET ABOVE FLOOR ELEVATION AT EACH ODOR DUCT DROP LEG.
6. CONTRACTOR TO TIE INTO EXISTING 16" INTAKE.
7. CONTRACTOR TO COORDINATE WITH ODOR EQUIPMENT MANUFACTURER TO REHABILITATE EXISTING ODOR CONTROL SYSTEM AS SPECIFIED IN 11395A.
8. FLEXIBLE CONNECTION TO BE PROVIDED SIMILAR TO DETAIL 1/M03.

REV	DATE	BY	DESCRIPTION

DESIGNED AVM
DRAWN TJD
CHECKED VC
DATE FEBRUARY 2023

3/28/24

carollo®
2056 VISTA PARKWAY, SUITE 400
WEST PALM BEACH, FL 33411
PHONE: 561-868-6403 FAX: 561-868-6401
CA 00008571

CITY OF STUART

WRF HEADWORKS REHABILITATION - PHASE 1

MECHANICAL

HEADWORKS PLANS

VERIFY SCALES
BAR IS ONE INCH ON ORIGINAL DRAWING
0 1"
IF NOT ONE INCH ON THIS SHEET, ADJUST SCALES ACCORDINGLY

JOB NO. 201076
DRAWING NO. M02
SHEET NO. 16 OF 29

PROJECT NO. 201076-100000 FILE NAME: 20107600M02.dgn

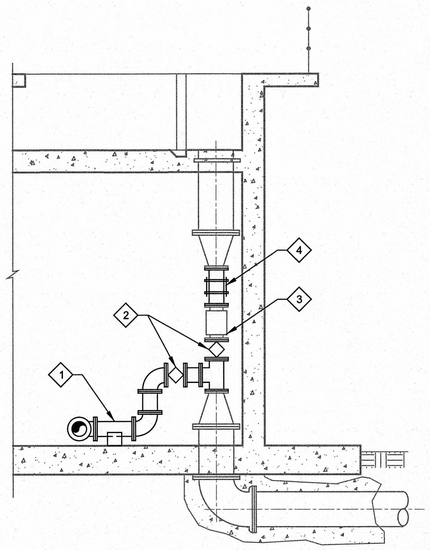

C SECTION
M02
SCALE: 1/4" = 1'-0"
FILE: 20107600M0301

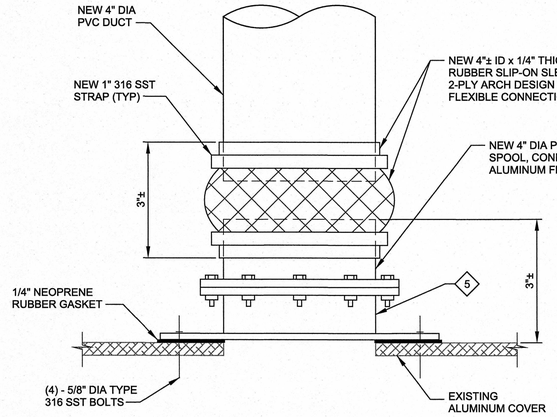

NOTES:

1. HARDWARES/FASTENERS: ALL NUTS, BOLTS, AND WASHERS SHALL BE 316 SST.
2. PROVIDE 1/8" THICK EPDM GASKET BETWEEN FLANGES (TYP).

1 DETAIL
-
SCALE: NO SCALE
FILE: 20107600M0401

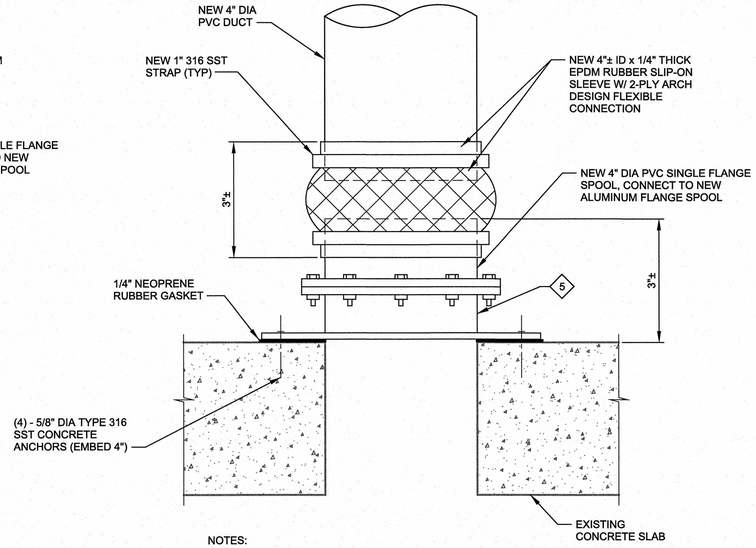

NOTES:

1. HARDWARES/FASTENERS: ALL NUTS, BOLTS, AND WASHERS SHALL BE 316 SST.
2. PROVIDE 1/8" THICK EPDM GASKET BETWEEN FLANGES (TYP).

2 DETAIL
-
SCALE: NO SCALE
FILE: 20107600M0401

KEY NOTES:

1. ALL PIPES AND FITTINGS TO BE DIP FROM INFLUENT RISER TO AE1/AE2 SPLIT TEE OUTSIDE HW STRUCTURE (NOT SHOWN). PIPING AND FITTINGS WILL BE COATED ACCORDING TO SPECIFICATION 15211.
2. INSTALL NEW 10" PLUG VALVE.
3. RE-INSTALL EXISTING 10" FLOW METER.
4. INSTALL NEW 10" RESTRAINED FLEXIBLE COUPLING.
5. DUCT MANUFACTURER TO COORDINATE WITH COVER PLATE MANUFACTURER TO PROVIDE A NEW ALUMINUM RAISED FLANGE SPOOL ASSEMBLY FOR CONNECTION TO NEW PVC DUCT. SUBMIT INSTALLATION DETAILS FOR REVIEW AND APPROVAL.

REV	DATE	BY	DESCRIPTION

DESIGNED AVM
DRAWN TJD
CHECKED VC
DATE FEBRUARY 2023

3/20/24

carollo®
2056 VISTA PARKWAY, SUITE 400
WEST PALM BEACH, FL 33411
PHONE: 561-868-6403 FAX: 561-868-6401
CA 00008571

CITY OF STUART

WRF HEADWORKS REHABILITATION - PHASE 1

MECHANICAL

HEADWORKS
SECTIONS AND DETAILS

VERIFY SCALES
BAR IS ONE INCH ON ORIGINAL DRAWING
0 1"
IF NOT ONE INCH ON THIS SHEET, ADJUST SCALES ACCORDINGLY

JOB NO. 201076
DRAWING NO. M03
SHEET NO. 17 OF 29

PROJECT NO. 201076-100000 FILE NAME: 20107600M03.dgn

Plot Date: 24-FEB-2023 9:42:32 AM
User: svcPW
PlotScale: 1:1
DesignScript: Carollo_Std_Pen_v0905.pen
ColorTable: gshade.ctb
Model: Layout1
LAST SAVED BY: TDietz

ELECTRICAL PLAN/LAYOUT

SYMBOL	DESCRIPTION
TTC	TELEPHONE TERMINAL CABINET
	TERMINAL JUNCTION BOX
	ELECTRICAL EQUIPMENT
X	CEILING MOUNTED DOWNLIGHT LUMINAIRE - SEE SCHEDULE FOR TYPE
X	FLOURESCENT LUMINAIRE, SURFACE OR LAY IN TYPE SEE SCHEDULE FOR TYPE
X	LUMINAIRE AND POLE - SEE SCHEDULE FOR TYPE
X	WALL MOUNTED LUMINAIRE - SEE SCHEDULE FOR TYPE
X	FLOOD LIGHTS - AIM IN THE DIRECTION SHOWN SEE SCHEDULE FOR TYPE
X	EXIT LIGHTS - SOLID SECTION IS DIRECTION OF FACE SEE SCHEDULE FOR TYPE
X	EMERGENCY LIGHT WITH BATTERY PACK SEE SCHEDULE FOR TYPE
	LIGHTING FIXTURE POWER AND SWITCHING LEGEND
X Y Z (TYP)	X=FIXTURE TYPE Y=PANEL-CIRCUIT BRKR Z=SWITCH IF NO Z INDICATED, CONNECT DIRECTLY TO CIRCUIT BREAKER.
[B2] LPA-2	CONDUIT/CONDUCTOR - REFER TO CIRCUIT SCHEDULE
	HOME RUN - PANEL AND CIRCUIT NUMBER SHOWN
	EXPOSED CONDUIT AND CONDUCTORS*
	UNDERGROUND CONDUIT AND CONDUCTORS* NOTE: * ALL UNMARKED CONDUIT RUNS CONSIST OF 2#12, 1#12G IN 3/4"C.
YCX	YARD CONDUIT. REFER TO YARD CONDUIT SCHEDULE
	DIRECT BURIED CONDUIT
	CONDUIT, STUBBED AND CAPPED AS SHOWN
G	GROUND WIRE, 4/O UNLESS OTHERWISE NOTED
	6 FOOT GROUND WIRE PIGTAIL, 4/O UNLESS OTHERWISE NOTED
	GROUND ROD - 5/8" x 20' COPPER CLAD UNLESS OTHERWISE NOTED. COUPLING TWO 10' RODS IS ACCEPTABLE.
	GROUND TEST WELL, SEE DETAIL
S	WALL SWITCH: 2- DOUBLE POLE, 3- THREE WAY, 4- FOUR WAY, WP- WEATHERPROOF, P- PILOT LIGHT, K- KEY OPERATED, D- DIMMER, CRE- CORROSION RESISTANT
	CONVENIENCE RECEPTACLE - 20A DUPLEX UNLESS SPECIFIED OTHERWISE WP- WEATHERPROOF, C- CLOCK HANGER, TL- TWIST LOCK, CRE- CORROSION RESISTANT, GFI-GROUND FAULT INTERRUPTER
	CONVENIENCE RECEPTACLE - 20A QUADROPLEX UNLESS SPECIFIED OTHERWISE
	CONVENIENCE RECEPTACLE - 20A DUPLEX UNLESS SPECIFIED OTHERWISE. LOCATED ABOVE COUNTER TOP GFI-GROUND FAULT INTERRUPTER
	CONVENIENCE RECEPTACLE - 20A DUPLEX UNLESS SPECIFIED OTHERWISE. MOUNTED FLUSH IN FLOOR.
30	RECEPTACLE, SPECIAL PURPOSE - AMPERAGE AS INDICATED.
	TELEPHONE/DATA RECEPTACLE (OUTLET BOX, 18" AFF) W - WALL MOUNTED, 54" AFF
	TELEPHONE/DATA RECEPTACLE MOUNTED FLUSH IN FLOOR
J	JUNCTION BOX NEMA 12 ENCLOSURE UNLESS INDICATED OTHERWISE. 4X = NEMA 4X SS
F	FIRE ALARM PULL STATION
F	FIRE ALARM HORN/STROBE LIGHT
F	FIRE ALARM STROBE LIGHT
FACP	FIRE ALARM CONTROL PANEL
FAAP	FIRE ALARM ANNUNCIATOR PANEL
CAM X	SURVEILLANCE CAMERA X - 90, 180 OR 360 CAMERA
DS	SECURITY SYSTEM DOOR SWITCH

SYMBOL	DESCRIPTION
SD	FIRE ALARM SMOKE DETECTOR EC- MOUNTED TO EXPOSED CEILING H- HARSH ENVIROMENT RATED
HD	FIRE ALARM HEAT DETECTOR EC- MOUNTED TO EXPOSED CEILING
BD R	BEAM DETECTOR, T=TRANSMITTER, R=RECEIVER
SD D	DUCT SMOKE DETECTOR
RTU	REMOTE TELEMETRY UNIT
CR	SECURITY CARD READER

ABBREVIATIONS

ABBREVIATIONS	DESCRIPTION
A	AMMETER, AMPERE
AC	ALTERNATING CURRENT
AF	AMPERE FRAME
AFD	ADJUSTABLE FREQUENCY DRIVE
AFF	ABOVE FINISHED FLOOR
AFG	ABOVE FINISHED GRADE
AS	AMMETER SWITCH, AMPERE SENSOR
ASU	AIR SUPPLY UNIT
ATS	AUTOMATIC TRANSFER SWITCH
BC	BYPASS CONTACTOR
BRKR	BREAKER
C	CONDUIT, CONTACTOR
CB	CIRCUIT BREAKER
CKT	CIRCUIT
CMS	COMBINATION MOTOR STARTER
CPT	CONTROL POWER TRANSFORMER
CR	CONTROL RELAY
CRE	CORROSION RESISTANT
CT	CURRENT TRANSFORMER
DC	DIRECT CURRENT
DIV	DIVISION
DP	DISTRIBUTION PANEL (480V)
EF	EXHAUST FAN
EG	ELECTRICAL GROUND
ETM	ELAPSED TIME METER
EXST	EXISTING
FDR	FEEDER
F, FU	FUSE
FI	FLOW INDICATOR
FLR	FLOOR
FLUOR	FLUORESCENT
FM	FLOW METER
FO	FIBER OPTIC
FS	FLOAT SWITCH, FLOW SWITCH
FT	FLOW TRANSMITTER
FUT	FUTURE
FVNR	FULL VOLTAGE NON-REVERSING STARTER
G	GREEN, GROUND
GEN	GENERATOR
GFI	GROUND FAULT INTERRUPTER
GFR	GROUND FAULT RELAY
GND	GROUND
HH	HANDHOLE
HID	HIGH INTENSITY DISCHARGE
HOA	HAND/OFF/AUTO
HOR	HAND/OFF/REMOTE
HPS	HIGH PRESSURE SODIUM
HVAC	HEATING, VENTILATING & AIR CONDITIONING
IC	INTERRUPTING CAPACITY
I & C	INSTRUMENTATION AND CONTROL
IMH	INSTRUMENTATION MANHOLE
INST	INSTANTANEOUS
IP	INSTRUMENT PANEL (PANELBOARD)
J, J-BOX	JUNCTION BOX
K	KEY INTERLOCK
KK	KIRK KEY INTERLOCK
LA	LIGHTNING ARRESTER
LC	LIGHTING CONTACTOR
LP	LIGHTING PANEL (PANELBOARD)
LR	LOCAL/REMOTE, LATCHING RELAY
LS	LIMIT SWITCH
LT FLEX	LIQUID TIGHT FLEX CONDUIT
LTG	LIGHTING
M	MAGNETIC CONTACTOR COIL OR MOTOR
MA	MILLIAMPS

ABBREVIATIONS	DESCRIPTION
MCB	MAIN CIRCUIT BREAKER
MCC	MOTOR CONTROL CENTER
MDP	MAIN DISTRIBUTION PANEL
MERC	MERCURY VAPOR
MH	MOTOR HEATER, MANHOLE
MLO	MAIN LUGS ONLY
MPZ	MINI POWER ZONE
MPR	MOTOR PROTECTION RELAY
MS	MOTOR STARTER
MSC	MANUFACTURER SUPPLIED CABLE
MT	MOUNT
MTD	MOTOR TEMPERATURE DETECTOR
N	NEUTRAL
NC	NORMALLY CLOSED
NEMA	NATIONAL ELECTRIC MANUFACTURER'S ASSOCIATION
NO	NORMALLY OPEN
NP	NAMEPLATE
NTS	NOT TO SCALE
OL	OVERLOAD RELAY
OLM	OPTICAL LINK MODULE
P	POLE
PB	PULL BOX
PC	PHOTOCELL
PH	PHASE
PM	PHASE MONITOR,POWER METER
PNL	PANEL
PP	POWER PANEL (480VAC)
PR	PAIR
PS	PRESSURE SWITCH
PT	POTENTIAL TRANSFORMER
PVC	POLYVINYL CHLORIDE CONDUIT
RCPT	RECEPTACLE
RMS	ROOT MEAN SQUARE
RS	RIGID STEEL CONDUIT
RGS	RIGID GALVANIZED STEEL CONDUIT
RTU	REMOTE TELEMETRY UNIT
SC	SURGE CAPACITOR
SF	SUPPLY FAN
SH	SPACE HEATER
S/N	SOLID NEUTRAL
SPD	SURGE PROTECTION DEVICE
SSRVS	SOLID STATE REDUCED VOLTAGE STARTER
SS	STAINLESS STEEL
SV	SOLENOID VALVE
SW	SWITCH
SWBD	SWITCHBOARD
SWGR	SWITCHGEAR
SYM	SYMMETRICAL
T	THERMOSTAT
TB	TERMINAL BOARD
TDR	TIME DELAY RELAY
TJB	TERMINAL JUNCTION BOX
TS	THERMAL SWITCH
TSP	TWISTED SHIELDED PAIR
TYP	TYPICAL
UPS	UNINTERRUPTIBLE POWER SUPPLY
UVR	UNDER VOLTAGE RELAY
V	VOLTMETER, VOLT
VFD	VARIABLE FREQUENCY DRIVE
VS	VOLTMETER SWITCH
W	WATT
WHD	WATTHOUR DEMAND METER
WP	WEATHERPROOF
XFMR	TRANSFORMER

ONE LINE DIAGRAMS, RISER DIAGRAMS AND SCHEMATICS

SYMBOL	DESCRIPTION
5	MOTOR, SQUIRREL CAGE INDUCTION UNLESS OTHERWISE NOTED - HORSEPOWER INDICATED
	OVERLOAD RELAY HEATER
1	MAGNETIC STARTER WITH NEMA SIZE INDICATED
M	MOTOR CIRCUIT PROTECTOR, MAGNETIC, 3 POLE UNLESS INDICATED OTHERWISE.
400	CIRCUIT BREAKER, THERMAL MAGNETIC TRIP SHOWN, 3 POLE UNLESS INDICATED OTHERWISE.
400 225	FUSED SWITCH, SWITCH AND FUSE CURRENT RATING INDICATED, 3 POLE UNLESS INDICATED OTHERWISE.
100	SWITCH - CURRENT RATING INDICATED, 3 POLE UNLESS INDICATED OTHERWISE.
400 600	DRAWOUT CIRCUIT BREAKER, LOW VOLTAGE 600= FRAME RATING, 400=TRIP SETTING
1200 1200	DRAWOUT CIRCUIT BREAKER, MEDIUM VOLTAGE 1200= FRAME RATING, 1200=TRIP SETTING
600 400	DRAWOUT FUSED SWITCH, LOW OR MEDIUM VOLTAGE 600= FRAME RATING, 400=FUSE RATING
(3)	CURRENT TRANSFORMER, NUMBER OF WINDINGS INDICATED
480-120 /208V 15 KVA, 3Ø K-4 RATED	TRANSFORMER, VOLTAGES, PHASE AND RATING INDICATED AS APPLICABLE
	LIGHTNING ARRESTER
	CAPACITOR OR SURGE CAPACITOR
M	UTILITY METER
G	GENERATOR
X 0-600V	METER SCALE RANGE SHOWN IF REQUIRED A - AMPS, PM - PHASE MONITOR V - VOLTS, P - POWER METER
	FUSE
SPD	SURGE PROTECTION DEVICE
	GROUND
CPT 120V	CONTROL TRANSFORMER
GFR	GROUND FAULT RELAY WITH C.T.
	PUSH-BUTTON SWITCH, MOMENTARY CONTACT, NORMALLY OPEN
	PUSH-BUTTON SWITCH, MOMENTARY CONTACT, NORMALLY CLOSED
	PUSH BUTTON SWITCH, MAINTAINED CONTACTS WITH MECHANICAL INTERLOCK
	REMOTE DEVICE
A	INDICATING LIGHT - LETTER INDICATES COLOR A - AMBER, G - GREEN B - BLUE, R - RED C - CLEAR, W - WHITE
A	PUSH TO TEST AND CONNECT INDICATING LIGHT SCHEMATIC DIAGRAMS ONLY A - AMBER, G - GREEN B - BLUE, R - RED C - CLEAR, W - WHITE

SYMBOL	DESCRIPTION
S M	MANUAL MOTOR STARTER SWITCH, NEMA 4X SS UNLESS OTHERWISE NOTED. NUMBER OF POLES AS REQUIRED
PB 4X	PUSH-BUTTON STATION, NEMA 12 ENCLOSURE UNLESS INDICATED OTHERWISE. 4X = NEMA 4X 316 STAINLESS STEEL ENCLOSURE. SEE CONTROL DIAGRAMS FOR TYPE PUSH BUTTON REQUIRED
30 4X	NONFUSED DISCONNECT SWITCH, SIZE INDICATED, 3 POLE UNLESS INDICATED OTHERWISE, NEMA 12 ENCLOSURE, 4X = NEMA 4X 316 STAINLESS STEEL
F 60 40 4X	FUSED DISCONNECT SWITCH, SIZE INDICATED (60 = SWITCH RATING: 40 = FUSE RATING) 3 POLE UNLESS INDICATED OTHERWISE, NEMA 12 ENCLOSURE, 4X = NEMA 4X 316 STAINLESS STEEL
LC 30 4X	LIGHTING CONTACTOR, CURRENT RATING INDICATED, NEMA 12 ENCLOSURE UNLESS INDICATED OTHERWISE. SEE CONTROL DIAGRAM FOR NUMBER OF POLES. 4X = NEMA 4X 316 STAINLESS STEEL
2 4X	MAGNETIC STARTER, NEMA SIZE INDICATED, NEMA 12 ENCLOSURE, UNLESS INDICATED OTHERWISE. SEE CONTROL DIAGRAM. 4X = NEMA 4X 316 STAINLESS STEEL
2 4X	COMBINATION (FUSE OR CIRCUIT BREAKER AS INDICATED). MAGNETIC STARTER, NEMA SIZE INDICATED, NEMA 12 ENCLOSURE UNLESS INDICATED OTHERWISE. SEE CONTROL SCHEMATIC DIAGRAM. 4X = NEMA 4X 316 STAINLESS STEEL
	ELECTRIC RESISTANCE HEATER
ETM	ELAPSED TIME METER
CRX	CONTACT - NORMALLY OPEN WITH COIL INDICATED
CRX	CONTACT - NORMALLY CLOSED WITH COIL INDICATED
CRX	CONTROL RELAY, X=SEQUENTIAL NUMBER
LRX (L)	LATCHING RELAY, X=SEQUENTIAL NUMBER L - LATCH, U - UNLATCH
TDX NOTC	TIME DELAY RELAY, X=SEQUENTIAL NUMBER NOTC=NORMALLY OPEN TIMED CLOSED NOTO=NORMALLY OPEN TIMED OPEN AFTER CLOSE NCTO=NORMALLY CLOSED TIMED OPEN NCTC=NORMALLY CLOSED TIMED CLOSED AFTER OPEN
	TEMPERATURE
	OPENS ON RISING TEMPERATURE, CLOSES ON FALLING TEMPERATURE
	CLOSES ON RISING TEMPERATURE, OPENS ON FALLING TEMPERATURE
H O A XOO OOX	SELECTOR SWITCH: MAINTAINED CONTACT WITH CONTACT POSITION INDICATED, CHART IDENTIFIES OPERATION

POSITION			
CKT.	HAND	OFF	AUTO
1	X	O	O
2	O	O	X

X - CLOSED CONTA
O - OPEN CONTACT

GENERAL

SYMBOL	DESCRIPTION
	CONNECTION POINT TO EQUIPMENT SPECIFIED, FURNISHED AND INSTALLED UNDER OTHER SECTIONS. RACEWAY, CONDUCTOR AND CONNECTION IN THIS SECTION.
1"C,2#12,1#12G 1"C,1-25/C TYPE 1	INDICATES RACEWAY AND CIRCUIT CONDUCTORS. FIRST NUMBER IS RACEWAY SIZE. THE FOLLOWING NUMBERS ARE THE CONDUCTOR QUANTITIES, SIZES, AND TYPES.
	DEMOLITION TO BE REMOVED OR DELETED

LINE WEIGHT

NEW

EXISTING

NOTE:

THIS IS A STANDARD LEGEND SHEET. SOME SYMBOLS OR ABBREVIATIONS MAY APPEAR ON THIS SHEET AND NOT BE UTILIZED ON PROJECT.

REV	DATE	BY	DESCRIPTION
			FINAL DESIGN SUBMITTAL

DESIGNED ADS
DRAWN MDG
CHECKED ADS
DATE FEBRUARY 2023

ALEXANDAR D. STOJANOVIC LICENSE No 60269 STATE OF FLORIDA PROFESSIONAL ENGINEER 05/28/24

ADS Engineering
4701 N FEDERAL HWY, STE 390
POMPANO BEACH, FL 33064
PHONE (561) 210-5715

carollo
2056 VISTA PARKWAY, SUITE 400
WEST PALM BEACH, FL 33411
PHONE: 561-868-6403 FAX: 561-868-6401
CA 00008571

CITY OF STUART

WRF HEADWORKS REHABILITATION - PHASE 1

ELECTRICAL

LEGEND

VERIFY SCALES
BAR IS ONE INCH ON ORIGINAL DRAWING
0 1"
IF NOT ONE INCH ON THIS SHEET, ADJUST SCALES ACCORDINGLY

JOB NO. 201076
DRAWING NO. GE01
SHEET NO. XX OF XX

LAST SAVED BY: ADS

PROJECT NO. 201076 FILE NAME: 00GE01 - Legend.dwg

GENERAL NOTES AND SPECIFICATIONS:

1. NOT USED.
2. THE CONTRACTOR SHALL PROVIDE ALL MATERIALS AND LABOR TO INSTALL THE ELECTRICAL SYSTEMS AS INDICATED ON THE DRAWINGS. ITEMS NOT SHOWN BUT OBVIOUSLY NECESSARY FOR COMPLETION OF THE WORK SHALL BE INCLUDED.
3. THE INSTALLATION SHALL BE IN ACCORDANCE WITH THE NATIONAL ELECTRICAL CODE 2017 (NFPA 70), ELECTRICAL SAFETY IN THE WORKPLACE (NFPA 70E), ALL LOCAL COUNTY CODES AND LATEST FLORIDA BUILDING CODE.
4. THE CONTRACTOR SHALL OBTAIN ALL NECESSARY PERMITS TO INCLUDE, BUT ARE NOT LIMITED TO, INSPECTIONS AND APPROVALS AND TO INCLUDE ALL FEES AS PART OF HIS BID IF NOT OTHERWISE NOTED.
5. THE CONTRACTOR SHALL COORDINATE HIS WORK WITH THE ENGINEER AND THE OWNER.
6. THE CONTRACTOR SHALL, BEFORE SUBMITTING HIS BID, VISIT THE SITE OF THE PROJECT AND BECOME FAMILIAR WITH THE EXISTING CONDITIONS. NO ALLOWANCE WILL BE MADE FOR EXISTING CONDITIONS OR FAILURE OF THE CONTRACTOR TO OBSERVE THEM.
7. ALL EQUIPMENT AND MATERIAL SHALL BE NEW AND U.L. LISTED WHERE APPLICABLE.
8. THE CONTRACTOR IS RESPONSIBLE TO TEST ALL SYSTEMS INSTALLED OR MODIFIED UNDER THIS PROJECT AND REPAIR OR REPLACE ALL DEFECTIVE WORK TO THE SATISFACTION OF THE ENGINEER AND OWNER.
9. ALL EQUIPMENT FURNISHED AND INSTALLED BY THE CONTRACTOR SHALL BE GUARANTEED AGAINST DEFECTS IN MATERIAL AND WORKMANSHIP FOR A PERIOD OF ONE YEAR FROM DATE OF ACCEPTANCE.
10. ALL CONDUCTORS SHALL BE COPPER. NO ALUMINUM ALLOWED UNLESS SPECIFICALLY INDICATED ON DRAWINGS.
11. SHOP DRAWINGS SHALL BE SUBMITTED FOR ALL ELECTRICAL & CONTROL EQUIPMENT AND MATERIAL.
12. ALL CONTROL PANELS SHALL BE CONSTRUCTED BY A UL 508A APPROVED PANEL VENDOR AND SHALL BEAR A UL 508A LABEL ON THE PANEL.
13. THE DRAWINGS ARE NOT INTENDED TO SHOW THE EXACT LOCATION OF CONDUIT RUNS. THESE ARE TO BE COORDINATED WITH THE OTHER TRADES SO THAT CONFLICTS ARE AVOIDED PRIOR TO INSTALLATIONS.
14. ALL LOCATIONS OF EQUIPMENT, PANELS ETC. ARE SHOWN FOR ILLUSTRATION PURPOSES. CONTRACTOR SHALL VERIFY AND COORDINATE EXACT LOCATION AND SIZE WITH ALL SUBCONTRACTORS AND EQUIPMENT SUPPLIERS PRIOR TO ANY INSTALLATION AND THEN INSTALL AS SUCH WITH CORRESPONDING CONDUIT STUB-UPS.
15. SEE OTHER DISCIPLINE DRAWINGS FOR COORDINATION OF ALL DRAWINGS. ANY CONFLICTS SHALL BE BROUGHT TO THE ENGINEER'S ATTENTION AND MOVEMENT OF CONDUITS OR OTHER ELECTRICAL EQUIPMENT SHALL BE ACCOMPLISHED WITHOUT ANY ADDITIONAL COST FOR THE OWNER.
16. LOCATIONS OF MANHOLES, HANDHOLES AND PULL BOXES ARE APPROXIMATE. CONTRACTOR SHALL COORDINATE EXACT LOCATION WITH EXISTING AND NEW PIPING OR CONDUIT AND ADJUST ACCORDINGLY.
17. NOT ALL CONDUITS SHOWN ON RISER AND ONE-LINE DIAGRAMS ARE SHOWN ON BUILDING LAYOUTS. CONTRACTOR SHALL SUPPLY ALL CONDUITS AND CABLES AS SHOWN ON RISER AND ONE-LINE DIAGRAMS.
18. ALL CIRCUITS SHALL BE IDENTIFIED IN JUNCTION BOXES, PULL BOXES, CONTROL PANELS, PANELBOARDS, LIGHTING POLES, CONTROLLERS AND SERVICE POINTS. IDENTIFICATION SHALL MATCH PANELBOARD SCHEDULES.
19. EXPOSED RUNS OF CONDUITS SHALL BE INSTALLED WITH RUNS PARALLEL OR PERPENDICULAR TO WALLS, STRUCTURAL MEMBERS OR INTERSECTIONS OF VERTICAL PLANES AND CEILINGS, WITH RIGHT ANGLE TURNS CONSISTING OF SYMMETRICAL BENDS OR PULL BOXES AS INDICATED ON THE DRAWINGS. BENDS AND OFFSETS SHALL BE AVOIDED WHERE POSSIBLE.
20. INSTRUMENTATION IS LOW VOLTAGE SIGNALS SUCH AS 4-20MA, TELEPHONE COMMUNICATION, FIRE ALARM COMMUNICATION. POWER CONDUIT SHALL ONLY CROSS INSTRUMENTATION CONDUIT PERPENDICULARLY AT RIGHT ANGLES WITH 6" SEPARATION.
21. CONDUCTOR PULLING TENSIONS SHALL NOT EXCEED MANUFACTURER'S RECOMMENDATION. CONTRACTOR SHALL INSTALL PULL BOXES TO MEET MANUFACTURER'S REQUIREMENTS.
22. MINIMUM DISTANCE ALLOWED BETWEEN POWER CONDUITS AND INSTRUMENTATION CONDUITS SHALL BE:

VOLTAGE	DISTANCE
4160V - 15KV TO INST. CONDUIT	3 FT
480V - 600V TO INST CONDUIT	2 FT
120V TO INST. CONDUIT	1 FT

23. THE CONTRACTOR SHALL BE RESPONSIBLE FOR ALL CONDUIT AND WIRING INSTALLATION FOR ALL VENDOR PROVIDED EQUIPMENT (PACKAGE SYSTEMS). IF THE SHOP DRAWINGS DIFFER FROM THE DESIGNED FACILITIES, THE CONTRACTOR SHALL REDESIGN THE FACILITIES AND SUBMIT THE REVISED DESIGN FOR THE ENGINEER'S APPROVAL ALONG WITH THE SHOP DRAWINGS. THERE SHALL BE NO ADDITIONAL COST TO THE OWNER FOR THE REDESIGN NOR FOR ANY ADDITIONAL CONDUITS AND WIRING. DURING SUBMITTAL THE CONTRACTOR SHALL VERIFY ALL SUPPLIED BREAKER SIZES FOR ALL PACKAGED SYSTEMS SUCH AS HVAC, EXHAUST FANS, MIXERS, CHEMICAL PUMPS ETC. AND MODIFY ALL BREAKERS IN MCC'S AND PANELBOARDS ACCORDINGLY WITHOUT ANY ADDITIONAL COST TO THE OWNER.
24. ALL EXCAVATIONS FOR CONDUITS, HANDHOLES, MANHOLES AND PULLBOXES NEAR EXISTING PIPING, CONDUIT AND EQUIPMENT SHALL BE HAND EXCAVATED AND COORDINATED WITH THE OWNER.
25. MINIMUM DEPTH FROM TOP OF DUCT BANKS OR CONDUITS TO FINISHED GRADE SHALL BE 24" UNLESS OTHERWISE NOTED.
26. COLORED WARNING TAPE 6" WIDE SHALL BE INSTALLED 8" BELOW FINISHED GRADE DIRECTLY ABOVE ALL UNDERGROUND YARD CONDUITS ACCORDING TO THE FOLLOWING SCHEDULE:
    POWER: RED
    ALL OTHER CONDUITS: GREEN
27. CONTRACTOR SHALL RESTORE SIDEWALKS, ROADWAYS, SOD AND SPRINKLER SYSTEM PIPING TO MATCH EXISTING, AFTER THE COMPLETION OF THE CONDUIT AND PULLBOX INSTALLATION.
28. GROUNDING SHALL BE INSTALLED IN ACCORDANCE WITH NEC 2017, ARTICLE 250. THE GROUNDING SYSTEM TEST SHALL NOT EXCEED A 48 HOUR SPAN DRY RESISTANCE OF 10 OHMS. ADDITIONAL GROUNDING TO MEET THIS REQUIREMENT SHALL BE INSTALLED AT NO EXTRA COST. GROUNDING AND BONDING CONNECTIONS SHALL NOT BE PAINTED. ALL GROUNDING CONNECTIONS SHALL BE EXOTHERMIC UNLESS SPECIFICALLY INDICATED OTHERWISE.
29. AN EQUIPMENT GROUND WIRE SIZED PER NEC SHALL BE PULLED IN ALL ELECTRICAL CONDUITS, POWER AND CONTROL, AS SHOWN ON PLANS.
30. ALL ENCLOSURES, TJB, WIREWAY, PULL BOXES (EXCEPT IN-GROUND PULL BOXES AND MANHOLES) ETC. SHALL CONTAIN A GROUNDING BUS. CONNECT ALL RACEWAY BONDS TO THIS BUS VIA GROUNDING BUSHING AND EXTEND BONDING JUMPER FROM THIS BUS TO THE ENCLOSURE.
31. PRIMARY BUILDING GROUNDING SHALL BE AN EMBEDDED GRID OF MINIMUM #4/0 AWG WIRE INSTALLED IN THE FOUNDATION AND AROUND THE BUILDING PERIMETER TO FORM A COMPLETE LOOP. SECONDARY GROUND CONNECTIONS TO ALL METAL EQUIPMENT, HAND RAILS, STRUCTURAL STEEL, CONCRETE PADS, REBAR ETC. SHALL HAVE A MINIMUM #4 STRANDED COPPER CONDUCTOR BONDED USING APPROVED LUGS OR EXOTHERMIC CONNECTIONS. ALL EQUIPMENT GROUNDING CONDUCTORS PENETRATING CONCRETE SLABS OR FINISHED GRADE SHALL HAVE A 72" CONDUCTOR PIGTAIL AT EACH LOCATION FOR CONNECTION TO EQUIPMENT.
32. ALL CONCRETE ENCASED DUCTBANKS SHALL CARRY A MINIMUM #4/0 AWG BARE COPPER GROUND WIRE, OVER THE ENTIRE LENGTH, WHICH SHALL BE CONNECTED TO THE SITE GROUNDING GRID AND GROUND RODS LOCATED CONNECTING MANHOLES, HANDHOLES OR PULL BOXES.
33. CONTRACTOR SHALL CORE DRILL EXISTING CONCRETE WALLS, FLOORS, MANHOLES, HANDHOLES AND PULL BOXES FOR CONDUIT PENETRATIONS. SEAL PENETRATIONS WITH NON-SHRINK GROUT OR APPROPRIATE FIRE RATED DEVICES WHERE APPLICABLE.
34. ALL CONDUITS PENETRATING RATED FIRE WALLS OR RATED FIRE FLOORS SHALL BE INSTALLED WITH U.L. APPROVED DEVICES TO MAINTAIN THE FIRE RATING OF THE WALL OR FLOOR PENETRATED.
35. PROVIDE CONDUIT DUCT SEAL AT ALL CONDUIT ENDS.
36. ALL SPARE CONDUITS SHALL BE SEALED WITH A CAP AT BOTH ENDS AND A PULL STRING INSTALLED WITH IDENTIFICATION ON BOTH ENDS.
37. ALL RECEPTACLES SHALL BE INSTALLED 18" AFF UNLESS OTHERWISE NOTED. LIGHT SWITCHES SHALL BE MOUNTED 48" AFF UNLESS OTHERWISE NOTED.
38. ALL RECEPTACLES WITHIN 6' OF A SINK SHALL BE GFI.
39. FLEXIBLE CONDUITS SHALL BE USED TO TERMINATE ALL MOTORS AND OTHER VIBRATING EQUIPMENT AND SHALL BE BETWEEN 18" AND 3' IN LENGTH.
40. TYPEWRITTEN PANEL SCHEDULES SHALL BE INSTALLED IN EACH PANELBOARD, AND TYPEWRITTEN TERMINAL BLOCK SCHEDULES IN EACH CONTROL CABINET.
41. ALL SPD'S SHALL BE INTEGRAL TO THE NEW EQUIPMENT SHOWN AND SUPPLIED AS ONE UNIT AND ONE U.L. ENTITY.
42. ALL MATERIAL IN DESIGNATED CORROSIVE AREAS SHALL BE NEMA 4X STAINLESS STEEL OR NON-METALLIC.
43. ALL OUTDOOR LIGHTING FIXTURES SHALL BE OF COPPER FREE CONSTRUCTION.
44. ALL REFERENCES TO SS OR STAINLESS STEEL SHALL BE 316 STAINLESS STEEL.
45. CONTRACTOR SHALL BALANCE PANELBOARD LOADS AT THE END OF THE PROJECT.
46. ALL YARD CONDUITS SHALL BE CONCRETE ENCASED UNLESS NOTED OTHERWISE. REFER TO DETAILS DRAWING FOR INSTALLATION DETAILS.
47. ALL CONDUIT CONNECTIONS TO NEMA 4X PANELS/ENCLOSURES SHALL USE MYERS HUBS (OR EQUAL) TO MAINTAIN 4X RATING.
48. CONTRACTOR SHALL PROVIDE FOR A SATISFACTORY NATIONALLY RECOGNIZED TESTING LABORATORY (NRTL) INSPECTION FOR ALTERATIONS TO CONTROL PANELS, ELECTRICAL EQUIPMENT, OR ASSEMBLIES TO MAINTAIN THE ORIGINAL UL RATING.
49. PROVIDE AS-BUILT DRAWINGS AND MANUALS IN ACCORDANCE WITH THE FLORIDA BUILDING CODE 13-413.ABC.2.1 & 13-413.ABC.2.2
50. CONDUCTORS SHALL BE STRANDED COPPER, NO ALUMINUM ALLOWED UNLESS SPECIFICALLY INDICATED ON DRAWINGS. POWER CONDUCTORS SHALL BE XHHW IN WET LOCATIONS OR IN UNDERGROUND RACEWAYS AND SHALL BE THWN/THHN IN DRY LOCATIONS.
51. INSTRUMENTATION AND CONTROL CIRCUITS ORIGINATING FROM CONTROL PANELS CONTAINING A PLC ARE CLASSIFIED AS CLASS 1 POWER-LIMITED CIRCUITS PER NEC ARTICLE 725. CONTROL AND INSTRUMENTATION AND CONTROL CIRCUITS ORIGINATING FROM CONTROL PANELS WITHOUT A PLC OR FROM A MOTOR CONTROL CENTER ARE CLASSIFIED AS CLASS 1 REMOTE CONTROL AND SIGNALING CIRCUITS PER NEC ARTICLE 725.
52. ALL VERTICAL CONDUIT PENETRATIONS FROM CONCRETE SLAB SHALL HAVE A MAINTENANCE PAD TO PREVENT CORROSION.

NOTE:

THE EXISTING ELECTRICAL INFORMATION IS OBTAINED FROM "RECORD DRAWINGS" AND OTHER "AS-BUILT DRAWINGS". CONTRACTOR SHALL VERIFY THE INFORMATION PROVIDED IN THESE DRAWINGS AND ADJUST ACCORDINGLY. ANY CONFLICTS SHALL BE BROUGHT TO THE ENGINEER'S ATTENTION BEFORE SUBMITTING HIS BID.

REV	DATE	BY	DESCRIPTION
			FINAL DESIGN SUBMITTAL

DESIGNED ADS | DRAWN MDG | CHECKED ADS | DATE FEBRUARY 2023

ALEKSANDAR D. STOJANOVIC LICENSE No. 60269 STATE OF FLORIDA PROFESSIONAL ENGINEER 03/28/24

ADS Engineering
4701 N FEDERAL HWY, STE 390
POMPANO BEACH, FL 33064
PHONE (561) 210-5715

carollo
2056 VISTA PARKWAY, SUITE 400
WEST PALM BEACH, FL 33411
PHONE: 561-868-6403 FAX: 561-868-6401
CA 00008571

CITY OF STUART · FLORIDA · INCORPORATED 1914 · "SAILFISH CAPITAL OF THE WORLD"

CITY OF STUART
WRF HEADWORKS REHABILITATION - PHASE 1
ELECTRICAL
NOTES

VERIFY SCALES
BAR IS ONE INCH ON ORIGINAL DRAWING
0 1"
IF NOT ONE INCH ON THIS SHEET, ADJUST SCALES ACCORDINGLY

JOB NO. 201076
DRAWING NO. GE02
SHEET NO. XX OF XX

LAST SAVED BY: ADS

PROJECT NO. 201076 FILE NAME: 00GE02 - Notes.dwg

GROUNDING NOTES

1. CONTRACTOR SHALL INSTALL GROUNDING CONDUCTOR FROM THE GROUNDING GRID TO ALL CONTROL PANELS, PUMPS, DISCONNECTS, TRANSMITTERS, TANKS, ETC.
2. CONTRACTOR SHALL BOND STEEL COLUMNS TO GROUND GRID USING EXOTHERMIC CONNECTIONS.
3. CONTRACTOR SHALL BOND REBAR IN FLOOR TO GROUND GRID USING EXOTHERMIC CONNECTIONS.

LIGHTNING PROTECTION NOTES

1. CONTRACTOR SHALL PROVIDE AND INSTALL NEW LIGHTNING PROTECTION SYSTEM FOR ENTIRE HEADWORK STRUCTURE, NEW CANOPY STRUCTURE, NEW HANDRAILS, ETC., AS PER SPECIFICATION 16670.

AREA CLASSIFICATION NOTES

1. EXTERIOR SPACE ABOVE HEADWORK EQUIPMENT AND HEADWORK OPENINGS THAT IS ENVELOPE OF 18" ABOVE THE GRADE AND EXTENDING 10FT HORIZONTALLY FROM OPENING IS CLASSIFIED CLASS 1 DIV 2. ALL CONDUITS PENETRATING THIS AREA SHALL BE RATED FOR CLASS 1 DIV 2 AND SHALL HAVE CONDUIT SEAL ENTERING AND LEAVING THE BOUNDARY AREA AS REQUIRED PER NEC 501.

KEY NOTES

1. CONTRACTOR SHALL CONNECT NEW EQUIPMENT, CANOPY STRUCTURE, HANDRAILS, ETC. TO NEW GROUNDING GRID AS PER DESIGN. CONTRACTOR SHALL CONNECT NEW GROUNDING GRID TO EXISTING PLANT GROUNDING GRID IF FEASIBLE.

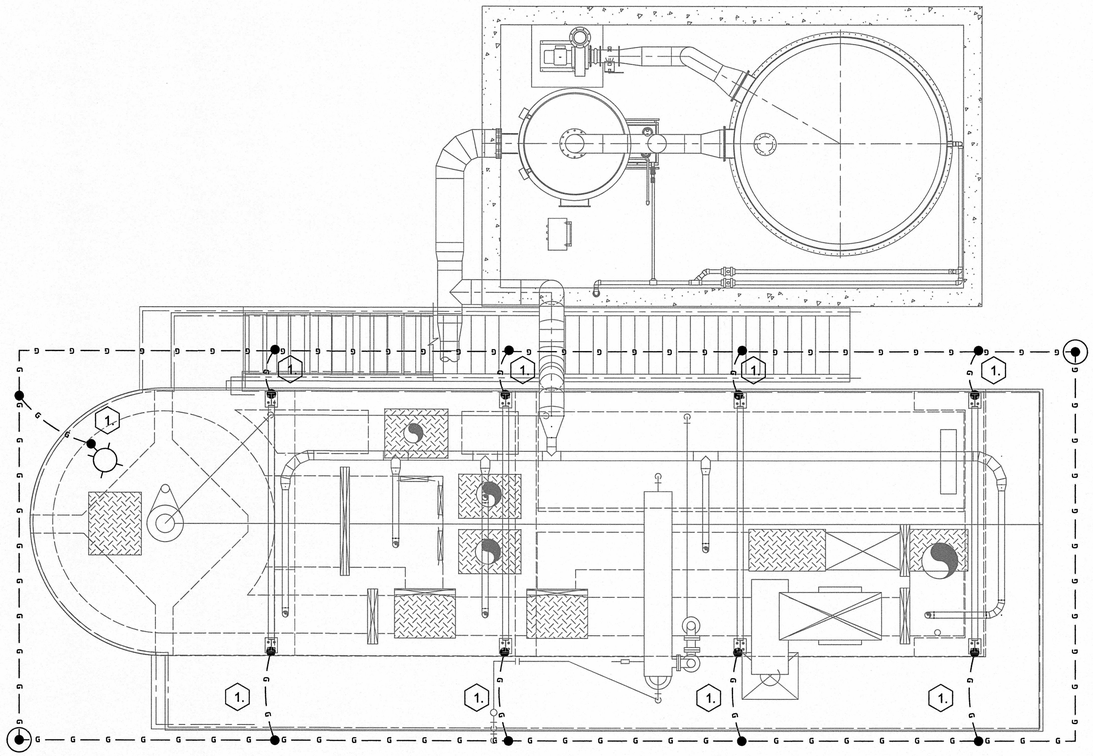

HEADWORKS STRUCTURE GROUNDING PLAN

0 3 6
1/4"=1'-0"

REV	DATE	BY	DESCRIPTION
			FINAL DESIGN SUBMITTAL

DESIGNED ADS
DRAWN MDG
CHECKED ADS
DATE FEBRUARY 2023

ALEKSANDAR D. STOJANOVIC LICENSE No. 60269 03/28/24 STATE OF FLORIDA PROFESSIONAL ENGINEER

ADS Engineering
4701 N FEDERAL HWY, STE 390
POMPANO BEACH, FL 33064
PHONE (561) 210-5715

carollo
2056 VISTA PARKWAY, SUITE 400
WEST PALM BEACH, FL 33411
PHONE: 561-868-6403 FAX: 561-868-6401
CA 00008571

CITY OF STUART
WRF HEADWORKS REHABILITATION - PHASE 1
ELECTRICAL
GROUNDING PLAN

VERIFY SCALES
BAR IS ONE INCH ON ORIGINAL DRAWING
0 1"
IF NOT ONE INCH ON THIS SHEET, ADJUST SCALES ACCORDINGLY

JOB NO. 201076
DRAWING NO. E01
SHEET NO. XX OF XX

LAST SAVED BY: ADS

PROJECT NO. 201076 FILE NAME: E01 - Grounding.dwg

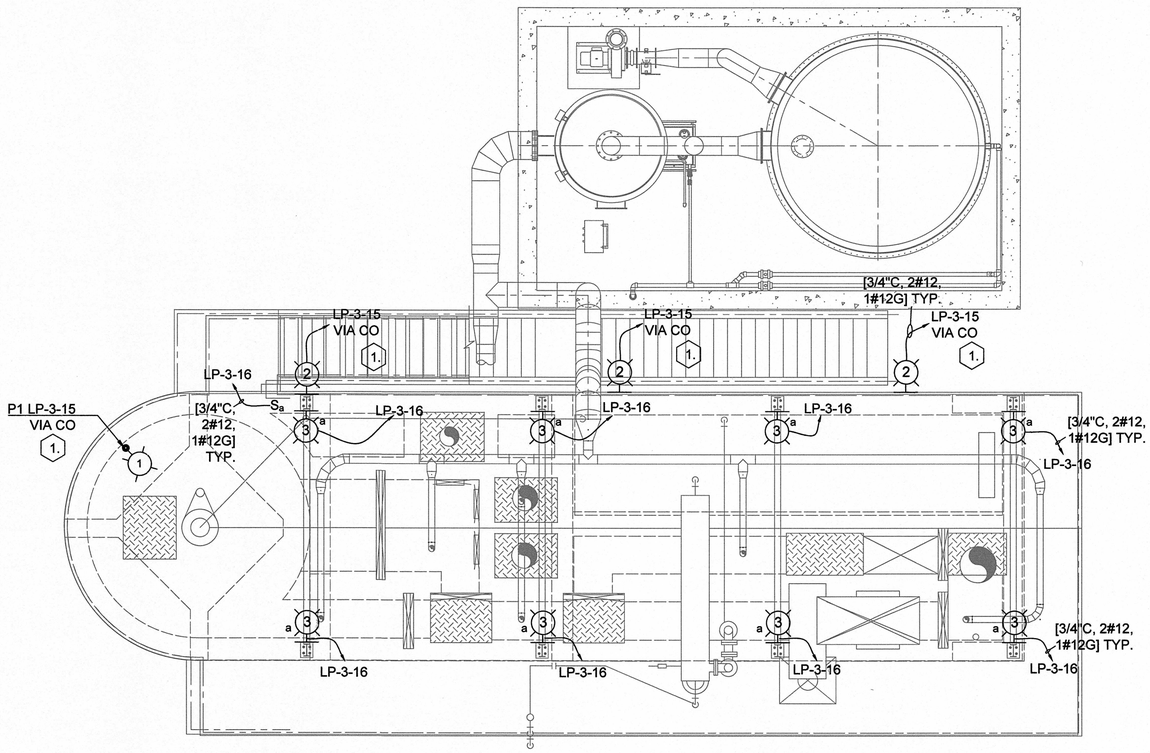

HEADWORKS STRUCTURE LIGHTING PLAN

0 3 6
1/4"=1'-0"

AREA CLASSIFICATION NOTES

1. EXTERIOR SPACE ABOVE HEADWORK EQUIPMENT AND HEADWORK OPENINGS THAT IS ENVELOPE OF 18" ABOVE THE GRADE AND EXTENDING 10FT HORIZONTALLY FROM OPENING IS CLASSIFIED CLASS 1 DIV 2. ALL CONDUITS PENETRATING THIS AREA SHALL BE RATED FOR CLASS 1 DIV 2 AND SHALL HAVE CONDUIT SEAL ENTERING AND LEAVING THE BOUNDARY AREA AS REQUIRED PER NEC 501.

LIGHTING NOTES

1. COMBINING OF NEUTRAL CONDUCTORS FOR LIGHTING SHALL NOT BE ALLOWED. ALL CONDUCTORS LEAVING A CIRCUIT BREAKER IN A PANELBOARD SHALL CARRY A SEPARATE NEUTRAL CONDUCTOR IDENTICAL IN SIZE.
2. ALL CONDUITS OUTSIDE THE BUILDING SHALL BE RECESSED. CONDUITS SHALL NOT PENETRATE CONTAINMENT AREAS IN CHEMICAL ROOMS.
3. BEFORE INSTALLATION COORDINATE LOCATION OF FIXTURES WITH ALL DISCIPLINES TO AVOID CONFLICTS AND MOVE FIXTURES IF NECESSARY AFTER APPROVAL FROM ENGINEER.
4. CONDUIT/CABLES NOT SHOWN ON FACILITY PLAN FOR CLARITY, PROVIDE COMPLETE WORKING LIGHTING SYSTEM. PROVIDE MINIMUM 3/4"C, 2#12, 1#12G.

KEY NOTES

1. CONTRACTOR SHALL CONNECT NEW OUTDOOR LIGHTS TO THE EXISTING LIGHTING CONTACTOR (CO) LOCATED IN HEADWORKS BUILDING ELECTRICAL ROOM, AS INDICATED ON THE DRAWINGS. CONTRACTOR SHALL FIELD INVESTIGATE FOR SPARE CIRCUITS AT EXISTING LIGHTING CONTACTOR AND PROVIDE ALL NECESSARY MODIFICATIONS TO THE EXISTING LIGHTING CONTACTOR TO ACCOMMODATE NEW LIGHTS CONTROL.

REV	DATE	BY	DESCRIPTION
			FINAL DESIGN SUBMITTAL

DESIGNED ADS
DRAWN MDG
CHECKED ADS
DATE FEBRUARY 2023

ALEKSANDAR D. STOJANOVIC LICENSE No. 60269 STATE OF FLORIDA PROFESSIONAL ENGINEER
5/20/24

ADS Engineering
4701 N FEDERAL HWY, STE 390
POMPANO BEACH, FL 33064
PHONE (561) 210-5715

carollo
2056 VISTA PARKWAY, SUITE 400
WEST PALM BEACH, FL 33411
PHONE: 561-868-6403 FAX: 561-868-6401
CA 00008571

CITY OF STUART
WRF HEADWORKS REHABILITATION - PHASE 1
ELECTRICAL
LIGHTING PLAN

VERIFY SCALES
BAR IS ONE INCH ON ORIGINAL DRAWING
0 1"
IF NOT ONE INCH ON THIS SHEET, ADJUST SCALES ACCORDINGLY

JOB NO. 201076
DRAWING NO. E02
SHEET NO. XX OF XX

LAST SAVED BY: ADS

PROJECT NO. 201076 FILE NAME: E02 - Layout No.1.dwg

AREA CLASSIFICATION NOTES

1. EXTERIOR SPACE ABOVE HEADWORK EQUIPMENT AND HEADWORK OPENINGS THAT IS ENVELOPE OF 18" ABOVE THE GRADE AND EXTENDING 10FT HORIZONTALLY FROM OPENING IS CLASSIFIED CLASS 1 DIV 2. ALL CONDUITS PENETRATING THIS AREA SHALL BE RATED FOR CLASS 1 DIV 2 AND SHALL HAVE CONDUIT SEAL ENTERING AND LEAVING THE BOUNDARY AREA AS REQUIRED PER NEC 501.

RECEPTACLE NOTES

1. COMBINING OF NEUTRAL CONDUCTORS FOR RECEPTACLE SHALL NOT BE ALLOWED. ALL CONDUCTORS LEAVING A CIRCUIT BREAKER IN A PANELBOARD SHALL CARRY A SEPARATE NEUTRAL CONDUCTOR IDENTICAL IN SIZE.
2. ALL CONDUITS OUTSIDE THE BUILDING SHALL BE RECESSED. CONDUITS SHALL NOT PENETRATE CONTAINMENT AREAS IN CHEMICAL ROOMS.
3. BEFORE INSTALLATION COORDINATE LOCATION OF RECEPTACLES WITH ALL DISCIPLINES TO AVOID CONFLICTS AND MOVE FIXTURES IF NECESSARY AFTER APPROVAL FROM ENGINEER.
4. CONDUIT/CABLES NOT SHOWN ON FACILITY PLAN FOR CLARITY, PROVIDE COMPLETE WORKING RECEPTACLE SYSTEM. PROVIDE MINIMUM 3/4"C, 2#12, 1#12G.

KEY NOTES

1. RECEPTACLES SHALL BE INSTALLED MINIMUM 30" ABOVE FINISHED FLOOR TO KEEP EQUIPMENT OUTSIDE OF THE CLASSIFIED AREA. PROVIDE CONDUIT RATINGS AND SEALS AS REQUIRED PER NEC.

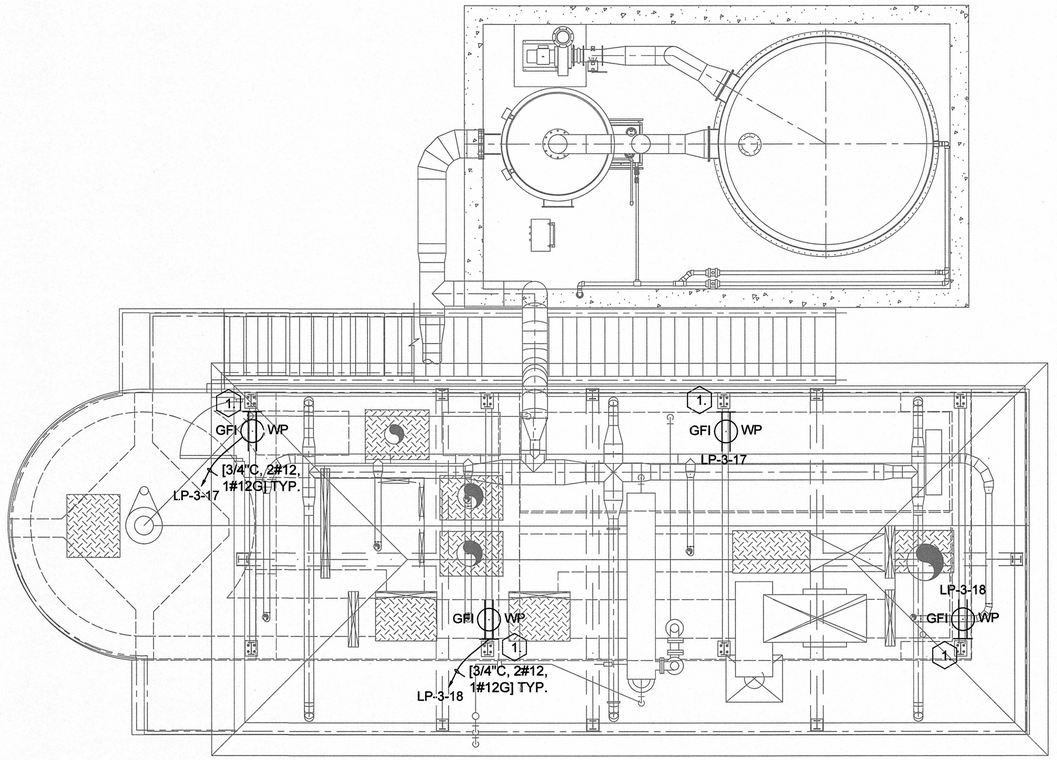

HEADWORKS STRUCTURE RECEPTACLE PLAN

0 3 6
1/4"=1'-0"

REV	DATE	BY	DESCRIPTION
			FINAL DESIGN SUBMITTAL

DESIGNED ADS
DRAWN MDG
CHECKED ADS
DATE FEBRUARY 2023

ALEKSANDAR D. STOJANOVIC LICENSE No. 60269 STATE OF FLORIDA PROFESSIONAL ENGINEER
03/28/24

ADS Engineering
4701 N FEDERAL HWY, STE 390
POMPANO BEACH, FL 33064
PHONE (561) 210-5715

carollo
2056 VISTA PARKWAY, SUITE 400
WEST PALM BEACH, FL 33411
PHONE: 561-868-6403 FAX: 561-868-6401
CA 00008571

CITY OF STUART · FLORIDA · INCORPORATED 1914 · SMALLTOWN CAPITAL OF THE WORLD

CITY OF STUART
WRF HEADWORKS REHABILITATION - PHASE 1
ELECTRICAL
RECEPTACLE PLAN

VERIFY SCALES
BAR IS ONE INCH ON ORIGINAL DRAWING
0 1"
IF NOT ONE INCH ON THIS SHEET, ADJUST SCALES ACCORDINGLY

JOB NO. 201076
DRAWING NO. E03
SHEET NO. XX OF XX

LAST SAVED BY: ADS

PROJECT NO. 20`076 FILE NAME: E03 - Layout No.2.dwg

PANELBOARD LP-3 SCHEDULE

BUS AMPS A	BUS AMPS B	BUS AMPS C	LOAD	POLES	AMPS	BUS				AMPS	POLES	LOAD	BUS AMPS A	BUS AMPS B	BUS AMPS C
			LIGHTS BAR SCREEN	1	20	1	A			2	20	1	LIGHTS DUMPSTER RM			
			LIGHTS - PNL ROOM	1	20	3		B		4	20	1	EXTERIOR LIGHTS			
			LIGHTING CONTACTOR	1	20	5			C	6	20	1	BLOWER PNL			
			FLOW TRANSMITER	1	20	7	A			8	20	1				
			EXHAUST FAN	1	20	9		B		10	20	1	S.POLE LTS			
			RECEPTACLES	1	20	11			C	12	20	1	N.POLE LTS			
			SPARE	1	20	13	A			14	20	1	ODOR CONTROL			
2.0			HEADWORKS OUTSIDE LIGHTS VIA CO	1	20	15		B		16	20	1	HEADWORKS INSIDE LIGHTS	4.0		
	5.0		HEADWORKS EAST RECEPTACLES	1	20	17			C	18	20	1	HEADWORKS WEST RECEPTACLES		5.0	
		0.5	TEMPORARY STRAP-ON FLOWMETER #1	1	20	19	A			20	20	1	TEMPORARY STRAP-ON FLOWMETER #2			0.5
			SPARE	1	20	21		B		22	20	1	SPARE			
			SPARE	1	20	23			C	24	20	1	SPARE			
			SPARE	1	20	25	A			26	20	1	SPARE			
			SPARE	1	20	27		B		28	20	1	SPARE			
			SPARE	1	20	29			C	30	20	1	SPARE			
			SPARE	1	20	31	A			32	20	1	SPARE			
			SPARE	1	20	33		B		34	20	1	SPARE			
			SPARE	1	20	35			C	36	20	1	SPARE			
			SPARE	1	20	37	A			38	30	3	SPARE			
			SPARE	1	20	39		B		40	‖	‖	‖			
			SPARE	1	20	41			C	42	‖	‖	‖			

TOTAL AMPS:	BUS A: 6.0A	BUS B: 10.0A	BUS C: 1.0A		CONNECTED KVA: 4.7KVA	RUNNING KVA:	

RATED VOLTAGE: ■ 120/208 ☐ 480 3 PHASE, 4 WIRE	BRANCH POLES ☐ 12 ☐ 24 ☐ 30 ■ 42 ☐ 54 ☐ 66 ☐ 72		
RATED AMPS: ☐ 100 ☐ 225 ☐ 400 ■ 125	CABINET: ■ SURFACE ☐ FLUSH		
NEUTRAL BUS ☐ 100% ■ 150% ☐ 200%	■ GROUND BUS	☐ HINGED DOOR ■ KEYED DOOR LATCH	LOCATION: HEADWORK ELECTRICAL ROOM
■ CIRCUIT BREAKER (BOLT-IN) BRANCH DEVICES	■ TVSS	ENCLOSURE TYPE: ☐ NEMA 1 ☐ NEMA 3R ☐ NEMA 4X ■ _____	
■ MAIN LUGS ONLY	MAIN 50 AMPS ☐ BREAKER	☐ _____ TO BE GFI BREAKERS	
PANELBOARD MUST BE RATED TO INTERRUPT A SHORT CIRCUIT ISC OF __ AMPS SYMMETRICAL.			
APPROVED MF'RS. SEE SPECIFICATION.	COPPER BUSSES	MAIN LUGS _____ SETS SIZE: _____	

EXISTING PANELBOARD LP-3 SCHEDULE

NOT TO SCALE

LUMINAIRE SCHEDULE

TYPE	VOLTS	DESCRIPTION	MANUFACTURER	CATALOG NO.	LAMPS	MOUNTING	REMARKS
1	120	AREA LIGHT - LED SINGLE LUMINARE, UNIVERSAL 120VAC TYPE II, GLARE/HOUSIDE SHIELD	CREE LIGHTING	ARE-EDG-2M-DA-10-EULS V-350	LED 116W	POLE MOUNT	FURNISH WITH 8' SQUARE POLE
2	120	WALL MOUNTED LUMINAIRE - QSP SERIES	HUBBEL	QSP-30L-4K-035-3-U-WH	LED 39W	WALL/COLUMN MOUNT	
3	120	AREA LIGHT - LED SINGLE LUMINARE, UNIVERSAL 120VAC TYPE II, GLARE/HOUSIDE SHIELD	CREE LIGHTING	ARE-EDG-2M-AA-04-EULB K-350	LED 46W	WALL/COLUMN MOUNT	MOUNT 10' AFF (1.)

NOTE: FOR MOUNTING OF SUSPENDED FIXTURES, USE UNISTRUT RACKS, MINIMUM OF ONE UNISTRUT ALONG THE FIXTURE LAYOUT AND ANOTHER ONE UNISTRUT PERPENDICULAR TO THE FIXTURE. ALL MATERIALS SHALL BE RATED FOR CORROSIVE AREA.

KEY NOTES

(1.) EXACT MOUNTING HEIGHT SHALL BE COORDINATE ON THE FIELD TO AVOID CONFLICTS WITH OTHER DISCIPLINES AND POSSIBLE LIGHT OBSTRUCTION.

REV	DATE	BY	DESCRIPTION

FINAL DESIGN SUBMITTAL

DESIGNED ADS
DRAWN MDG
CHECKED ADS
DATE FEBRUARY 2023

ALEXANDAR D. STOJANOVIC LICENSE No. 60269 STATE OF FLORIDA PROFESSIONAL ENGINEER
03/28/24

ADS Engineering
4701 N FEDERAL HWY STE 390
POMPANO BEACH, FL 33064
PHONE (561) 210-5715

carollo
2056 VISTA PARKWAY, SUITE 400
WEST PALM BEACH, FL 33411
PHONE: 561-868-6403 FAX: 561-868-6401
CA 00008571

CITY OF STUART, FLORIDA, INCORPORATED 1914, THE HEART OF THE TREASURE COAST

CITY OF STUART
WRF HEADWORKS REHABILITATION - PHASE 1
ELECTRICAL
SCHEDULES

VERIFY SCALES
BAR IS ONE INCH ON ORIGINAL DRAWING
0 1"
IF NOT ONE INCH ON THIS SHEET, ADJUST SCALES ACCORDINGLY

JOB NO. 201076
DRAWING NO. E04
SHEET NO. XX OF XX

LAST SAVED BY: ADS

PROJECT NO. 201076 FILE NAME: E04 - Schedules.dwg

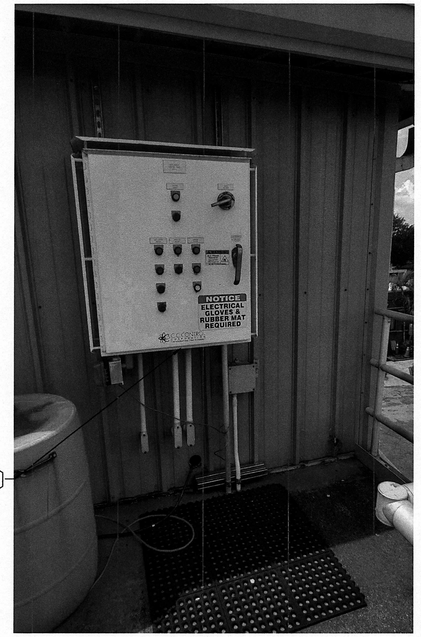

1 PHOTO - BAR SCREEN CONTROL PANEL



2 PHOTO - BAR SCREEN CONTROL CONDUITS



3 PHOTO - BAR SCREEN CONTROL CONDUITS

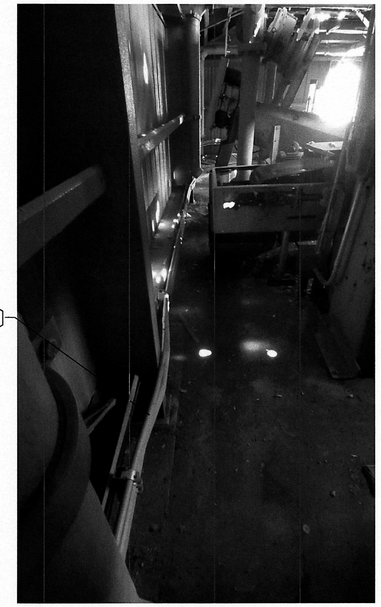

4 PHOTO - BAR SCREEN CONTROL CONDUITS

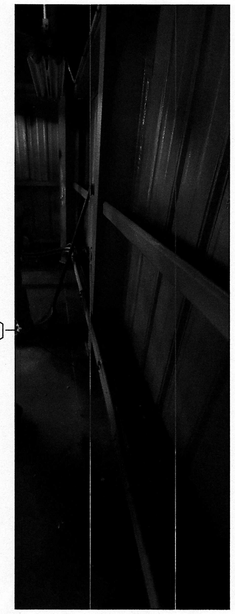

5 PHOTO - BAR SCREEN CONTROL CONDUITS



6 PHOTO - BAR SCREEN CONTROL CONDUITS

ELECTRICAL DEMOLISHION NOTES

1. CONTRACTOR SHALL DISCONNECT AND REMOVE ALL EXISTING CONDUITS AND WIRES ASSOCIATED WITH EXISTING LIGHTING AND RECEPTACLES WITHIN EXISTING ENCLOSED STRUCTURE.
2. CONTRACTOR SHALL PRESERVE AND PROTECT ALL EXISTING CONDUITS ASSOCIATED WITH BAR SCREEN CONTROL AND OTHER PROCESS EQUIPMENT ON THE STRUCTURE DURING STRUCTURE DEMOLITION.

KEY NOTES

1. PRIOR TO ENCLOSED STRUCTURE DEMOLITION CONTRACTOR SHALL DE-ATTACH EXISTING BAR SCREEN CONTROL PANEL FROM STRUCTURE AND TEMPORARILY PROTECT AND SUPPORT AS NECESSARY TO COMPLETE ENCLOSED STRUCTURE DEMOLITION. CONTRACTOR SHALL PROVIDE NEW PERMANENT PANEL SUPPORT AFTER STRUCTURE DEMOLITION.
2. CONTRACTOR SHALL PRESERVE AND PROTECT EXISTING CONDUITS ASSOCIATED WITH BAR SCREEN CONTROL DURING ENCLOSED STRUCTURE DEMOLITION. CONTRACTOR SHALL PROVIDE NEW CONDUIT SUPPORTS AS REQUIRED AFTER THE NEW CANOPY STRUCTURE AND NEW HANDRAILS ARE INSTALLED.

REV	DATE	BY	DESCRIPTION
			FINAL DESIGN SUBMITTAL

DESIGNED ADS
DRAWN MDG
CHECKED ADS
DATE FEBRUARY 2023

ALEKSANDAR D. STOJANOVIC LICENSE No. 60269 STATE OF FLORIDA PROFESSIONAL ENGINEER
05/20/24

ADS Engineering
4701 N FEDERAL HWY, STE 390
POMPANO BEACH, FL 33064
PHONE (561) 210-5715

carollo
2056 VISTA PARKWAY, SUITE 400
WEST PALM BEACH, FL 33411
PHONE: 561-868-6403 FAX: 561-868-6401
CA 00008571

CITY OF STUART · FLORIDA · INCORPORATED 1914 · HEART OF THE TREASURE COAST

CITY OF STUART
WRF HEADWORKS REHABILITATION - PHASE 1
ELECTRICAL
DEMOLITION DETAILS

VERIFY SCALES
BAR IS ONE INCH ON ORIGINAL DRAWING
0 1"
IF NOT ONE INCH ON THIS SHEET, ADJUST SCALES ACCORDINGLY

JOB NO. 201076
DRAWING NO. E05
SHEET NO. XX OF XX

LAST SAVED BY: ADS
PROJECT NO. 20´076
FILE NAME: E05 - Demo Plan.dwg

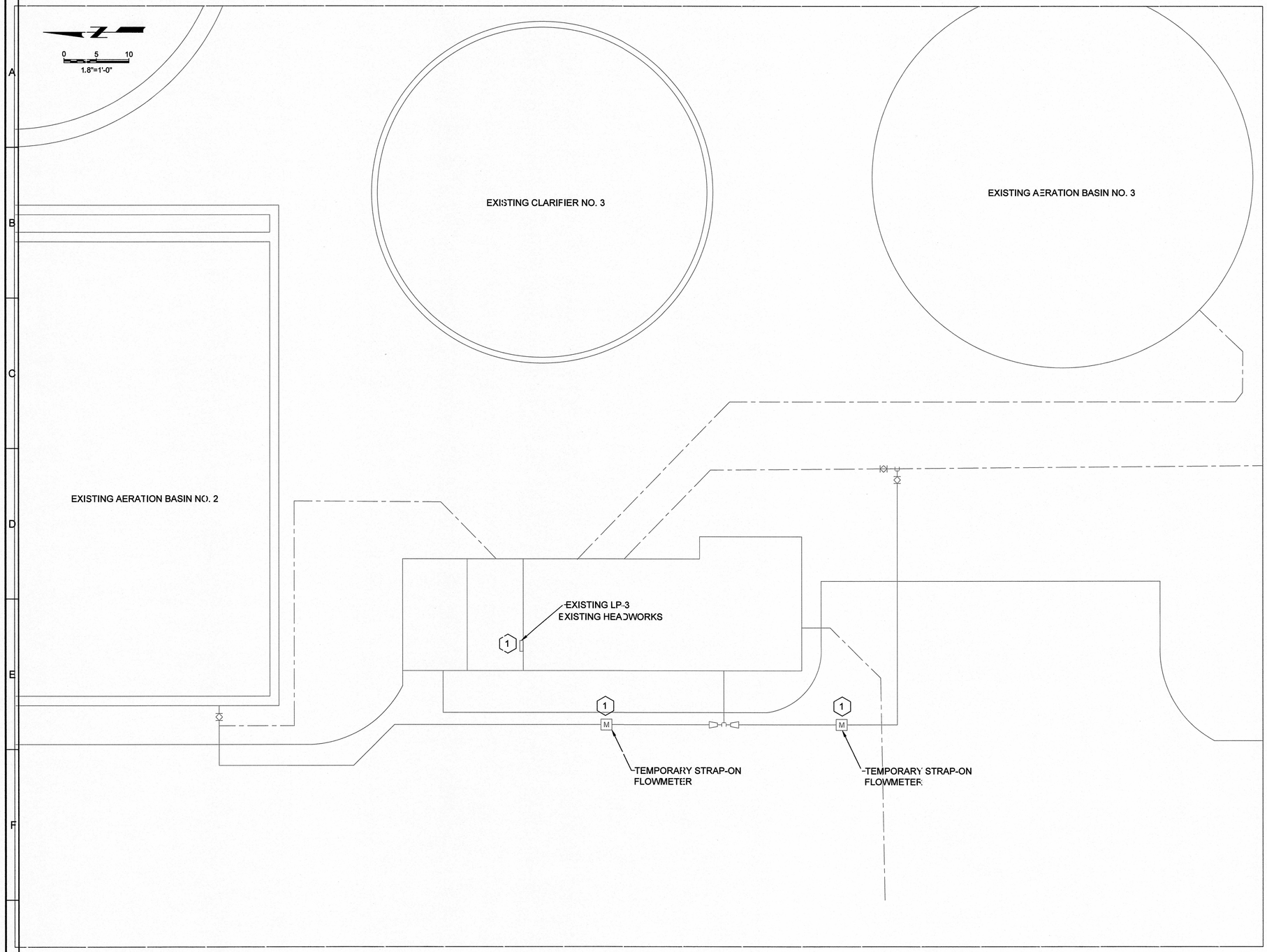

KEY NOTES

1. CONTRACTOR SHALL PROVIDE AND INSTALL TEMPORARY POWER CONNECTION FOR THE TEMPORARY STRAP-ON FLOWMETERS. PROVIDE AND INSTALL [3/4"C, 2#12,1#12G] FROM EXITING LP-3 IN ELECTRICAL ROOM TO EACH FLOWMETER. CONDUIT RUN SHALL BE ROUTED ABOVE GROUND ALONG THE TEMPORARY PIPELINE. ALL INSTALLATIONS SHALL BE PER NEC. REFER TO LP-3 SCHEDULE FOR CIRCUIT BREAKER UTILIZATION.

REV	DATE	BY	DESCRIPTION

FINAL DESIGN SUBMITTAL

DESIGNED ADS
DRAWN MDG
CHECKED ADS
DATE FEBRUARY 2023

ALEKSANDAR D. STOJANOVIC LICENSE No. 60269 STATE OF FLORIDA PROFESSIONAL ENGINEER 05/28/24

ADS Engineering
4701 N FEDERAL HWY STE 390
POMPANO BEACH, FL 33064
PHONE (561) 210-5715

carollo
2056 VISTA PARKWAY, SUITE 400
WEST PALM BEACH, FL 33411
PHONE: 561-868-6403 FAX: 561-868-6401
CA 00008571

CITY OF STUART

WRF HEADWORKS REHABILITATION - PHASE 1

ELECTRICAL

HEADWORKS BYPASS YARD PIPING PLAN

VERIFY SCALES
BAR IS ONE INCH ON ORIGINAL DRAWING
0 1"
IF NOT ONE INCH ON THIS SHEET, ADJUST SCALES ACCORDINGLY

JOB NO. 201076
DRAWING NO. E06
SHEET NO. XX OF XX

LAST SAVED BY: ADS

PROJECT NO. 20 076 FILE NAME: E06 - Headworks Plan dwg

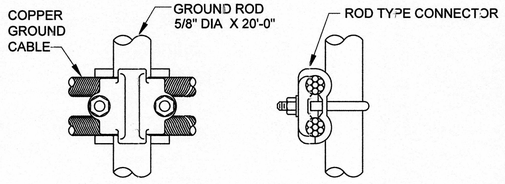

CABLE TO ROD CONNECTION

SCALE: NTS

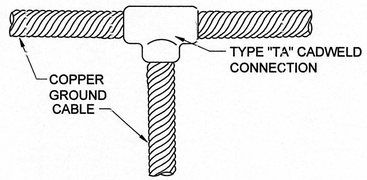

GROUND CABLE CONNECTION

SCALE: NTS

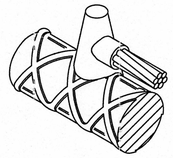

COPPER CONDUCTOR TAP TO HORIZONTAL REINFORCING BAR (REBAR) LOCATED NEAR THE BOTTOM OR VERTICALLY, WITHIN THAT PORTION OF CONCRETE FOUNDATION OR FOOTING. MAXIMUM CONDUCTOR SIZE IS 4/0 AWG. MINIMUM DIAMETER OF REBAR IS 1/2". MINIMUM LENGTH OF REBAR IS 20'.

GROUND CABLE CADWELDED TO REBAR

SCALE: NTS

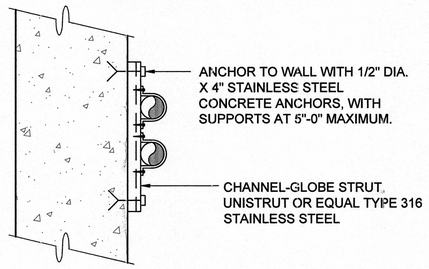

CONDUIT SUPPORT

SCALE: NTS

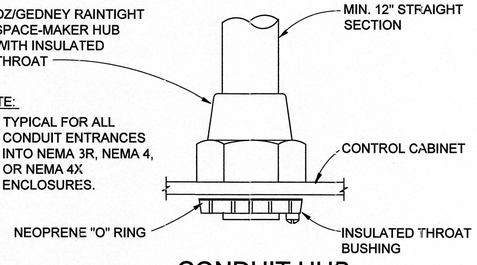

NOTE:
1. TYPICAL FOR ALL CONDUIT ENTRANCES INTO NEMA 3R, NEMA 4, OR NEMA 4X ENCLOSURES.

CONDUIT HUB

SCALE: NTS

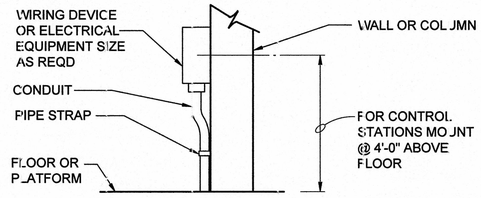

NOTE:
1. ALL MOUNTING HARDWARE SHALL BE STAINLESS STEEL 316. ON CONCRETE WALLS, USE MALLEABLE IRON INSERTS, MOUNT ENCLOSURE ON 1/4" SPACERS OF 1/2" RIGID CONDUIT.

WALL OR COLUMN MOUNTED DEVICE

SCALE: NTS

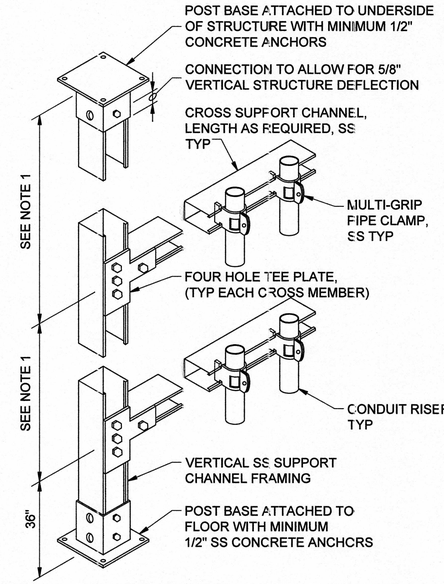

NOTES:
1. LENGTH AS REQUIRED TO LIMIT UNSUPPORTED CONDUIT LENGTH TO MAXIMUM VALUES ALLOWED BY NEC.
2. ALL MATERIALS AND FASTENING HARDWARE SHALL BE TYPE 316 STAINLESS STEEL (SS).

VERTICAL CONDUIT SUPPORT

SCALE: NTS

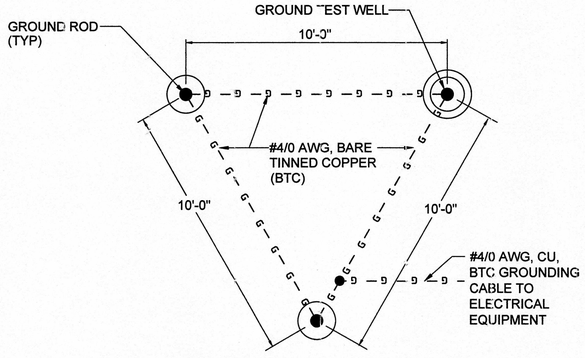

GROUND TRIANGLE

SCALE: NTS

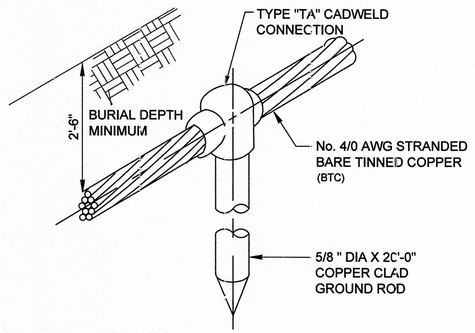

GROUND ROD

SCALE: NTS

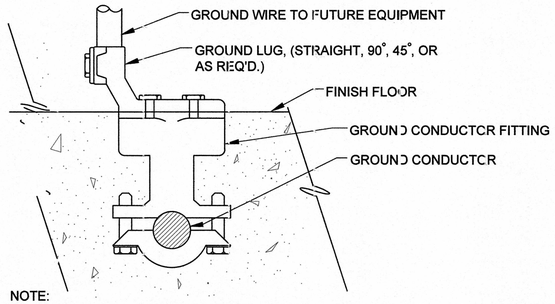

NOTE:
1. BOLTS SHALL BE INSERTED IN BOLT HOLES BEFORE CONNECTOR IS EMBEDDED.

GROUNDING INSERT

SCALE: NTS

REV	DATE	BY	DESCRIPTION
			FINAL DESIGN SUBMITTAL

DESIGNED ADS
DRAWN MDG
CHECKED ADS
DATE FEBRUARY 2023

ALEKSANDAR D. STOJANOVIC LICENSE No. 60269 STATE OF FLORIDA PROFESSIONAL ENGINEER 03/28/24

ADS Engineering
4701 N FEDERAL HWY STE 390
POMPANO BEACH, FL 33064
PHONE (561) 210-5715

carollo
2056 VISTA PARKWAY, SUITE 400
WEST PALM BEACH, FL 33411
PHONE: 561-868-6403 FAX: 561-868-6401
CA 00008571

CITY OF STUART

WRF HEADWORKS REHABILITATION - PHASE 1

ELECTRICAL

DETAILS SHEET NO.1

VERIFY SCALES
BAR IS ONE INCH ON ORIGINAL DRAWING
0 1"
IF NOT ONE INCH ON THIS SHEET, ADJUST SCALES ACCORDINGLY

JOB NO. 201076
DRAWING NO. E:07
SHEET NO. XX OF XX

LAST SAVED BY: ADS

PROJECT NO. 201076 FILE NAME: E07 - Details No.1.dwg

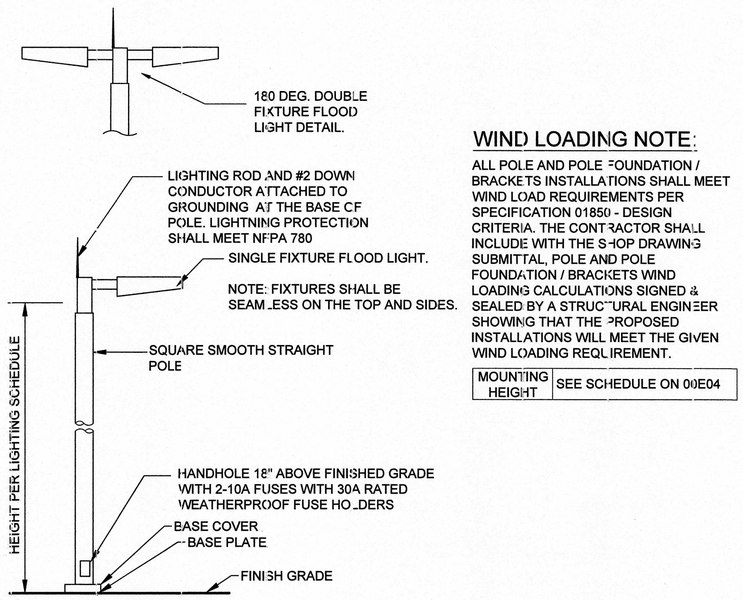

PLATFORM MOUNTED LIGHT POLE DETAIL

WIND LOADING NOTE:

ALL POLE AND POLE FOUNDATION / BRACKETS INSTALLATIONS SHALL MEET WIND LOAD REQUIREMENTS PER SPECIFICATION 01850 - DESIGN CRITERIA. THE CONTRACTOR SHALL INCLUDE WITH THE SHOP DRAWING SUBMITTAL, POLE AND POLE FOUNDATION / BRACKETS WIND LOADING CALCULATIONS SIGNED & SEALED BY A STRUCTURAL ENGINEER SHOWING THAT THE PROPOSED INSTALLATIONS WILL MEET THE GIVEN WIND LOADING REQUIREMENT.

MOUNTING HEIGHT	SEE SCHEDULE ON 00E04

LIGHT POLE DETAILS

SCALE: NTS

REV	DATE	BY	DESCRIPTION
			FINAL DESIGN SUBMITTAL

DESIGNED ADS
DRAWN MDG
CHECKED ADS
DATE FEBRUARY 2023

ALEKSANDAR D. STOJANOVIC LICENSE No. 60269 STATE OF FLORIDA PROFESSIONAL ENGINEER
03/28/24

ADS Engineering
4701 N FEDERAL HWY STE 390
POMPANO BEACH, FL 33064
PHONE (561) 210-5715

carollo
2056 VISTA PARKWAY, SUITE 400
WEST PALM BEACH, FL 33411
PHONE: 561-868-6403 FAX: 561-868-6401
CA 00008571

CITY OF STUART
WRF HEADWORKS REHABILITATION - PHASE 1
ELECTRICAL
DETAILS SHEET NO.2

VERIFY SCALES
BAR IS ONE INCH ON ORIGINAL DRAWING
0 1"
IF NOT ONE INCH ON THIS SHEET, ADJUST SCALES ACCORDINGLY

JOB NO. 201076
DRAWING NO. E08
SHEET NO. XX OF XX

LAST SAVED BY: ADS
PROJECT NO. 20076
FILE NAME: E08 - Details No.2.dwg

NOTES:

1. PROVIDE GUARDRAILS AT STAIRS AND AT OPEN SIDED WALKING SURFACES THAT ARE ELEVATED MORE THAN 30" ABOVE GRADE OR ADJACENT CONSTRUCTION.
2. WHERE EQUIPMENT IS LOCATED LESS THAN 10' FROM EDGE OF ROOF AND ELEVATED MORE THAN 30" ABOVE GRADE OR ADJACENT CONSTRUCTION, PROVIDE 42" HIGH GUARDRAIL FORMING A PROTECTIVE BARRIER. PARAPET WALL 42" OR MORE IN HEIGHT MAY BE THE GUARDRAIL AT ROOF LOCATIONS.
3. SEE DRAWINGS AND SPECIFICATIONS FOR GUARDRAIL MATERIAL TYPE(S).
4. PROVIDE HANDRAIL AT BOTH SIDES OF EVERY STAIR HAVING 2 OR MORE RISERS.
5. PROVIDE CONTINUOUS HANDRAIL GRIPPING SURFACES FOR THE FULL LENGTH OF THE STAIR.
6. PROVIDE HANDRAIL EXTENSIONS AT BOTH SIDES OF STAIRS AT TOP AND BOTTOM. HANDRAIL EXTENSION ON STAIR MOUNTED GUARDRAIL MAY BE OMITTED WHERE IT IS PERPENDICULAR TO AND IMPEDES EXIT FLOW.
7. MAKE INSIDE HANDRAIL ON SWITCHBACK STAIRS CONTINUOUS.
8. FOR WALL MOUNTED HANDRAILS, PROVIDE SINGLE RAIL WITH TOP OF RAIL AT 2'-10" HEIGHT ABOVE LANDINGS OR TREAD NOSINGS. PROVIDE MATCHING HANDRAIL ON OPPOSITE SIDE.
9. GUARDRAIL SHALL BE FIXED UNLESS OTHERWISE INDICATED ON THE DRAWINGS.
10. PLACE CENTER OF EMBEDDED POSTS 6" FROM EDGE OF CONCRETE AND 6" FROM FRONT EDGE OF CONCRETE STAIR NOSINGS UNLESS OTHERWISE INDICATED ON THE DRAWINGS.
11. PLACE GUARDRAIL POSTS OPPOSITE EACH OTHER WHERE RAILINGS ARE PARALLEL.
12. FOR GUARDRAIL POSTS MOUNTED TO BEAM OR STAIR CHANNEL, PROVIDE MANUFACTURERS REINFORCED CONNECTION FROM POST TO PLATE. PLATE AND REINFORCED INSERTS SHALL BE ALUMINUM OR STAINLESS STEEL.
13. PROVIDE SLIDING JOINTS AT 24' MAX SPACING FOR EXPANSION OF RAIL AND KICKPLATE. LOCATE SLIDING JOINTS NEAR FACE OF POST. GAP AT TIME OF INSTALLATION SHALL BE BASED ON TEMPERATURE OF GUARDRAIL. PROVIDE 1/4" GAP AT 100°F AND 5/8" GAP AT 0°F. INTERPOLATE GAP FOR OTHER INSTALLATION TEMPERATURES. AT CONCRETE EXPANSION JOINTS, PROVIDE MINIMUM 1" GAP IN SLIDING JOINTS BUT NOT LESS THAN WIDTH OF CONCRETE EXPANSION JOINT. MAKE INSERT SLEEVES IN RAILS LONG ENOUGH TO ALLOW FOR THE FULL RANGE OF MOVEMENT.
14. MATERIAL FOR KICKPLATE CHANNEL SLIDING JOINT PLATES, SHALL BE OF THE SAME MATERIAL AS THE GUARDRAIL.
15. JOINTS FOR STAINLESS STEEL GUARDRAIL AND HANDRAIL SHALL BE COPED, WELDED, AND GROUND SMOOTH.
16. PROVIDE KICKPLATE AT ALL LOCATIONS EXCEPT AT SLOPING GUARDRAIL ON STAIRS AND WHERE GUARDRAIL IS MOUNTED ON A 4" MIN CURB. KICKPLATE MAY BE EXTRUDED OR BENT PLATE AND SHALL BE ATTACHED WITH SST BOLTS IN 5/16" x 3/4" SLOTTED HOLES. BOLT KICKPLATE TO POST WITH BOTTOM 1/4" CLEAR ABOVE FLOOR. FOR SIDE MOUNTED GUARDRAIL, PROVIDE STANDARD SPACER BLOCK BETWEEN POST AND KICKPLATE TO MAINTAIN 1/4" MAX CLEAR SPACING. HAND TIGHTEN AND CENTER PUNCH BOLT THREADS TO LOCK.
17. COAT SURFACES OF ALUMINUM IN CONTACT WITH CONCRETE AS SPECIFIED. PROVIDE NEOPRENE GASKET BETWEEN ALUMINUM AND STEEL.

AC500 TYP — GUARDRAIL - HANDRAIL - NOTES

NS 06/21/19

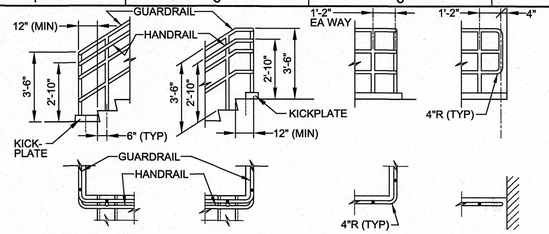

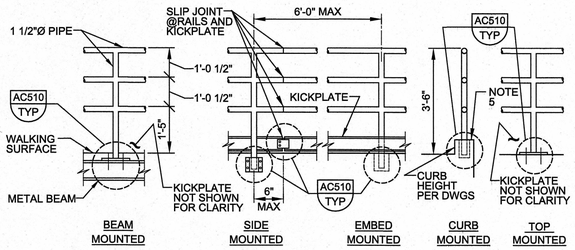

GUARDRAIL ELEVATION

AC504 TYP — GUARDRAIL - THREE RAIL

NS SHEET 1 OF 3 06/21/19

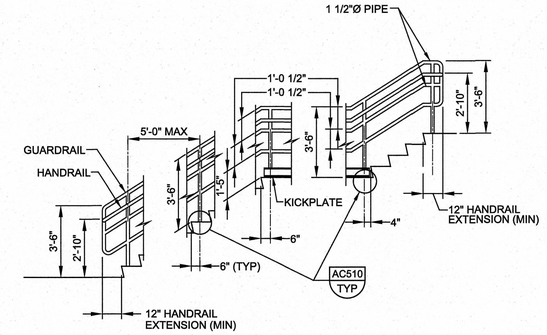

STAIR GUARDRAIL/HANDRAIL ELEVATION

NOTES:

1. THIS DETAIL IS APPLICABLE AT PRIVATE STAIRS IN F, H, AND S OCCUPANCIES WHERE OPERATOR ONLY ACCESS IS REQUIRED. DETAILS AND INSTALLATION SHALL COMPLY WITH THE BUILDING CODE.
2. SEE SPECIFICATIONS AND DETAIL AC500/TYP FOR ADDITIONAL REQUIREMENTS.
3. VARIOUS POST MOUNTING DETAILS ARE ILLUSTRATED. SEE DRAWINGS AND DETAIL AC510/TYP FOR SPECIFIC MOUNTING REQUIREMENTS.
4. HANDRAIL EXTENSIONS ARE REQUIRED ON BOTH SIDES OF STAIR, EXCEPT WHERE INSIDE HANDRAIL IS CONTINUOUS AT SWITCHBACK STAIR.
5. AT CURB, USE EMBEDDED OR TOP MOUNTED POST AS INDICATED ON THE DRAWINGS.

AC504 TYP — GUARDRAIL - THREE RAIL

NS SHEET 2 OF 3 06/21/19

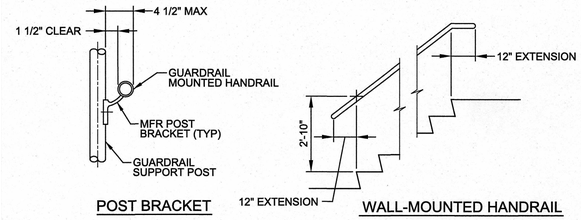

HANDRAIL DETAILS

AC504 TYP — GUARDRAIL - THREE RAIL

NS SHEET 3 OF 3 06/21/19

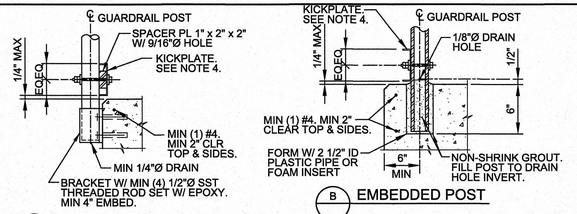

AC510 TYP — GUARDRAIL - MOUNTING

NS SHEET 1 OF 2 06/21/19

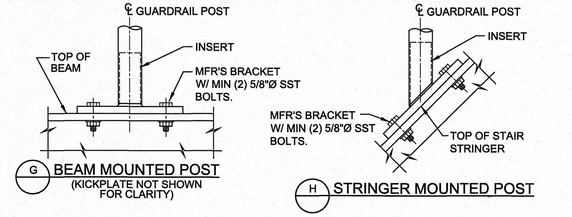

NOTES:

1. FOR ADDITIONAL REQUIREMENTS, SEE DETAIL AC500/TYP.
2. SEE DRAWINGS FOR MATERIAL TYPES.
3. COAT ALUMINUM SURFACES IN CONTACT WITH CONCRETE OR DISSIMILAR METALS AS SPECIFIED.
4. KICKPLATE CONNECTION AT POST: MIN 3/4" HORIZONTAL SLOTTED HOLE IN CHANNEL W/ MIN 1/4"Ø BOLT. PROVIDE WASHER AND DOUBLE NUTS. INSIDE NUT FINGER-TIGHT TO PERMIT EXPANSION AND CONTRACTION.

AC510 TYP — GUARDRAIL - MOUNTING

NS SHEET 2 OF 2 06/21/19

REV	DATE	BY	DESCRIPTION

DESIGNED CE
DRAWN CE
CHECKED CE
DATE FEBRUARY 2023

RICHARD C. WARNER LICENSE No 79572 STATE OF FLORIDA PROFESSIONAL ENGINEER

THIS ITEM HAS BEEN DIGITALLY SIGNED AND SEALED BY RICHARD C. WARNER ON THE DATE ADJACENT TO THE SEAL.

PRINTED COPIES OF THIS DOCUMENT ARE NOT CONSIDERED SIGNED AND SEALED AND THE SIGNATURE MUST BE VERIFIED ON ANY ELECTRONIC COPIES.

RICHARD C. WARNER LICENSE No. 79572 STATE OF FLORIDA PROFESSIONAL ENGINEER 1/17/2024

carollo
2056 VISTA PARKWAY, SUITE 400
WEST PALM BEACH, FL 33411
PHONE: 561-868-6403 FAX: 561-868-6401
CA 00008571

CITY OF STUART

WRF HEADWORKS REHABILITATION - PHASE 1

TYPICALS

TYPICAL DETAILS ARCHITECTURAL 1

VERIFY SCALES
BAR IS ONE INCH ON ORIGINAL DRAWING
0 1"
IF NOT ONE INCH ON THIS SHEET, ADJUST SCALES ACCORDINGLY

JOB NO. 201076
DRAWING NO. TA01
SHEET NO. 28 OF 29

PROJECT NO. 201076-100000 FILE NAME: 20107600TA01.dgn

LAST SAVED BY: TDietz Model: Layout1 ColorTable: gshade.ctb DesignScript: Carollo_Std_Pen_v0905.pen PlotScale: 1:1 User: svcPW Plot Date: 24-FEB-2023 9:48:27 AM

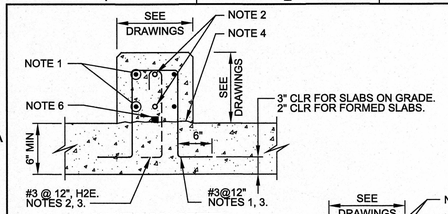

ON NEW CONCRETE

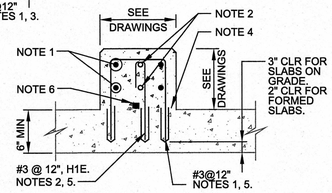

ON EXISTING CONCRETE

NOTES:

1. FOR CURB WIDTH > 10": HORIZ REINF: 1 - #4 EACH FACE FOR EACH 12" HEIGHT.
2. FOR CURB WIDTH ≤ 10". HORIZ REINF: 1 - #4 INSIDE 180° HOOK.
   ADD 1 - #4 HORIZ FOR EACH 12" HEIGHT.
3. HOOK PARALLEL TO CURB WHERE REQD.
4. REMOVE EXISTING COATINGS. ROUGHEN CONCRETE TO 1/4" AMPLITUDE. CLEAN AND APPLY EPOXY RESIN/PORTLAND CEMENT BONDING AGENT BEFORE PLACING CURB.
5. SET NEW REINF IN EXISTING CONCRETE USING DETAIL S194/TYP.
6. FOR CURB 10" & WIDER: WHERE DRAWINGS INDICATE "W/STRIP WSTP," PROVIDE LOW EXPANSION HYDROPHILIC WATERSTOP AT TOP SURFACE OF JOINT AND CENTERED BETWEEN VERTICAL #3'S. WRAP STRIP WATERSTOP UP VERTICAL END WHERE CURB ABUTS WALL OR COLUMN. STOP STRIP MIN 4" BELOW TOP OF CURB.

S184 TYP S — CONCRETE CURB

04/26/17

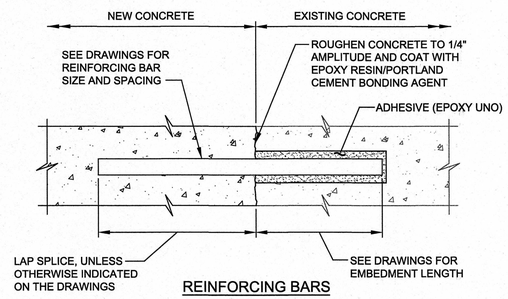

REINFORCING BARS

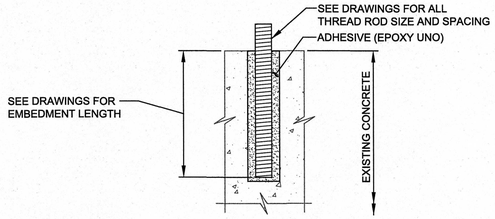

ALL-THREAD RODS

NOTE:

1. INSTALLATION OF REINFORCING BARS AND ALL THREAD RODS AS INDICATED IN THE SPECIFICATIONS.

S194 TYP S — ADHESIVE BONDED REINFORCING BARS OR ALL THREAD RODS

04/18/17

REV	DATE	BY	DESCRIPTION

DESIGNED CE
DRAWN CE
CHECKED CE
DATE FEBRUARY 2023

RICHARD C. WARNER LICENSE No 79572 STATE OF FLORIDA PROFESSIONAL ENGINEER

THIS ITEM HAS BEEN DIGITALLY SIGNED AND SEALED BY RICHARD C. WARNER ON THE DATE ADJACENT TO THE SEAL.

PRINTED COPIES OF THIS DOCUMENT ARE NOT CONSIDERED SIGNED AND SEALED AND THE SIGNATURE MUST BE VERIFIED ON ANY ELECTRONIC COPIES.

RICHARD C. WARNER LICENSE No. 79572 STATE OF FLORIDA PROFESSIONAL ENGINEER
1/12/2024

carollo®
2056 VISTA PARKWAY, SUITE 400
WEST PALM BEACH, FL 33411
PHONE: 561-868-6403 FAX: 561-868-6401
CA 00008571

CITY OF STUART · FLORIDA · INCORPORATED 1914 · SAILFISH CAPITAL OF THE WORLD

CITY OF STUART
WRF HEADWORKS REHABILITATION - PHASE 1
TYPICALS
TYPICAL DETAILS
STRUCTURAL 1

VERIFY SCALES
BAR IS ONE INCH ON ORIGINAL DRAWING
0 1"
IF NOT ONE INCH ON THIS SHEET, ADJUST SCALES ACCORDINGLY

JOB NO. 201076
DRAWING NO. TS01
SHEET NO. 29 OF 29

PROJECT NO. 201076-100000 FILE NAME: 20107600TS01.dgn
Page 546 of 610

Plot Date: 24-FEB-2023 9:48:33 AM
User: svcPW
Model: Layout1 ColorTable: gshade.ctb DesignScript: Carollo_Std_Pen_v0905.pen PlotScale: 1:1
LAST SAVED BY: TDietz

CERTIFICATE OF LIABILITY INSURANCE

DATE (MM/DD/YYYY): 7/9/2024

THIS CERTIFICATE IS ISSUED AS A MATTER OF INFORMATION ONLY AND CONFERS NO RIGHTS UPON THE CERTIFICATE HOLDER. THIS CERTIFICATE DOES NOT AFFIRMATIVELY OR NEGATIVELY AMEND, EXTEND OR ALTER THE COVERAGE AFFORDED BY THE POLICIES BELOW. THIS CERTIFICATE OF INSURANCE DOES NOT CONSTITUTE A CONTRACT BETWEEN THE ISSUING INSURER(S), AUTHORIZED REPRESENTATIVE OR PRODUCER, AND THE CERTIFICATE HOLDER.

IMPORTANT: If the certificate holder is an ADDITIONAL INSURED, the policy(ies) must have ADDITIONAL INSURED provisions or be endorsed. If SUBROGATION IS WAIVED, subject to the terms and conditions of the policy, certain policies may require an endorsement. A statement on this certificate does not confer rights to the certificate holder in lieu of such endorsement(s).

PRODUCER Stahl & Associates Insurance Inc. 3939 Tampa Road Oldsmar FL 34677	**CONTACT NAME:** Denise D'Abato **PHONE (A/C, No, Ext):** 813-818-5300 **FAX (A/C, No):** 813-818-5396 **E-MAIL ADDRESS:** DDAbato@higginbotham.net
INSURED 37990 Razorback LLC 177 Anclote Road Tarpon Springs FL 34689	**INSURER(S) AFFORDING COVERAGE** — **NAIC #** INSURER A : Auto-Owners Insurance Company — 18988 INSURER B : Landmark American Insurance Company — 33138 INSURER C : Shield Indemnity Incorporated — 16762 INSURER D : Palms Specialty Insurance Company, Inc. — 17327 INSURER E : Federal Insurance Company — 20281 INSURER F :

COVERAGES **CERTIFICATE NUMBER:** 200430763 **REVISION NUMBER:**

THIS IS TO CERTIFY THAT THE POLICIES OF INSURANCE LISTED BELOW HAVE BEEN ISSUED TO THE INSURED NAMED ABOVE FOR THE POLICY PERIOD INDICATED. NOTWITHSTANDING ANY REQUIREMENT, TERM OR CONDITION OF ANY CONTRACT OR OTHER DOCUMENT WITH RESPECT TO WHICH THIS CERTIFICATE MAY BE ISSUED OR MAY PERTAIN, THE INSURANCE AFFORDED BY THE POLICIES DESCRIBED HEREIN IS SUBJECT TO ALL THE TERMS, EXCLUSIONS AND CONDITIONS OF SUCH POLICIES. LIMITS SHOWN MAY HAVE BEEN REDUCED BY PAID CLAIMS.

INSR LTR	TYPE OF INSURANCE	ADDL INSD	SUBR WVD	POLICY NUMBER	POLICY EFF (MM/DD/YYYY)	POLICY EXP (MM/DD/YYYY)	LIMITS	
B	X **COMMERCIAL GENERAL LIABILITY** CLAIMS-MADE [X] OCCUR GEN'L AGGREGATE LIMIT APPLIES PER: POLICY [X] PRO-JECT [ ] LOC OTHER:	Y	Y	LHA114714	7/8/2024	7/8/2025	EACH OCCURRENCE DAMAGE TO RENTED PREMISES (Ea occurrence) MED EXP (Any one person) PERSONAL & ADV INJURY GENERAL AGGREGATE PRODUCTS - COMP/OP AGG $	$ 1,000,000 $ 50,000 $ 5,000 $ 1,000,000 $ 2,000,000 $ 2,000,000 $
A	**AUTOMOBILE LIABILITY** X ANY AUTO OWNED AUTOS ONLY HIRED AUTOS ONLY SCHEDULED AUTOS NON-OWNED AUTOS ONLY	Y	Y	5181816000	6/16/2024	6/16/2025	COMBINED SINGLE LIMIT (Ea accident) BODILY INJURY (Per person) BODILY INJURY (Per accident) PROPERTY DAMAGE (Per accident) $	$ 1,000,000 $ $ $ $
C	[ ] **UMBRELLA LIAB** [X] OCCUR X **EXCESS LIAB** [ ] CLAIMS-MADE DED RETENTION $	Y	Y	02-EXS-500196-01	7/8/2024	7/8/2025	EACH OCCURRENCE AGGREGATE $	$ 3,000,000 $ 3,000,000 $
	WORKERS COMPENSATION AND EMPLOYERS' LIABILITY Y / N ANY PROPRIETOR/PARTNER/EXECUTIVE OFFICER/MEMBER EXCLUDED? [ ] **(Mandatory in NH)** If yes, describe under DESCRIPTION OF OPERATIONS below	N / A					[ ] PER STATUTE [ ] OTH-ER E.L. EACH ACCIDENT E.L. DISEASE - EA EMPLOYEE E.L. DISEASE - POLICY LIMIT	 $ $ $
D E	Environmental Liability Inland Marine	Y	Y	PACS03-00148 45471971	7/8/2024 10/1/2023	7/8/2025 10/1/2024	Occurrence/Aggregate leased/rented	$1m/$2m $200,000

DESCRIPTION OF OPERATIONS / LOCATIONS / VEHICLES (ACORD 101, Additional Remarks Schedule, may be attached if more space is required)

Excess liability provides coverage over general liability and auto liability.
2024-106, City of Stuart WRF Headworks Rehab-Phase
City of Stuart is included as additional insured with respect to the general liability, auto liability, umbrella liability, and pollution policies, as required by written contract. Waiver of subrogation applies in favor of City of Stuart with respect to general liability, auto liability, umbrella liability, and pollution policies, as required by written contract.

CERTIFICATE HOLDER

City of Stuart
121 SW Flagler Avenue
Stuart FL 34994

CANCELLATION

SHOULD ANY OF THE ABOVE DESCRIBED POLICIES BE CANCELLED BEFORE THE EXPIRATION DATE THEREOF, NOTICE WILL BE DELIVERED IN ACCORDANCE WITH THE POLICY PROVISIONS.

AUTHORIZED REPRESENTATIVE



© 1988-2015 ACORD CORPORATION. All rights reserved.

58504 (1-15)

THIS ENDORSEMENT CHANGES THE POLICY. PLEASE READ IT CAREFULLY.

DESIGNATED INSURED FOR COVERED AUTOS LIABILITY COVERAGE - BLANKET COVERAGE

This endorsement modifies insurance provided under the following:

COMMERCIAL AUTO POLICY

SECTION II - COVERED AUTOS LIABILITY COVERAGE is amended. The following provision is added. Any person or organization is an **insured** for Covered Autos Liability Coverage, but only to the extent that person or organization qualifies as an **insured** under **SECTION II - COVERED AUTOS LIABILITY COVERAGE, A. COVERAGE, 1. Who Is An Insured**.

All other policy terms and conditions apply.

 Includes copyrighted material of Insurance Services Office, Inc., with its permission.

58583 (1-15)

THIS ENDORSEMENT CHANGES THE POLICY. PLEASE READ IT CAREFULLY.

WAIVER OF OUR RIGHT TO RECOVER PAYMENTS (WAIVER OF SUBROGATION) - BLANKET

This endorsement modifies insurance provided under the following:

COMMERCIAL AUTO POLICY

SECTION V CONDITIONS, A. LOSS CONDITIONS is amended. **5. Our Right to Recover Payments** is deleted and replaced by the following condition.

5. Our Right to Recover Payments

If **we** make a payment under this policy and the person to or for whom payment is made has a right to recover damages from another, **we** will be entitled to that right. That person shall do everything necessary to transfer that right to **us** and do nothing to prejudice it.

However, **we** waive **our** right to recover payments made for **bodily injury** or **property damage**:

a. Covered by the policy; and

b. Arising out of the operation of **autos** covered by the policy, in accordance with the terms and conditions of a written contract between **you** and such person or entity

only if such rights have been waived by the written contract prior to the **accident** or **loss** which caused the **bodily injury** or **property damage**.

All other policy terms and conditions apply.

 Includes copyrighted material of Insurance Services Office, Inc., with its permission.

THIS ENDORSEMENT CHANGES THE POLICY. PLEASE READ IT CAREFULLY.

ADDITIONAL INSURED – OWNERS, LESSEES OR CONTRACTORS – SCHEDULED PERSON OR ORGANIZATION

This endorsement modifies insurance provided under the following:

COMMERCIAL GENERAL LIABILITY COVERAGE PART

SCHEDULE

Name Of Additional Insured Person(s) Or Organization(s)	Location(s) Of Covered Operations
ANY PERSON(S) OR ORGANIZATION(S) REQUIRED BY WRITTEN CONTRACT OR AGREEMENT AND AS PER PARAGRAPHS A., B., AND C. BELOW	ALL LOCATIONS AT WHICH YOU ARE PERFORMING WORK FOR THE ADDITIONAL INSURED
Information required to complete this Schedule, if not shown above, will be shown in the Declarations.	

A. **Section II – Who Is An Insured** is amended to include as an additional insured the person(s) or organization(s) shown in the Schedule, but only with respect to liability for "bodily injury", "property damage" or "personal and advertising injury" caused, in whole or in part, by:

1. Your acts or omissions; or
2. The acts or omissions of those acting on your behalf;

in the performance of your ongoing operations for the additional insured(s) at the location(s) designated above.

However:

1. The insurance afforded to such additional insured only applies to the extent permitted by law; and
2. If coverage provided to the additional insured is required by a contract or agreement, the insurance afforded to such additional insured will not be broader than that which you are required by the contract or agreement to provide for such additional insured.

B. With respect to the insurance afforded to these additional insureds, the following additional exclusions apply:

This insurance does not apply to "bodily injury" or "property damage" occurr ing after:

1. All work, including materials, parts or equipment furnished in connection with such work, on the project (other than service, maintenance or repairs) to be performed by or on behalf of the additional insured(s) at the location of the covered operations has been completed; or

© Insurance Services Office, Inc., 2018

2. That portion of "your work" out of which the injury or damage arises has been put to its intended use by any person or organization other than another contractor or subcontractor engaged in performing operations for a principal as a part of the same project.

C. With respect to the insurance afforded to these additional insureds, the following is added to **Section III – Limits Of Insurance:**

If coverage provided to the additional insured is required by a contract or agreement, the most we will pay on behalf of the additional insured is the amount of insurance:

1. Required by the contract or agreement; or
2. Available under the applicable limits of insurance;

whichever is less.

This endorsement shall not increase the applicable limits of insurance.

© Insurance Services Office, Inc., 2018

THIS ENDORSEMENT CHANGES THE POLICY. PLEASE READ IT CAREFULLY.

ADDITIONAL INSURED – OWNERS, LESSEES OR CONTRACTORS – COMPLETED OPERATIONS

This endorsement modifies insurance provided under the following:

COMMERCIAL GENERAL LIABILITY COVERAGE PART
PRODUCTS/COMPLETED OPERATIONS LIABILITY COVERAGE PART

SCHEDULE

Name Of Additional Insured Person(s) Or Organization(s)	Location And Description Of Completed Operations
ANY PERSON(S) OR ORGANIZATION(S) REQUIRED BY WRITTEN CONTRACT OR AGREEMENT AND AS PER PARAGRAPHS A. AND B. BELOW	ALL LOCATIONS AT WHICH YOU ARE PERFORMING WORK FOR THE ADDITIONAL INSURED
Information required to complete this Schedule, if not shown above, will be shown in the Declarations.	

A. **Section II – Who Is An Insured** is amended to include as an additional insured the person(s) or organization(s) shown in the Schedule, but only with respect to liability for "bodily injury" or "property damage" caused, in whole or in part, by "your work" at the location designated and described in the Schedule of this endorsement performed for that additional insured and included in the "products-completed operations hazard".

However:

1. The insurance afforded to such additional insured only applies to the extent permitted by law; and
2. If coverage provided to the additional insured is required by a contract or agreement, the insurance afforded to such additional insured will not be broader than that which you are required by the contract or agreement to provide for such additional insured.

B. With respect to the insurance afforded to these additional insureds, the following is added to **Section III – Limits Of Insurance:**

If coverage provided to the additional insured is required by a contract or agreement, the most we will pay on behalf of the additional insured is the amount of insurance:

1. Required by the contract or agreement; or
2. Available under the applicable limits of insurance;

whichever is less.

This endorsement shall not increase the applicable limits of insurance.

© Insurance Services Office, Inc., 2018

THIS ENDORSEMENT CHANGES THE POLICY. PLEASE READ IT CAREFULLY.

WAIVER OF TRANSFER OF RIGHTS OF RECOVERY AGAINST OTHERS TO US (WAIVER OF SUBROGATION)

This endorsement modifies insurance provided under the following:

COMMERCIAL GENERAL LIABILITY COVERAGE PART
ELECTRONIC DATA LIABILITY COVERAGE PART
LIQUOR LIABILITY COVERAGE PART
POLLUTION LIABILITY COVERAGE PART DESIGNATED SITES
POLLUTION LIABILITY LIMITED COVERAGE PART DESIGNATED SITES
PRODUCTS/COMPLETED OPERATIONS LIABILITY COVERAGE PART
RAILROAD PROTECTIVE LIABILITY COVERAGE PART
UNDERGROUND STORAGE TANK POLICY DESIGNATED TANKS

SCHEDULE

Name Of Person(s) Or Organization(s):
Information required to complete this Schedule, if not shown above, will be shown in the Declarations.

The following is added to Paragraph **8. Transfer Of Rights Of Recovery Against Others To Us** of **Section IV – Conditions:**

We waive any right of recovery against the person(s) or organization(s) shown in the Schedule above because of payments we make under this Coverage Part. Such waiver by us applies only to the extent that the insured has waived its right of recovery against such person(s) or organization(s) prior to loss. This endorsement applies only to the person(s) or organization(s) shown in the Schedule above.

© Insurance Services Office, Inc., 2018

CERTIFICATE OF LIABILITY INSURANCE

DATE (MM/DD/YYYY): 7/9/2024

THIS CERTIFICATE IS ISSUED AS A MATTER OF INFORMATION ONLY AND CONFERS NO RIGHTS UPON THE CERTIFICATE HOLDER. THIS CERTIFICATE DOES NOT AFFIRMATIVELY OR NEGATIVELY AMEND, EXTEND OR ALTER THE COVERAGE AFFORDED BY THE POLICIES BELOW. THIS CERTIFICATE OF INSURANCE DOES NOT CONSTITUTE A CONTRACT BETWEEN THE ISSUING INSURER(S), AUTHORIZED REPRESENTATIVE OR PRODUCER, AND THE CERTIFICATE HOLDER.

IMPORTANT: If the certificate holder is an ADDITIONAL INSURED, the policy(ies) must have ADDITIONAL INSURED provisions or be endorsed. If SUBROGATION IS WAIVED, subject to the terms and conditions of the policy, certain policies may require an endorsement. A statement on this certificate does not confer rights to the certificate holder in lieu of such endorsement(s).

PRODUCER SUNZ Insurance Solutions, LLC. ID: (TLR) c/o TLR of Bonita, Inc 700 Central Ave, Suite 500 St. Petersburg, FL 33701	**CONTACT NAME:** Workers' Comp Department **PHONE (A/C, No, Ext):** 727-520-7676 x 3 **FAX (A/C, No):** 727-525-3862 **E-MAIL ADDRESS:** certs@encorehr.com
INSURED TLR of Bonita, Inc 700 Central Avenue Suite 500 St. Petersburg FL 33701	**INSURER(S) AFFORDING COVERAGE** — **NAIC #** INSURER A : SUNZ Insurance Company — 34762 INSURER B : INSURER C : INSURER D : INSURER E : INSURER F :

COVERAGES **CERTIFICATE NUMBER:** 80872650 **REVISION NUMBER:**

THIS IS TO CERTIFY THAT THE POLICIES OF INSURANCE LISTED BELOW HAVE BEEN ISSUED TO THE INSURED NAMED ABOVE FOR THE POLICY PERIOD INDICATED. NOTWITHSTANDING ANY REQUIREMENT, TERM OR CONDITION OF ANY CONTRACT OR OTHER DOCUMENT WITH RESPECT TO WHICH THIS CERTIFICATE MAY BE ISSUED OR MAY PERTAIN, THE INSURANCE AFFORDED BY THE POLICIES DESCRIBED HEREIN IS SUBJECT TO ALL THE TERMS, EXCLUSIONS AND CONDITIONS OF SUCH POLICIES. LIMITS SHOWN MAY HAVE BEEN REDUCED BY PAID CLAIMS.

INSR LTR	TYPE OF INSURANCE	ADDL INSD	SUBR WVD	POLICY NUMBER	POLICY EFF (MM/DD/YYYY)	POLICY EXP (MM/DD/YYYY)	LIMITS	
	COMMERCIAL GENERAL LIABILITY						EACH OCCURRENCE	$
	☐ CLAIMS-MADE ☐ OCCUR						DAMAGE TO RENTED PREMISES (Ea occurrence)	$
							MED EXP (Any one person)	$
							PERSONAL & ADV INJURY	$
	GEN'L AGGREGATE LIMIT APPLIES PER:						GENERAL AGGREGATE	$
	☐ POLICY ☐ PRO-JECT ☐ LOC						PRODUCTS - COMP/OP AGG	$
	OTHER:							$
	AUTOMOBILE LIABILITY						COMBINED SINGLE LIMIT (Ea accident)	$
	ANY AUTO						BODILY INJURY (Per person)	$
	OWNED AUTOS ONLY ☐ SCHEDULED AUTOS						BODILY INJURY (Per accident)	$
	HIRED AUTOS ONLY ☐ NON-OWNED AUTOS ONLY						PROPERTY DAMAGE (Per accident)	$
								$
	UMBRELLA LIAB ☐ OCCUR						EACH OCCURRENCE	$
	EXCESS LIAB ☐ CLAIMS-MADE						AGGREGATE	$
	DED ☐ RETENTION $							$
A	**WORKERS COMPENSATION AND EMPLOYERS' LIABILITY** Y / N	N / A	✓	WC039-00001-024	6/1/2024	6/1/2025	✓ PER STATUTE ☐ OTH-ER	
	ANYPROPRIETOR/PARTNER/EXECUTIVE OFFICER/MEMBER EXCLUDED? N **(Mandatory in NH)**						E.L. EACH ACCIDENT	$ 1,000,000
	If yes, describe under DESCRIPTION OF OPERATIONS below						E.L. DISEASE - EA EMPLOYEE	$ 1,000,000
							E.L. DISEASE - POLICY LIMIT	$ 1,000,000

DESCRIPTION OF OPERATIONS / LOCATIONS / VEHICLES (ACORD 101, Additional Remarks Schedule, may be attached if more space is required)

Coverage Provided for all leased employees but not subcontractors of: Razorback LLC Client Effective: 09/28/2020
Waiver of Subrogation in favor of certificate holder, as per written contract, while work is performed at or in:
Florida - 2024-106, City of Stuart WRF Headworks Rehab-Phase

CERTIFICATE HOLDER

441

City of Stuart
121 SW Flagler Avenue
Stuart FL 34994

CANCELLATION

SHOULD ANY OF THE ABOVE DESCRIBED POLICIES BE CANCELLED BEFORE THE EXPIRATION DATE THEREOF, NOTICE WILL BE DELIVERED IN ACCORDANCE WITH THE POLICY PROVISIONS.

AUTHORIZED REPRESENTATIVE

Rick Leonard

© 1988-2015 ACORD CORPORATION. All rights reserved.

WAIVER OF OUR RIGHT TO RECOVER FROM OTHERS ENDORSEMENT

We have the right to recover our payments from anyone liable for an injury covered by this policy. We will not enforce our right against the person or organization named in the Schedule. (This agreement applies only to the extent that you perform work under a written contract that requires you to obtain this agreement from us.)

This agreement shall not operate directly or indirectly to benefit anyone not named in the Schedule.

Schedule

In Favor of: City of Stuart

121 SW Flagler Avenue
Stuart FL 34994

Client/Project:

Coverage Provided for all leased employees but not subcontractors of: Razorback LLC Client Effective: 09/28/2020 Waiver of Subrogation in favor of certificate holder, as per written contract, while work is performed at or in: Florida - 2024-106, City of Stuart WRF Headworks Rehab-Phase

This endorsement changes the policy to which it is attached and is effective on the date issued unless otherwise stated.

(The information below is required only when this endorsement is issued subsequent to preparation of the policy.)

Endorsement Effective: 06/01/2024

Policy No.: WC039-00001-024

Endorsement No.:80872650
Premium:

Insured: TLR of Bonita, Inc

Insurance Company:
SUNZ Insurance Company

Countersigned by _____

Date Issued: 07/09/2024

WC 00 03 13
(Ed. 4-84)

1983 National Council on Compensation Insurance.

30 Day Cancellation Notice

The certificate confirms current coverage as allowed by the policy(ies) indicated. The cancellation provisions for all states are attached to the policy(ies) where the whole of the rule is indicated. It would be incorrect to enter any number of days for termination on the certificate because different states have different rules related to days' notice required for termination. Accord used to include the "10 day" terminology on the certificate because that was the time most states allowed for non-payment of premium, but that may vary between states and not apply to the policy. The policy is the only place where termination rules related to the time periods are to be found. The cert holder is not guaranteed any notice by the insurance carrier related to the termination on a Master policy. The PEO does this.

CITY OF STUART, FLORIDA
AGENDA ITEM REQUEST
City Commission

Meeting Date: 7/22/2024 **Prepared by:** Jacqui May

Title of Item:
AUTHORIZATION TO APPLY FOR FLORIDA DEP TRAIL-GO PROGRAM GRANT (RC):

RESOLUTION No. 68-2024: A RESOLUTION OF THE CITY COMMISSION OF THE CITY OF STUART, FLORIDA, AUTHORIZING THE CITY OF STUART TO SUBMIT AN APPLICATION FOR A FLORIDA DEPARTMENT OF ENVIRONMENTAL PROTECTION TRAIL-GO PROGRAM GRANT FOR THE MAINTENANCE AND OPERATION OF CITY TRAILS; AND AUTHORIZING EXECUTION OF A GRANT AGREEMENT IF AWARDED; AND FURTHER AUTHORIZING ANY MINOR AMENDMENTS TO THE GRANT AGREEMENT TO FACILITATE THE PROGRAM AS APPROPRIATE; PROVIDING AN EFFECTIVE DATE, AND FOR OTHER PURPOSES.

Summary Explanation/Background Information on Agenda Request:
The Florida Department of Environmental Protection's TRAIL-GO Program provides grant funds to recipients for the purposes provided for herein, which will benefit the City of Stuart by providing for the maintenance and operation of city trails. The City of Stuart's Public Works Department's strategy relating to public access to the city's trails will align with the missions of DEP's Program. A completed "Grant Consideration Worksheet" demonstrates this is a viable reimbursement grant. The City continues to implement strategies to improve safe access to our community for all visitors and residents through projects as needed.

Funding Source:
N/A

Recommended Action:
Authorize Resolution 68-2024

ATTACHMENTS:
1. R68-2024 Florida DEP Trail-Go Program Grant App.
2. R68-2024 Att.1_Grant Consideration Worksheet_DEP_TRAIL-GO_ 2024

BEFORE THE CITY COMMISSION
CITY OF STUART, FLORIDA

RESOLUTION NUMBER 68-2024

A RESOLUTION OF THE CITY COMMISSION OF THE CITY OF STUART, FLORIDA, AUTHORIZING THE CITY OF STUART TO SUBMIT AN APPLICATION FOR A FLORIDA DEPARTMENT OF ENVIRONMENTAL PROTECTION TRAIL-GO PROGRAM GRANT FOR THE MAINTENANCE AND OPERATION OF CITY TRAILS; AND AUTHORIZING EXECUTION OF A GRANT AGREEMENT IF AWARDED; AND FURTHER AUTHORIZING ANY MINOR AMENDMENTS TO THE GRANT AGREEMENT TO FACILITATE THE PROGRAM AS APPROPRIATE; PROVIDING AN EFFECTIVE DATE, AND FOR OTHER PURPOSES.

* * * * *

WHEREAS The Florida Department of Environmental Protection's TRAIL-GO Program provides grant funds to Recipients for the purposes provided for herein which will benefit the City of Stuart by providing for the maintenance and operation of city trails; and

WHEREAS The City of Stuart's Public Works Department's strategy relating to public access to the city's trails will align with the missions of DEP's Program; and

WHEREAS A completed "Grant Consideration Worksheet" demonstrates this is a viable reimbursement grant.

WHEREAS The City continues to implement strategies to improve safe access to our community for all visitors and residents through projects as needed.

NOW THEREFORE, BE IT RESOLVED BY THE CITY COMMISSION OF THE CITY OF STUART, FLORIDA, AS FOLLOWS:

SECTION 1: The precatory language above is hereby adopted as if set forth below.

SECTION 2: The City Manager is authorized to submit a grant application for the Stuart Public Works Department to the Florida Department of Environmental Protection TRAIL-GO Program; and to execute an agreement, if the grant is awarded; and to make minor amendments to any such agreement; subject to review and approval by the City Attorney.

SECTION 3: This resolution shall take effect immediately upon adoption.

Commissioner _____ offered the foregoing resolution and moved its adoption. The motion was seconded by Commissioner _____ and upon being put to a roll call vote, the vote was as follows:

	YES	NO	ABSENT	ABSTAIN
REBECCA S. BRUNER, MAYOR				
CAMPBELL RICH, VICE MAYOR				
EULA R. CLARKE, COMMISSIONER				
CHRISTOPHER COLLINS, COMMISSIONER				
TROY MCDONALD, COMMISSIONER				

ADOPTED this ___ day of _____, 2024.

ATTEST:

_____
MARY R. KINDEL, MMC
CITY CLERK

_____
REBECCA S. BRUNER
MAYOR

APPROVED AS TO FORM
AND CORRECTNESS:

_____
LEE J. BAGGETT, ESQ
CITY ATTORNEY

City of Stuart Internal Grant Application Decision Worksheet

Date: 7/11/2024 **Assessment Prepared by: J.May**

Funding Agency: Florida Department of Environmental Protection
Grant Name: TRAIL-GO 2024
Eligibility Requirements: municipality
Purpose of Grant: Maintain and Operate existing trails
Criteria: Must have trails within specific radius of existing East Coast Greenway System. J. May has verified with DEP existing Haney Trail, Poppleton Creek Trailhead, and Frazier Creek are eligibl

Grant Application Decision Framework

Viability Scoring - 0 = lowest - 3 = highest

Criteria	Score	Notes
Will they fund a non 501 C3	3	Yes
Are we in correct geographic area	3	Yes
Do we address funder's interests	3	Yes
Do our needs align with their purpose	3	Yes
Do we serve their target population/goals	3	Yes
Do they offer support we can actually use	3	Yes
Credibility		
Do we have any connection/credibility	3	Yes
Do we have the subject expert expertise	3	Yes
Do we have staff available to execute	3	Yes
Timing		
Does award date align with project timeline	3	Yes
Can we meet the application deadline	3	Yes
Can we meet reporting requirements	3	Yes
Can we develop project plan and budget in time	3	Yes
Are reporting/eval requirements reasonable	3	Yes
Associated Costs		
Do they require a match	2	**Recommended***
Will we have to hire consultants to prepare or execute	2	Possibly
Will additional staff costs be incurred to execute	3	No
Score	**49**	

Viability Scoring Results:

0-15 = Low Viability - Consider not applying
16-35 Medium Viability - Effort might not be worth reward
36-51 High Viability - Get going on the application!

Internal Notes:

*Matching funds are not required, however, any cost-share we can contribute will increase our score/priority.
GrantPortal opens August 1 - Priority given to early submissions.

Year one of program - award announcement Oct. 2024/Expend by June 30, 2025

CITY OF STUART, FLORIDA
AGENDA ITEM REQUEST
City Commission

Meeting Date: 7/22/2024 **Prepared by:** Jacqui May

Title of Item:
LETTER OF SUPPORT FOR MARTIN ARTS GRANT APPLICATION (RC):

RESOLUTION No. 70-2024; A RESOLUTION OF THE CITY COMMISSION OF THE CITY OF STUART, FLORIDA, AUTHORIZING A LETTER OF SUPPORT TO MARTIN ARTS TO ACCOMPANY THEIR NATIONAL ENDOWMENT FOR THE ARTS OUR TOWN PROGRAM GRANT APPLICATION; PROVIDING AN EFFECTIVE DATE, AND FOR OTHER PURPOSES.

Summary Explanation/Background Information on Agenda Request:
The National Endowment for the Arts (NEA) is offering the Our Town Grant Program to support activities and projects that integrate arts, culture, and design into local efforts to strengthen communities over the long term. The NEA Our Town Grant Program offers opportunities to advance local economic, physical, and social outcomes and to develop meaningful and substantive engagement in our community. The local nonprofit organization, Martin Arts, is seeking a letter of support to accompany their NEA Our Town Grant Program application. The City Commission believes that it is in the best interest of the City to support Martin Arts' effort to enhance the quality of life in our community by applying for NEA funding.

Funding Source:
N/A

Recommended Action:
Authorize Resolution 70-2024

ATTACHMENTS:
1. R70-2024 Martin Arts NEA 2024 Our Town Grant Support_Rev
2. R70-2024 Draft Letter of Support from Mayor Bruner

BEFORE THE CITY COMMISSION
CITY OF STUART, FLORIDA

RESOLUTION NUMBER 70-2024

A RESOLUTION OF THE CITY COMMISSION OF THE CITY OF STUART, FLORIDA, AUTHORIZING A LETTER OF SUPPORT TO MARTIN ARTS TO ACCOMPANY THEIR NATIONAL ENDOWMENT FOR THE ARTS OUR TOWN PROGRAM GRANT APPLICATION; PROVIDING AN EFFECTIVE DATE, AND FOR OTHER PURPOSES.

* * * * *

WHEREAS, the National Endowment for the Arts (NEA) is offering the Our Town Grant Program to support activities and projects that integrate arts, culture, and design into local efforts to strengthen communities over the long term; and

WHEREAS, the Our Town Grant Program offers opportunities to advance local economic, physical, and social outcomes and to develop meaningful and substantive engagement in our community; and

WHEREAS, the local nonprofit organization, Martin Arts, is seeking a letter of support to accompany their NEA Our Town Grant Program application; and

WHEREAS, the City Commission believes that it is in the best interest of the City to support Martin Arts' effort to enhance the quality of life in our community by applying for NEA funding.

NOW THEREFORE, BE IT RESOLVED BY THE CITY COMMISSION OF THE CITY OF STUART, FLORIDA, AS FOLLOWS:

SECTION 1: The City Commission of the City of Stuart, Florida, hereby authorizes the Mayor to sign on behalf of the City of Stuart, a letter of support to Martin Arts for its submission of an application for the NEA Our Town Grant.

SECTION 2: Upon the Mayor's endorsement and execution by the City Clerk, the letter of support shall be transmitted to Martin Arts for its submission with its application package to the National Endowment for the Arts.

SECTION 3: This resolution shall take effect immediately upon adoption.

Commissioner _____ offered the foregoing resolution and moved its adoption. The motion was seconded by Commissioner _____ and upon being put to a roll call vote, the vote was as follows:

	YES	NO	ABSENT	ABSTAIN
REBECCA S. BRUNER, MAYOR				
CAMPBELL RICH, VICE MAYOR				
EULA R. CLARKE, COMMISSIONER				
CHRISTOPHER COLLINS, COMMISSIONER				
TROY MCDONALD, COMMISSIONER				

ADOPTED this ___ day of _____, 2024.

ATTEST:

_____
MARY R. KINDEL, MMC
CITY CLERK

_____
REBECCA S. BRUNER
MAYOR

APPROVED AS TO FORM
AND CORRECTNESS:

_____
LEE J. BAGGETT, ESQ
CITY ATTORNEY

City of Stuart

Rebecca S. Bruner | Mayor
121 SW Flagler Ave. Stuart Fl. 34994
Phone: 772.288.5312

July 16, 2024

Nancy K. Turrell, Executive Director
Martin Arts
80 SE Ocean Blvd,
Stuart, FL 34994

Subject: Letter of Support for NEA Our Town Grant Application

Dear Nancy,

I am writing on behalf of the City Commission of Stuart, Florida, to express our enthusiastic support for MartinArts' application to the National Endowment for the Arts (NEA) Our Town Grant Program. This program plays a crucial role in fostering community development through arts, culture, and design initiatives, aligning perfectly with our shared goals for enhancing the quality of life in the Treasure Coast of Florida.

The City of Stuart recognizes the profound impact that arts and cultural projects have on our local community. They not only enrich our cultural fabric but also contribute significantly to our economic and social vitality. MartinArts has been a cornerstone in advancing these values, consistently demonstrating a commitment to promoting creativity and engagement among our residents.

Therefore, it is with great pleasure that the City Commission authorizes the Mayor to endorse and transmit this letter of support to accompany MartinArts' NEA Our Town Grant application. We firmly believe that MartinArts' proposed project aligns with our community's vision for sustainable growth and inclusive development. The City of Stuart will be engaged with the planning and design process along the way. MartinArts's vision for this transformative project revives a historic building, enhances arts accessibility, and amplifies economic impact. The facility will be renovated to serve as a dynamic "home campus" for arts organizations and individuals, facilitating rehearsals, performances, creations, teachings, and exhibitions.

We commend MartinArts for its dedication and initiative in pursuing this opportunity to further enrich our community. We are confident that their proposal will contribute positively to our city's continued progress and prosperity. This initiative underscores creative placemaking, integrating arts and culture to enrich our community.

Thank you for considering our support of MartinArts' application. We look forward to the opportunity to collaborate on this and future endeavors that benefit our residents and strengthen our community.

Sincerely,

Rebecca Bruner
Mayor City of Stuart, Florida

CITY OF STUART, FLORIDA
AGENDA ITEM REQUEST
City Commission

Meeting Date: 7/22/2024

Prepared by: Ben Hogarth, Pinal Gandhi-Savdas, Jim Chrulski

Title of Item:
ACCEPTING A STATE APPROPRIATION FROM THE FLORIDA DEPARTMENT OF COMMERCE FOR GUY DAVIS PARK IMPROVEMENTS (RC):

RESOLUTION No. 62-2024; A RESOLUTION OF THE CITY COMMISSION OF THE CITY OF STUART, FLORIDA ACCEPTING A STATE APPROPRIATION OF $500,000.00 FROM THE FLORIDA DEPARTMENT OF COMMERCE FOR PARK IMPROVEMENTS AT GUY DAVIS PARK; AUTHORIZING THE CITY MANAGER TO EXECUTE A GRANT AGREEMENT WITH THE FLORIDA DEPARTMENT OF COMMERCE AS A CONDITION OF AWARD; PROVIDING AN EFFECTIVE DATE; AND FOR OTHER PURPOSES.

Summary Explanation/Background Information on Agenda Request:
Guy Davis Park is nestled between the East Stuart neighborhood and Dixie Highway, adjacent to the City's 10th Street Community Center, which has served for decades as a recreational hub for athletic activities and social gatherings. The park is also located within the City of Stuart Community Redevelopment Area (CRA), which functions as an investment tool of the community, primarily supporting the vitality and quality of life within the historic downtown.

Throughout the early 2000s, municipal leaders held a series of community charrettes and town hall meetings to gather feedback from residents in order to improve Guy Davis Park so that it can better serve the entire community. By the year 2014, the City had developed and adopted a new Community Park Master Plan (Resolution 73-2014). The plan was composed of several phased elements, including new baseball fields, covered basketball courts, improved parking, multi-use building and pathways, community plaza, playground and shade sails, splash pad, and vehicular access from Dixie Highway (A1A). However, the new master plan was contingent upon funding and sat idle until planning and budgeting could account for the costs.

By 2019, the plan was further amended by former City Manager David Dyess with the intent to organize the greater project into smaller phased elements. Ultimately, the City moved forward on Phases 1 and 2 and began the solicitation process through a Request For Proposal (RFP) in October 2019 (RFP #2020-100). At the time, the plan still included a design for 3 new baseball fields, fencing, dugouts, a concession, and a restroom structure to support. In early 2020, after the city commission decided not to redevelop the Sailfish Ball Fields, city leadership also recognized a growing demand for other athletic (sports) needs beyond the historic baseball use. The plan was then further amended to remove new baseball fields and the site layout was reorganized to add a multi-use sports field to support a wider range of sports and athletics. As a result, a new RFP was issued in September 2020 (RFP #2020-200) with the new scope of work.

In January 2021, the City awarded a contract for engineering and design of Phases1 and 2 to Calvin, Giordano & Associates (CGA), Inc. The consultant issued a preliminary schematic by January 2022 following months of consultation with city officials and then proceeded to solicit community feedback as a means of procuring a final design to serve all the new demands and desires of the community at large. Engineering and design for Phases 1 and 2 are anticipated to reach 60% completion by end of Summer, 2024.

Although the Stuart CRA has tentatively budgeted funds for Phases 1 and 2 (anticipated for the 2025 Fiscal Year), the City Commission approved a $1 Million appropriations request through the Florida Legislature in its 2024 Legislative Priorities (Resolution 56-2023). With the assistance of the Martin County representatives in the Florida Legislature, the City was awarded $500,000 in the state's General Appropriations Act towards engineering, design, and construction of the Guy Davis Community Park Improvements Project. The resolution in this item will authorize the city manager to enter into a grant award agreement with the Florida Department of Commerce to expend and be reimbursed up to $500,000 towards the project.

Funding Source:
Revenue - State Grants and Aids

Recommended Action:
Motion approval of Resolution No. 62-2024.

ATTACHMENTS:
1. R62-2024 Accepting a Grant Award from FL Department of Commerce for Guy Davis Park Improvements Project
2. City of Stuart Res. 56-2023 Adoption of 2024 Legislative Priorities
3. Phase 1 and 2 Scope of Work
4. Phase 1 Schematic Design
5. Phase 2 Schematic Design
6. CRA Budget FY 2024 - Guy Davis Park

BEFORE THE CITY COMMISSION
CITY OF STUART, FLORIDA

RESOLUTION NUMBER 62-2024

A RESOLUTION OF THE CITY COMMISSION OF THE CITY OF STUART, FLORIDA ACCEPTING A STATE APPROPRIATION OF $500,000.00 FROM THE FLORIDA DEPARTMENT OF COMMERCE FOR PARK IMPROVEMENTS AT GUY DAVIS PARK; AUTHORIZING THE CITY MANAGER TO EXECUTE A GRANT AGREEMENT WITH THE FLORIDA DEPARTMENT OF COMMERCE AS A CONDITION OF AWARD; PROVIDING AN EFFECTIVE DATE; AND FOR OTHER PURPOSES.

* * * * *

WHEREAS, each year, the Florida Legislature earmarks state funds for local projects and programs that serve a community or statewide benefit; and

WHEREAS, during the 2024 Florida Legislative Session, the City of Stuart requested and was awarded an appropriation of $500,000.00 towards the Guy Davis Park Revitalization Project located within its Community Redevelopment Area (CRA); and

WHEREAS, Guy Davis Park is the central community park for the City, situated between the historic East Stuart Neighborhood and U.S. 1 commercial corridor; and

WHEREAS, the City has retained a consultant to assist in the design and engineering of park improvements at Guy Davis that would revitalize park facilities, add a multi-purpose sports

field, restrooms, children's play area, fitness trail loop, pavilions, improved parking and access, and stormwater and irrigation infrastructure enhancements; and

WHEREAS, as a condition of the appropriation, the City must enter into a grant award agreement with the Florida Department of Commerce (COM); and

WHEREAS, the City Commission of the City of Stuart authorizes the City Manager to accept and enter into a grant award agreement with COM for $500,000.00 towards Guy Davis Park Improvements.

NOW THEREFORE, BE IT RESOLVED BY THE CITY COMMISSION OF THE CITY OF STUART, FLORIDA THAT:

SECTION 1: The City Commission of the City of Stuart, Florida authorizes the City Manager to accept and enter into a grant award agreement with COM in an amount of $500,000.00 towards Guy Davis Park Improvements as identified under line 2347A of the 2024-2025 General Appropriations Act.

SECTION 2: The City Manager is further authorized to identify and budget municipal funds towards the Guy Davis Park Revitalization and Improvements Project in accordance with the provisions of the grant award agreement with the state and pursuant to all laws and regulations governing the expenditure thereof.

SECTION 3: This resolution shall take effect upon adoption.

Commissioner _____ offered the foregoing resolution and moved its adoption. The motion was seconded by Commissioner _____ and upon being put to a roll call vote, the vote was as follows:

	YES	NO	ABSENT	ABSTAIN
REBECCA S. BRUNER, MAYOR				
CAMPBELL RICH, VICE MAYOR				
EULA R. CLARKE, COMMISSIONER				
CHRISTOPHER COLLINS, COMMISSIONER				
TROY MCDONALD, COMMISSIONER				

ADOPTED this ___ day of _____, 2024.

ATTEST:

_____
MARY R. KINDEL
CITY CLERK

_____
REBECCA S. BRUNER
MAYOR

APPROVED AS TO FORM
AND CORRECTNESS:

_____
LEE J. BAGGETT, ESQ
CITY ATTORNEY

BEFORE THE CITY COMMISSION
CITY OF STUART, FLORIDA

RESOLUTION NUMBER 56-2023

A RESOLUTION OF THE CITY COMMISSION OF THE CITY OF STUART, FLORIDA, AUTHORIZING THE ADOPTION OF LEGISLATIVE PRIORITIES FOR THE 2024 LEGISLATIVE SESSION; PROVIDING FOR AN EFFECTIVE DATE; AND FOR OTHER PURPOSES.

* * * * *

WHEREAS, the City of Stuart City Commission is committed to legislative advocacy in the Capital on issues that directly and indirectly impact residents, while providing meaningful input to elected representatives on issues of concern throughout the legislative process; and

WHEREAS, the City's participation in legislative affairs and advocacy through the Florida League of Cities legislative program is fundamental in the protection of home rule powers; and

WHEREAS, city officials have identified multiple critical state aid requests including funding community improvements to Guy Davis and Memorial Parks, and homeowner assistance for septic to sewer connections; and

WHEREAS, the City has also identified critical legislative policy issues concerning water quality & sustainability, resiliency, home rule protection, investments in alternative energy & transportation, local development regulation, and solid waste management.

NOW THEREFORE BE IT RESOLVED BY THE CITY COMMISSION OF THE CITY OF STUART, FLORIDA, THAT:

SECTION 1: The foregoing precatory language is adopted as if set forth below.

SECTION 2: The City of Stuart, Florida and City Commission hereby approve and adopt Legislative Priorities for the 2024 Legislative Session and authorize the City Clerk to transmit a copy of this Resolution and attached priorities to the Martin County Legislative Delegation.

SECTION 3: This Resolution shall become effective upon its adoption.

Commissioner COLLINS offered the foregoing resolution and moved its adoption. The motion was seconded by Commissioner BRUNER and upon being put to a roll call vote, the vote was as follows:

	YES	NO	ABSENT	ABSTAIN
TROY MCDONALD, MAYOR	Y			
BECKY BRUNER, VICE MAYOR	Y			
EULA R. CLARKE, COMMISSIONER	Y			
CHRISTOPHER COLLINS, COMMISSIONER	Y			
CAMPBELL RICH, COMMISSIONER	Y			

ADOPTED this 14th day of August, 2023.

ATTEST:

MARY R. KINDEL
CITY CLERK

TROY MCDONALD
MAYOR

APPROVED AS TO FORM
AND CORRECTNESS:

PAUL J. NICOLETTI
INTERIM CITY ATTORNEY

2024 LEGISLATIVE PRIORITIES

THE FOLLOWING LEGISLATIVE MATTERS HAVE BEEN IDENTIFIED BY THE CITY OF STUART CITY COMMISSION AS THE MOST URGENT LEGISLATIVE PRIORITIES FOR THE CITY IN THE YEAR 2024.

WE THANK THE MARTIN COUNTY DELEGATION FOR THEIR CONSIDERATION.

APPROPRIATION REQUESTS:

1. SEPTIC TO SEWER CONNECTION PROGRAM ASSISTANCE – $1,000,000

Background: The City of Stuart has spent the last decade aggressively investing in the completion of its septic to sewer infrastructure and connections in order to ensure that it meets all Basin Management Action Plan targets. Water quality is a critical issue for the City because most septic tank users in Stuart have a close proximity or direct adjacency to the St. Lucie River and its tributaries, which effects regional water quality for all. Although the City completed primary infrastructure installation in 2020, more than 700 individual connections still need to be made to fully complete the septic to sewer conversion program. The City has historically offered connection incentives for property owners on a periodic basis at great expense to the city, but for many residents, the financial burden of connecting to sewer may still be too great. With state assistance, the City will be able to reduce the inflationary cost of these connections comparative to earlier years by offering a reduced cost to homeowners who are currently on septic. The total cost of all remaining connections is estimated to be more than $5 Million and the City remains committed towards its contributions and reducing connection costs for all.

The City of Stuart REQUESTS state aid in the form of a $1,000,000 non-recurring appropriations for its Septic to Sewer Connection Program as direct assistance and incentive to homeowners who may otherwise be unable or unwilling to connect due to financial hardship.

2. MEMORIAL PARK FINAL MASTER PLAN IMPROVEMENTS – $1,000,000

Background: In the last 20 years, the City of Stuart has committed nearly $10 million towards capital improvements and a revisioning of its Memorial Park including the installation of war and veteran memorials honoring the sacrifice of the community's bravest. Additions over the years of phased local capital investment include stormwater

and drainage improvements with more sustainable natural vegetation and a health (walking) trail. However, the City still lacks a central gathering space and venue with the capacity to provide for larger events for residents and visitors alike. To reconcile this deficiency, Stuart has worked with private partners in designing in Memorial Park, an event space to accommodate events of up to 5,000 people as its final phase improvements to the park. The City also has longstanding relationships with private organizations in the performing arts including the Martin Arts Council, and the historic Lyric Theater, which would serve as excellent programming partners if the City is able to achieve its vision with state assistance. The total project cost is estimated at $2 million to $3 million.

The City of Stuart REQUESTS state aid in the form of a $1,000,000 non-recurring appropriation as a state match for final phase improvements to its Memorial Park to include a community gathering space that will provide a critically needed venue for large events and tourism-related gatherings in the downtown area, which is not otherwise possible with currently limited available public space in the mostly built-out community.

3. GUY DAVIS COMMUNITY PARK REVITILIZATION - $1,000,000

Background: In 2020, the City of Stuart solicited private firms for the engineering and design of revitalization improvements to Guy Davis Park, which is the central park for city residents and the majority African American East Stuart Community. The selected firm has spent the last few years coordinating with city officials and hosting community engagement meetings, charettes, and equity-focused outreach in order to refine designed improvements to the park including access and connectivity to the rest of the city. These enhancements include a new multi-purpose field for variety recreation and play, restrooms, children's play area, fitness loop, pavilions, and stormwater and irrigation infrastructure enhancements. The total project cost is expected to exceed $5 Million and includes contributions from the Stuart Community Redevelopment Agency (CRA).

The City of Stuart REQUESTS state aid in the form of a $1,000,000 non-recurring appropriations for the Guy Davis Community Park Revitalization project, which will provide critical improvements to the City's central park within the historically and majority African American East Stuart neighborhood.

POLICY PRIORITIES:

1. WATER QUALITY & SUSTAINABILITY

Background: In order to curb the harmful impacts of freshwater discharges, state resources and funding is desperately needed for capital projects designed to retain and treat billions of gallons of freshwater, from wherever it may originate. The City of Stuart

has made great efforts to reduce its impact on the St. Lucie River by designing and constructing stormwater treatment projects, advocating for zero freshwater discharges from Lake Okeechobee, and completing the installation of sewer infrastructure in the city. However, homeowners and utility customers are not currently required to connect to sewer if they have a septic system, and many families are unable to afford the capital costs to connect. To resolve the consternation of homeowners, annual recurring funding designed to incentivize septic users to convert to municipal sewer systems should be a chief priority statewide. Further investments in sustainable infrastructure alternatives like Alternative Water Supply projects and other innovative technologies could mitigate the strain on existing supply, while alleviating concerns that growing pollution will compound future costs in providing the same levels of essential services.

The City of Stuart SUPPORTS recurring state funding for water quality and supply related projects and programs, and especially those appropriations that assist homeowners in switching from their septic system to municipal sewer service.

2. HOME RULE PROTECTION

Background: The home rule powers established in 1968 by the voters of Florida and subsequent Municipal Home Rule Powers Act (MHRPA) codified in 1973 by the Florida Legislature guaranteed the right of local communities to self-governance. For decades, municipal governments have afforded state residents with easy access and direct influence on the decisions that most impact their lives. While some issues are universal to all persons, businesses, and properties in the state, polling after polling of Florida residents has evidenced that the citizens of Florida believe their local government is the best means of addressing their unique concerns and desires. Moreover, the inability of local leaders to effectuate reform for their communities undermines faith in the democratic process. In the last five years alone, the Legislature has engaged in substantial overreach of power to the frustration of the very public forums and deliberative processes that local communities have enjoyed for decades. This political usurpation has resulted in the erosion of trust in state and local government alike, diminishing the efficacy of both in carrying out the will of the people.

The City of Stuart OPPOSES all legislation that would undermine the home rule powers established in the Florida Constitution and Chapter 166, Florida Statutes.

3. LOCAL DEVELOPMENT REGULATION

Background: During the 2023 Legislative Session, the Florida Legislature adopted Senate Bill 102 relating to Affordable Housing, which greatly expanded the opportunity for developers to bypass traditional local public hearing procedures in order to expedite approval and construction processes. While this bill may have a potential net-positive impact for thousands of Floridian renters, one particular challenge for local governments will be interpretation of each development plan for conformity with local comprehensive

plans and/or the application of SB 102 to the development. Additionally, a pair of bills filed during the 2023 Session (SB 682 / HB 671) would have reduced a local governments time to respond to a development application from 45 days to 9 calendar days. This potential impact to municipal processes (which are not all structured uniformly), added to the new requirements made possible by SB 102, would place an undue hardship and burden on local government staff who will be responsible for making determinations on complex issues in a substantially shorter timeframe.

The City of Stuart OPPOSES legislation that harms traditional local regulatory processes relating to land use & development and further urges the Florida Legislature to enshrine protections for existing local government authorities.

4. SOLID WASTE MANAGEMENT

Background: For decades, local government utilities have provided quality solid waste services for their residents while managing a fast-growing population and rising costs. During the 2023 Legislative Session, SB 975 and HB 798 were filed to prohibit municipalities and counties from prohibiting or restraining private solid waste service providers from providing solid waste service to residents within their jurisdiction. This is problematic because many municipalities in the state, and their taxpayers and utility customers, have invested in service infrastructure over decades. This investment including taxation and rate increases may have not occurred if the law were different. The Florida League of Cities estimates that local government revenues would be impacted by more than $500 Million statewide if these bills or those with similar consequences for local governments were adopted into law.

The City OPPOSES legislation that would undermine local regulatory authorities over the provision of solid waste services including the right to prohibit or restrain such service within the community's jurisdiction.

5. RESILIENCY & LAND ACQUISITION FOR CONSERVANCY

Background: Since 2017, six hurricanes of Category 4 or 5 strength have made landfall along the Gulf Coast – three of which made landfall in the State of Florida. The rising concern of catastrophic storms and their impacts to economies and environments alike have propelled a new wave of public efforts to curb their impacts. However, the growing insurance and housing affordability crisis in Florida is further straining resources and making recovery from major disasters a longer-term process. Absent any substantial policy changes, severe weather will continue to devastate economies throughout the state and communities will see longer and longer periods of recovery. The acquisition of land for public conservancy in areas most directly impacted by storm surge and intense inland flooding could mitigate damage to persons and property in future events. Legislative measures should bring a renewed focus on utilizing Land Acquisition Trust Fund (LATF) dollars for this purpose, while prioritizing the mitigation of flood-prone communities such as those around the Kissimmee Chain of Lakes and those around Lake Okeechobee.

The additional benefit of repurposing this land for flood mitigation is the potential it has to limit damaging to communities that otherwise receive high volumes of discharges.

The City of Stuart SUPPORTS establishing measurable statewide objectives towards reducing exposures and limiting sensitivities of communities in the state to storm surge and flooding. Furthermore, the City SUPPORTS the purchase and acquisition of lands for the public purpose of conservancy, and the retention and treatment of water.

6. INVESTMENTS IN ALTERNATIVE ENERGY & TRANSPORTATION

Background: Electric vehicle use in Florida (and many other states) is on the rise and having infrastructure in place that supports the exponential trend of EV adoption will help Florida keep pace with a growing industry that may become a boon for future economic growth in the state. The State of Florida Department of Transportation (FDOT) has recently adopted a plan (2022) to expand access to EV chargers along state interstate and highways through the next few years. However, local communities and specifically far-removed urban areas off highways would not potentially see such federal and statewide investment until the latter term of this new program. To match the $198 million federal dollars allocated for the program in the State, the Florida Legislature should consider providing new grant programs for communities that would like to expand access beyond highways and into their community. The State may also consider other renewable energy investments in communities that may be supportive of utilizing public buildings and spaces in creative and innovative ways or assisting businesses and homeowners in financing their own investment in solar energy.

The City of Stuart SUPPORTS legislation that provides financial assistance for the installation of publicly available electric vehicle charging infrastructure within community's urban areas that will help alleviate concerns of charging access for potential EV adopters.

Phase 01: Base Park Design

- Multi-purpose Sports Field (Sod)
- Linear Trail Network w/ Educational Flora Signage and Sports Plaques
- Multi-purpose Stage Area w/ Small and Large Event Lawns
- Flexible Central Lawn Area for Markets and Pop-Up Events; Overfill Parking Spaces
- Re-surfaced Playground w/ Aquatic Play Equip
- Concession, Restroom, & Storage Building
- Park Wayfinding & Monumental Entry Signage
- Picnic Area w/ BBQ Racks
- Shaded Pavilion Areas
- Pervious Concrete Parking Lot w/ Paver Stalls
- Fitness Trail Loop w/ Vitacourse Equipment
- Cultural meaning and expression

Phase 02: Master Plan

- Community Dog Park
- Skate Park w/ Integrated Public Art
- Linear Park w/ Parking and Streetscape Improvements
- City-wide Wayfinding for Historic Black-Owned Businesses
- Areas for Programmatic Designations such as: Domino Park, Public Plaza, Open Lawn Area, Yard Games, etc.

Scope of Work


PROPOSED IMPROVEMENTS TO ENTRY SIGNAGE
SE 10TH ST
EXISTING BUILDING TO REMAIN
PROPOSED 10TH ST. ENTRY IMPROVEMENTS
PROPOSED OPEN EVENT LAWN
EXISTING SOCCER FIELDS TO REMAIN
PROPOSED PICNIC PAVILIONS
RE-SURFACED PLAYGROUND W/ AQUATIC PLAY EQUIPMENT
EXISTING BASEBALL FIELD TO REMAIN
EXISTING FIRST TEE TO REMAIN
EXISTING CONCESSION STAND TO REMAIN
PROPOSED RESTROOM
FLEXIBLE STAGE AREA
PROPOSED PICNIC PAVILIONS
PROPOSED MULTI-PURPOSE SPORTS FIELD
PROPOSED TRAIL ALONG FIELDS' EDGE
PROPOSED FITNESS TRAIL W/ VITACOURSE EQUIPMENT
EXISTING FOOTBALL FIELD + TRACK TO REMAIN
MODIFIED PASSIVE DRAINAGE FIELDS
PROPOSED NATURE / ART / EDUCATIONAL TRAIL
SE DIXIE HWY
OPPORTUNITY FOR ART IN PUBLIC PLACES MURAL
E 13TH ST
FLEXIBLE EVENT LAWN
SE PATHFINDER AVE
SE ARAPAHO AVE
PROPOSED PERVIOUS CONCRETE PARKING LOT W/ PAVERS +/- 115 PARKING SPACES
PROPOSED PICNIC AREA
E 14TH ST
PROPOSED MONUMENTAL SIGN W/ PARK BRANDING

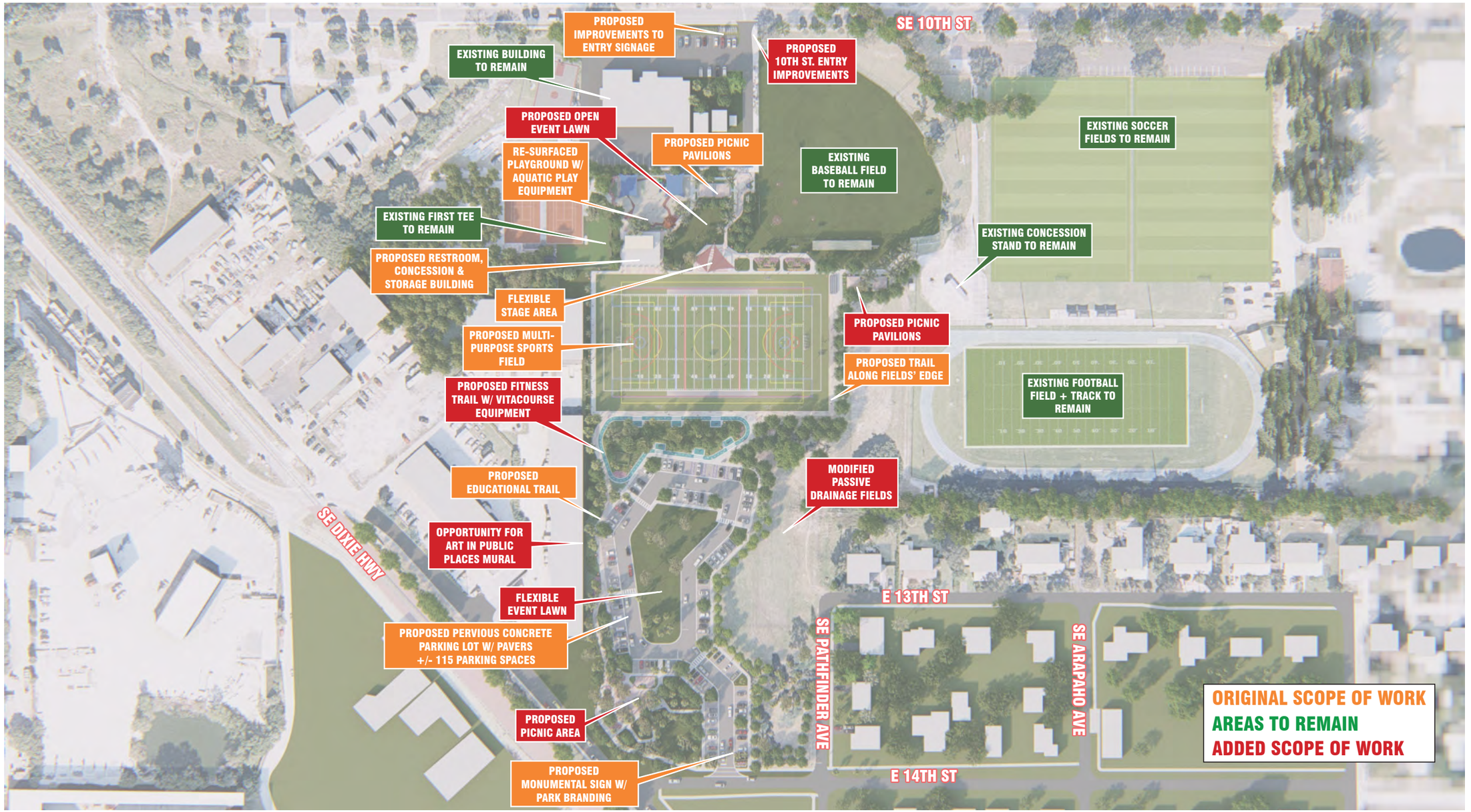

Calvin, Giordano & Associates, Inc.
A SAFEbuilt COMPANY

SCHEMATIC DESIGN GUY DAVIS COMMUNITY PARK

SCHEMATIC DESIGN PACKAGE

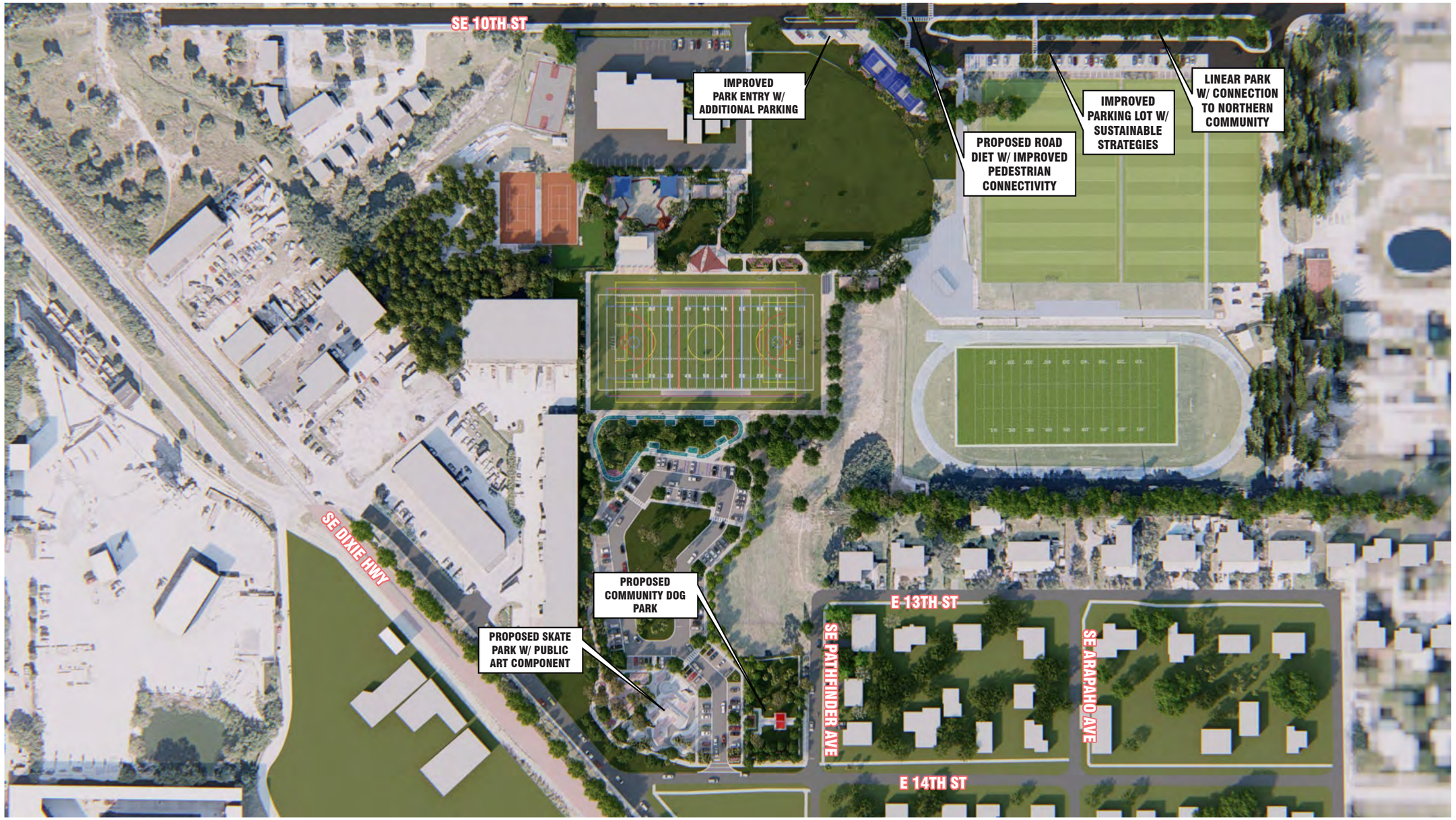

SCHEMATIC DESIGN GUY DAVIS COMMUNITY PARK

SCHEMATIC DESIGN PACKAGE

Capital Improvement Projects (CIP) Budget Summary

PROJECTS	2019	2020	2021	2022	2023	2024	2025	2026	2027	2028	Project Total
Federal Highway 21046601											
Federal HwyTree Planting Program Development				$30,000							$30,000
Federal Hwy Tree Planting Program Implementation						$150,000					$150,000
Guy Davis Community Park 21045901											
Phase I Site Plan			$344,517								$344,517
Phase II Final Design					$370,000						$370,000
Construction							$7,000,000				$7,000,000
Downtown Undergrounding											
Phase I Design - Seminole Street - 20038901		$49,991									$49,991
Phase II Design - Osceola - 22038902				$174,554							$174,554
Construction of Phase I and II - 22038903						$3,100,000					$3,100,000
Seminole Streetscape Improv 20042701											
Design		$75,000									$75,000
Construction						$1,200,000					$1,200,000
Stypmann Sidewalk Improv 21046701											
Conceptual				$60,000							$60,000
Design				$62,000							$62,000
Construction						$125,000					$125,000
Stypmann Drainage Improv 21046702											
Design					$70,900						$70,900
Construction											TBD

CITY OF STUART, FLORIDA
AGENDA ITEM REQUEST
City Commission

Meeting Date: 7/22/2024 **Prepared by:** Michael Mortell

Title of Item:
RELEASE OF UNITY OF TITLE FOR LOTS 1 AND 2 OF THE NORTON'S LANDING PLAT (RC):

RESOLUTION No. 69-2024; A RESOLUTION OF THE CITY COMMISSION OF THE CITY OF STUART, FLORIDA RELEASING A UNITY OF TITLE FOR LOTS 1 AND 2 OF THE JANUARY 1988 NORTON'S LANDING PLAT, PROVIDING AN EFFECTIVE DATE, AND FOR OTHER PURPOSES.

Summary Explanation/Background Information on Agenda Request:
Lots 1 and 2 are the subject of the current request for release of Unity of Title. However, Lots 1, 2 and 3 were originally part of the Plat of Indian Groves as recorded in Plat Book 1, Page 37, of the Public Records of Martin County, Florida. This plat was approved and recorded in the early 1920s. In or about 1987, the Plat of Norton's Landing was approved, which was a replat of Lots 13 and 24, and portions of Lots 10, 11, 12, 14 and 23, all being then part of the Plat of Indian Groves. The Plat of Norton's Landing which was adopted by the Stuart City Commission in 1987 established Lots 1, 2 and 3 as part of the new plat that replaced the Indian Groves Lots 10-14, 23 and 24. In 1989, a first *Unity of Title* was filed as part of the construction of the residences on Lots 13 and 24. and portions of Lots 10, 11, 12, 14 and 23, all being then part of the Plat of Indian Groves. It is confusing but these lots were re-platted two years prior and had become Notion's Landing. The property described in the original Unity of Title (i.e., Lots 13 and 24, and portions of Lots 10, 11, 12, 14 and 23, of the Plat of Indian Groves) is one and the same as Lots 1, 2 and 3 of Norton's Landing. A copy of this first Unity is attached to the agenda as an exhibit.

In 1991, a second Unity of Title was recorded that covered the same parcels as the first Unity of Title (Lots 1, 2 and 3). This second Unity of Title expressly provides that it "supersede(s), in all respects, that Unity of Title previously recorded" and referenced in the prior paragraph. The concern is that if the Commission were to release the Second Unity of Title, a cloud might remain on the Title because the first would still remain in the public record. A copy of the second unity of title is attached to the agenda.

In 2003, the owners of Lot 1 and 2 entered into a third Unity of Title, this one encompassing only Lots 1 and 2, which was in favor of Martin County, Florida. Unlike the first two unity of titles, this Unity of Title was in favor of Martin County, and not the City of Stuart, and required the approval of the Board of County Commissioners to be released. A request to release this Unity of Title in favor of Martin County was filed with the Martin County Board of County Commissioners on or about October 2, 2023. The Martin County Board of County Commissioners approved the release of this Unity of Title on November 21, 2023.

There is a long history related to the house that is currently under construction. Without getting into the past, the applicant is trying to resolve any and all concerns and complete the construction in a timely manner. The surrounding neighbors have been mailed a notice of the agenda item and are aware of the request as well as the staff recommendation that the Unity be released conditioned upon a second parcel being created immediately and the outside of the house being completed, including storm water and landscaping. Staff will address the drainage, storm water, landscaping and compliance with building code through the permit process. The only issue for the City Commission is the Unity of Title. Several residents in the surrounding neighborhood have expressed a desire for the City to have the project completed.

The Owner/Applicant of Lots 1 and 2 has represented to the City that if the City Commission releases the Unity of Titles, he will immediately create a separate legal-sized parcel through the Martin County Property Appraiser's Office; and It is in the best interest of the residents of Stuart for the City to release the Unity of Titles on the Property conditioned upon the Owner immediately dividing Lots 1 and 2 into two (2) separate and distinct parcels with separate parcel identification numbers. As a condition of the release, staff is requesting that it be conditioned upon the completion of the exterior of the property within the time frame set forth by the Building Official and that the second parcel be created at the property appraiser's office and receive a new parcel identification number no later than September 1, 2024. If the owners of the property fail to create two separate parcels before September 1, 2024, the Resolution would be deemed void for failure to meet a condition precedent.

All issues related to zoning, density, future land use, setbacks or other matters will be addressed in the permitting process and are not at issue. The only matter raised for consideration currently is the release of the original and second unities of title. The applicant will present the request and will be available to answer questions from the Commissioners.

Funding Source:
N/A

Recommended Action:
Approve Resolution 69-2024 with any conditions set by the Board.

ATTACHMENTS:
1. R69-2024 Unity of Title for Norton's Lane
2. Lots 1 and 2 Nortons Landing
3. Exhibit A 0880-1113
4. Exhibit B 0912-2002
5. Stancavich - Letter re Release of Unity of Title

BEFORE THE CITY COMMISSION
CITY OF STUART, FLORIDA

RESOLUTION NUMBER 69-2024

A RESOLUTION OF THE CITY COMMISSION OF THE CITY OF STUART, FLORIDA RELEASING A UNITY OF TITLE FOR LOTS 1 AND 2 OF THE JANUARY 1988 NORTON'S LANDING PLAT, PROVIDING AN EFFECTIVE DATE, AND FOR OTHER PURPOSES

* * * * *

WHEREAS, in 2015, the Applicant, Robert Stancavich filed an Application for a Variance from the Board of Adjustment; and

WHEREAS, the Parcel is located on the northernmost part of Norton's Lane and represents Lots 1 and 2 of the Norton's Landing Subdivision, with Poppleton Creek to the northeast and Village Oaks Condominiums to the west; and

WHEREAS, the Board of Adjustment Staff Report specifically stated that the Public Works Department would require details of the construction to ensure there are no issues of stormwater run-off in relation to the Property and its surroundings during the building permit stage in the process. The Applicant will be subject to a detailed plan review at the time when a site and construction permit is submitted to the Building Department for the development of the site as a single-family residence; and

WHEREAS, during the Board of Adjustment Hearing, the Applicant provided verbal testimony indicating that he would split the Lot into two (2) legally dimensioned Lots, conditioned upon the granting of the Variance request. The Board of Adjustment granted the request in 2015 but the Owner/Applicant did not file for a lot split or parcel separation; and

WHEREAS, the Applicant has now come to the City and claims that he was not aware of three (3) separate Deed Restrictions recorded as Unity of Titles on the Property. The first was recorded in 1989 and the second was recorded in 1991 and superseded and replaced the original. The third Unity of Title was recorded in favor of the County. In November, 2023, the County approved Resolution 23-11.13 releasing the 2003 Unity of Title; and

WHEREAS, the Unity of Title restricting the land appears to have included Lots 1, 2, and 3 however, Lot 3 has been developed into a single-family home and is under separate ownership; and

WHEREAS, the Applicant has been constructing a single-family home on the Property for approximately eight (8) years and now claims that a Release of the Unity of Title is necessary for him to create the separate parcel and obtain a separate parcel identification number which is necessary to obtain a building permit and certificate of occupancy; and

WHEREAS, the Owner/Applicant of Lots 1 and 2 has represented to the City that if the City Commission releases the Unity of Titles, he will immediately create a separate legal-size parcel through the Martin County Property Appraiser's Office; and

WHEREAS, it is in the best interest of the residents of Stuart for the City to release the Unity of Titles on the Property conditioned upon the Owner immediately dividing Lots 1 and 2 into two (2) separate and distinct parcels with separate parcel identification numbers. Further, the best interests of the residents of Stuart will only be served if the Owner of the partially built structure on Lot 2 completes the Property to the extent that the stormwater, outside landscaping and exterior shell of the Property are complete within a reasonable amount of time.

NOW THEREFORE, BE IT RESOLVED BY THE CITY COMMISSION OF THE CITY OF STUART, FLORIDA that:

SECTION 1: This Resolution is conditioned upon the Owner/Applicant completing the process of separating the Property into two (2) separate parcels and creating a new legal lot with its own parcel identification number prior to August 30, 2024.

SECTION 2: The Unity of Title recorded in Official Record Book 0880 Page 1113, of the Public Records of Martin County, Florida, attached hereto as Exhibit "A" is hereby released conditioned upon the creation of a separate legal parcel with a new parcel identification number assigned for Lot 2 before September 1, 2024.

SECTION 3: The Unity of Title recorded in Official Record Book 0912 Page 2002, of the Public Records of Martin County, Florida, attached hereto as Exhibit "B" is hereby released conditioned upon the creation of a second legal parcel with a new parcel identification number assigned for Lot 2 before September 1, 2024.

SECTION 4: This Resolution shall be recorded in the Public Records of Martin County.

SECTION 5: This resolution shall take effect upon adoption.

Commissioner _____offered the foregoing resolution and moved its adoption. The motion was seconded by Commissioner _____ and upon being put to a roll call vote, the vote was as follows:

	YES	NO	ABSENT	ABSTAIN
BECKY BRUNER, MAYOR				
CAMPBELL RICH, VICE MAYOR				
TROY MCDONALD, COMMISSIONER				
EULA R. CLARKE, COMMISSIONER				
CHRISTOPHER COLLINS, COMMISSIONER				

ADOPTED this ____ day of July, 2024.

ATTEST:

_____
MARY R. KINDEL, MMC
CITY CLERK

_____
REBECCA S. BRUNER
MAYOR

APPROVED AS TO FORM
AND CORRECTNESS:

_____
LEE J. BAGGETT, ESQ.
CITY ATTORNEY


7-1-1
CITY OF STUART
2
VILLAGE OAKS
CONDO
NORTON'S
LANDING
Bldg 1
Bldg 2
Bldg 3
Bldg 6
Bldg 7
Bldg 8
Bldg 9
Bldg 10
Bldg 11
Bldg 12
Pool
CH POOL
SW NORTON'S LN
SW INDIAN GROVES DR
AVE B
CLOSED
88.98
108
88.71
82.73
50 m
200 ft

RECORD VERIFIED

EXHIBIT "A"

UNITY OF TITLE

852514

In consideration of approval by the City of Stuart for the construction of a multi-family project in the City's jurisdiction known as Norton's Landing and for other good and valuable consideration, the undersigned property owner hereby agrees to restrict the use of said property described as:

See attached Exhibit "A"

in the following manner:

1. Said property shall be considered as one plot and parcel of land and no portion of said plot and parcel of land shall be sold, transferred, devised or assigned separately except in its entirety as one plot or parcel of land.

2. The undersigned further agrees that this condition, restriction and limitation shall be deemed a covenant running with the land, and shall remain in full force and effect, and be binding upon the undersigned, her heirs and assigns until such time as the same may be released in writing by the City of Stuart.

3. The undersigned further agrees that this instrument shall be recorded in the Public Records of Martin County.

Signed, sealed, executed, and acknowledged on this 22 day of August, 1989.

WITNESSES:

Patricia A Owens

Angel Kroger

Fran Norton
FRAN NORTON

STATE OF FLORIDA
COUNTY OF MARTIN

I HEREBY CERTIFY that on this 22 day of August, 1989, before me personally appeared Fran Norton, to me known to be the person described in and who executed the foregoing instrument, and she acknowledged to me the execution thereof to be her free act and deed for the uses and purposes therein mentioned.

WITNESS my signature and official seal in the County and State aforesaid, the day and year last aforesaid.

Lois M Peters
NOTARY PUBLIC

NOTARY PUBLIC, STATE OF FLORIDA.
MY COMMISSION EXPIRES: DEC. 10, 1991.
BONDED THRU NOTARY PUBLIC UNDERWRITERS

H179MS01

Copy Copy Copy

DESCRIPTION

Lots 13, 24 and a portion of Lots 10, 11, 12, 14 and 23, Block 3, INDIAN GROVES SUBDIVISION as recorded in Plat Book 1, Page 37, Martin County, Florida public records being more particularly described as follows: Begin at the Southeast corner of said Lot 24; thence West along the South line of said Lots 23 and 24 a distance of 82.72 feet; thence North 0° 08' 59" East a distance of 134.86 feet; thence North 89° 58' 38" West a distance of 88.71 feet; thence North a distance of 90.11 feet to an intersection with a line lying 5 feet North of and parallel with the North line of said Block 3; thence East along said line a distance of 197 feet more or less to the Platted line of Poppleton Creek; thence Southeasterly along said line a distance of 55 feet more or less to a Point; said Point being on a bearing of North 39° 27' 20" East from the Northeast corner of said Lot 24; thence South 39° 27' 20" West a distance of 110 feet more or less to said Northeast corner of Lot 24; thence South 0° 32' 40" East a distance of 110 feet to the Point of Beginning.

Copy Copy Copy

FILED FOR RECORD
MARTIN CO., FLA.
90 OCT 24 PM 3:42
MARSHA E. EWING
CLERK OF CIRCUIT COURT
BY _____ D.C.

Exhibit "A"

EXHIBIT "B"

RECORD VERIFIED

891380

UNITY OF TITLE

In consideration of approval by the City of Stuart for the construction of a multi-family project in the City's jurisdiction known as Norton's Landing and for other good and valuable consideration, the undersigned property owner hereby agrees to restrict the use of said property described as:

See attached Exhibit "A"

in the following manner:

1. Said property shall be considered as one plot and parcel of land and no portion of said plot and parcel of land shall be sold, transferred, devised or assigned in any other unit except in its entirety, provided however that fully constructed residential units may be conveyed to individual purchasers.

2. The undersigned agrees that this condition, restriction and limitation shall be deemed a covenant running with the land, and shall remain in full force and effect, and be binding upon the undersigned, her heirs and assigns until such time as the same may be released in writing by the City of Stuart.

3. The undersigned agrees that this instrument shall be recorded in the Public Records of Martin County and shall supersede, in all respects, that Unity of Title previously recorded against said property, dated the 2nd day of August, 1989 and recorded in Official Record Book 880, Page 1113 of the Public Records of Martin County, Florida.

Signed, sealed, executed, and acknowledged on this 19th day of June, 1991.

WITNESSES:
Linda K. McCann
Deborah L Hodge

Fran Norton
FRAN NORTON

APPROVED:
Preston T. Everett, Jr.
City Attorney, City of Stuart
121 S.W. Flagler Avenue
Stuart, Florida 34994

OR BK 0912 PG 2002

Public Record Copy

STATE OF FLORIDA

COUNTY OF MARTIN

I HEREBY CERTIFY that on this 19th day of June, 1991, before me personally appeared Fran Norton, to me known to be the person described in and who executed the foregoing instrument, and she acknowledges to me that the execution thereof to be her free act and deed for the uses and purposes therein mentioned.

WITNESS my signature and official seal in the County and State aforesaid the day and hear last aforesaid.

Lois M Thomas
NOTARY PUBLIC

My Commission Expires:

NOTARY PUBLIC, STATE OF FLORIDA.
MY COMMISSION EXPIRES: SEPT. 23, 1994
BONDED THRU NOTARY PUBLIC UNDERWRITERS

Copy Copy Copy

ORB 0912 PG2003

EXHIBIT "A"

DESCRIPTION

Lots 13, 24 and a portion of Lots 10, 11, 12, 14 and 23, Block 3, INDIAN GROVES SUBDIVISION as recorded in Plat Book 1, Page 37, Martin County, Florida public records being more particularly described as follows: Begin at the Southeast corner of said Lot 24; thence West along the South line of said Lots 23 and 24 a distance of 82.72 feet; thence North 0° 08' 59" East a distance of 134.86 feet; thence North 89° 58' 38" West a distance of 88.71 feet; thence North a distance of 90.11 feet to an intersection with a line lying 5 feet North of and parallel with the North line of said Block 3; thence East along said line a distance of 197 feet more or less to the Platted line of Poppleton Creek; thence Southeasterly along said line a distance of 55 feet more or less to a Point; said Point being on a bearing of North 39° 27' 20" East from the Northeast corner of said Lot 24; thence South 39° 27' 20" West a distance of 110 feet more or less to said Northeast corner of Lot 24; thence South 0° 32' 40" East a distance of 110 feet to the Point of Beginning.

Copy Copy Copy

CLERK OF CIRCUIT COURT
OCT 25 AM 10:09

OR BK 0912 PG 2004

FOX MCCLUSKEY

MICHAEL J. McCLUSKEY
Board Certified Business Litigation (2008-2019)
RAYMOND G. ROBISON
LL.M. - Master of Laws in Taxation
J. HENRY CARTWRIGHT
Board Certified Condominium and
Planned Development Lawyer
PHILIP W. GROSDIDIER
LL.M. – Master of Laws in Taxation
TYSON J. WATERS
Board Certified Real Estate Lawyer

2300 SE Monterey Road, Suite 201
Stuart, Florida 34996

Telephone:
(772) 287-4444

Fax:
(772) 283-4637

www.foxmccluskey.com

VALERIE A. COSTELLO

Of Counsel:
ROBERT A. GOLDMAN

M. LANNING FOX (Retired)

GEORGE W. BUSH, JR. (1964-2019)

February 8, 2024

Michael Mortell, City Manager
City of Stuart
121 SW Flagler Avenue
Stuart, Florida 34994

Re: Release of Unity of Title; Lots 1 and 2, Norton's Landing

Dear Mike:

Please find this letter on behalf of Robert Stancavich requesting the release of two (2) Unity of Titles affecting the subject property described as Lots 1 and 2, Plat of Norton's Landing, Plat Book 11, Page 7 of the Public Records of Martin County, Florida. The Plat of Norton's Landing consists of three (3) lots in total. All three lots, including the subject properties, are located within the municipal boundaries of the City of Stuart.

As a bit of background, the subject properties (i.e., Lots 1 and 2) were originally part of the Plat of Indian Groves as recorded in Plat Book 1, Page 37, of the Public Records of Martin County, Florida. This plat was approved and recorded in the early 1920s. In or about 1987, the Plat of Norton's Landing was approved, which was a replat of Lots 13 and 24, and portions of Lots 10, 11, 12, 14 and 23, all being then part of the Plat of Indian Groves. The Plat of Norton's Landing established Lots 1, 2 and 3.

In 1989, a first Unity of Title was filed for the purpose of getting approved, and constructing, a multi-family development on Lots 13 and 24, and portions of Lots 10, 11, 12, 14 and 23, all being then part of the Plat of Indian Groves. As noted in the preceding paragraph, these lots were replatted two years prior to become Norton's Landing. The real property described in this Unity of Title (i.e., Lots 13 and 24, and portions of Lots 10, 11, 12, 14 and 23, of the Plat of Indian Groves) is one and the same as Lots 1, 2 and 3 of Norton's Landing. None of the remainder of Indian Groves, which was developed as a condominium development, is part of or affected by this Unity of Title. A copy of this first Unity of Title is enclosed with this request.

In 1991, a second Unity of Title was recorded that covered the same parcels as the first Unity of Title (i.e., the lots in Norton's Landing) and was similarly for a multi-family development over the same lots. This second Unity of Title expressly provides that it "supersede(s), in all respects, that Unity of Title previously recorded" and referenced in the prior paragraph. The first Unity of Title, however, was

never otherwise released or terminated other than this referenced. A copy of this second Unity of Title is enclosed with this request.

It should be noted that both of the above Unity of Titles cover Lots 1, 2 and 3 in the Norton's Landing plat, of which Lot 3 is separately owned and currently has a single-family residential structure on it.

Both of the above referenced Unity of Titles were executed and recorded in "consideration of approval by the City of Stuart for the construction of a multi-family project in the City's jurisdiction known as Norton's Landing." This multi-family development, however, was never constructed. These two Unity of Titles remain in place and have not been terminated or released by the City of Stuart.

In 2003, the then owners of Lot 1 and 2 entered into a third Unity of Title, this one encompassing only Lots 1 and 2, in consideration of the issuance of a permit for the construction of a single-family home in Martin County, Florida. Unlike the first two unity of titles, this Unity of Title was in favor of Martin County, and not the City of Stuart, and required the approval of the Board of County Commissioners to release the Unity of Title. Even though the property is located within the municipal boundaries of the City of Stuart, the City is not a party to this Unity of Title. A copy of this third Unity of Title is enclosed with this request.

A request to release this Unity of Title in favor of Martin County was filed with the Martin County Board of County Commissioners on or about October 2, 2023. The Martin County Board of County Commissioners approved the release of this Unity of Title on November 21, 2023. A copy of the recorded release of this Unity of Title is enclosed with this request.

The applicant is requesting the release of the first two Unity of Titles running in favor of the City of Stuart. As noted above, the purpose of the Unity of Titles relating to the approval and construction of a multi-family development on Lots 1 and 2, which did not occur. Currently, the same individuals own Lots 1 and 2, and each lot has, or is desired to have, a separate single-family residence constructed on it. Releasing the two Unity of Titles of record with the City of Stuart will be in furtherance of allowing this to happen and will not violate any City of Stuart code or regulation. To the contrary, releasing the Unity of Titles will assist in curing an ongoing code violation affecting the subject properties.

Also included with this request is a copy of the more recent Warranty Deed, a copy of the Norton's Landing Plat and the Plat of Indian Groves, a location map and an aerial of the subject properties.

Please let me know if there are any questions or if you need further information to process this request.

Sincerely,

Tyson Waters, Esq.

Enclosures

Cc: client
Lee Baggett, City Attorney

RECORDS VERIFIED

UNITY OF TITLE

852514

In consideration of approval by the City of Stuart for the construction of a multi-family project in the City's jurisdiction known as Norton's Landing and for other good and valuable consideration, the undersigned property owner hereby agrees to restrict the use of said property described as:

See attached Exhibit "A"

in the following manner:

1. Said property shall be considered as one plot and parcel of land and no portion of said plot and parcel of land shall be sold, transferred, devised or assigned separately except in its entirety as one plot or parcel of land.

2. The undersigned further agrees that this condition, restriction and limitation shall be deemed a covenant running with the land, and shall remain in full force and effect, and be binding upon the undersigned, her heirs and assigns until such time as the same may be released in writing by the City of Stuart.

3. The undersigned further agrees that this instrument shall be recorded in the Public Records of Martin County.

Signed, sealed, executed, and acknowledged on this 22 day of August, 1989.

WITNESSES:

Patricia A Avers

Angel Kogen

Fran Norton
FRAN NORTON

STATE OF FLORIDA
COUNTY OF MARTIN

I HEREBY CERTIFY that on this 22 day of August, 1989, before me personally appeared Fran Norton, to me known to be the person described in and who executed the foregoing instrument, and she acknowledged to me the execution thereof to be her free act and deed for the uses and purposes therein mentioned.

WITNESS my signature and official seal in the County and State aforesaid, the day and year last aforesaid.

Lois M Peters
NOTARY PUBLIC

NOTARY PUBLIC, STATE OF FLORIDA.
MY COMMISSION EXPIRES: DEC. 10, 1991.
BONDED THRU NOTARY PUBLIC UNDERWRITERS

H179MS01

OR BK 0 8 8 0 PG 1 1 3

Copy Copy Copy

DESCRIPTION

Lots 13, 24 and a portion of Lots 10, 11, 12, 14 and 23, Block 3, INDIAN GROVES SUBDIVISION as recorded in Plat Book 1, Page 37, Martin County, Florida public records being more particularly described as follows: Begin at the Southeast corner of said Lot 24; thence West along the South line of said Lots 23 and 24 a distance of 82.72 feet; thence North 0° 08' 59" East a distance of 134.86 feet; thence North 89° 58' 38" West a distance of 88.71 feet; thence North a distance of 90.11 feet to an intersection with a line lying 5 feet North of and parallel with the North line of said Block 3; thence East along said line a distance of 197 feet more or less to the Platted line of Poppleton Creek; thence Southeasterly along said line a distance of 55 feet more or less to a Point; said Point being on a bearing of North 39° 27' 20" East from the Northeast corner of said Lot 24; thence South 39° 27' 20" West a distance of 110 feet more or less to said Northeast corner of Lot 24; thence South 0° 32' 40" East a distance of 110 feet to the Point of Beginning.

Copy Copy Copy

FILED FOR RECORD
MARTIN CO. FLA.
90 OCT 24 PM 3:42
MARSHA E. EWING
CLERK OF CIRCUIT COURT
BY D.C.

Exhibit "A"

RECORD VERIFIED

891380

UNITY OF TITLE

In consideration of approval by the City of Stuart for the construction of a multi-family project in the City's jurisdiction known as Norton's Landing and for other good and valuable consideration, the undersigned property owner hereby agrees to restrict the use of said property described as:

See attached Exhibit "A"

in the following manner:

1. Said property shall be considered as one plot and parcel of land and no portion of said plot and parcel of land shall be sold, transferred, devised or assigned in any other unit except in its entirety, provided however that fully constructed residential units may be conveyed to individual purchasers.

2. The undersigned agrees that this condition, restriction and limitation shall be deemed a covenant running with the land, and shall remain in full force and effect, and be binding upon the undersigned, her heirs and assigns until such time as the same may be released in writing by the City of Stuart.

3. The undersigned agrees that this instrument shall be recorded in the Public Records of Martin County and shall supersede, in all respects, that Unity of Title previously recorded against said property, dated the 2nd day of August, 1989 and recorded in Official Record Book 880, Page 1113 of the Public Records of Martin County, Florida.

Signed, sealed, executed, and acknowledged on this 19th day of June, 1991.

WITNESSES:

Linda K. McCann

Deborah L Hodge

Fran Norton

FRAN NORTON

APPROVED: Preston T. Everett, Jr.
City Attorney, City of Stuart
121 S.W. Flagler Avenue
Stuart, Florida 34994

OR BK 0 5 1 2 PG 2 0 0 2

Copy Copy Copy

STATE OF FLORIDA

COUNTY OF MARTIN

I HEREBY CERTIFY that on this 19th day of June, 1991, before me personally appeared Fran Norton, to me known to be the person described in and who executed the foregoing instrument, and she acknowledges to me that the execution thereof to be her free act and deed for the uses and purposes therein mentioned.

WITNESS my signature and official seal in the County and State aforesaid the day and hear last aforesaid.

Lois M Thomas
NOTARY PUBLIC

My Commission Expires:

NOTARY PUBLIC, STATE OF FLORIDA.
MY COMMISSION EXPIRES: SEPT. 23, 1994.
BONDED THRU NOTARY PUBLIC UNDERWRITERS.

Copy Copy Copy

ORB 0912 PG2003

EXHIBIT "A"

DESCRIPTION

Lots 13, 24 and a portion of Lots 10, 11, 12, 14 and 23, Block 3, INDIAN GROVES SUBDIVISION as recorded in Plat Book 1, Page 37, Martin County, Florida public records being more particularly described as follows: Begin at the Southeast corner of said Lot 24; thence West along the South line of said Lots 23 and 24 a distance of 82.72 feet; thence North 0° 08' 59" East a distance of 134.86 feet; thence North 89° 58' 38" West a distance of 88.71 feet; thence North a distance of 90.11 feet to an intersection with a line lying 5 feet North of and parallel with the North line of said Block 3; thence East along said line a distance of 197 feet more or less to the Platted line of Poppleton Creek; thence Southeasterly along said line a distance of 55 feet more or less to a Point; said Point being on a bearing of North 39° 27' 20" East from the Northeast corner of said Lot 24; thence South 39° 27' 20" West a distance of 110 feet more or less to said Northeast corner of Lot 24; thence South 0° 32' 40" East a distance of 110 feet to the Point of Beginning.

Copy Copy Copy

CLERK OF CIRCUIT COURT
JUN 25 AM 10:09

ORB 0912 PG2004

INSTR # 1628519
OR BK 01721 PG 2999
RECORDED 01/16/2003 11:56:18 AM
MARSHA EWING
CLERK OF MARTIN COUNTY FLORIDA
RECORDED BY L Pinera

RETURN TO:
Martin County
Planning and Development Services
2401 SE Monterey Road
Stuart, Florida 34996

UNITY OF TITLE

RICHARD C. and

In consideration of the issuance of a permit to JUDY G.NAUGLE JR. as "Owner(s)" for the construction of a single family home in Martin County, Florida, and for other good and valuable considerations, the undersigned hereby agree to restrict the use of lands described in **Exhibit "A"** attached hereto in the following manner:

1. That said property shall be considered as one plot and parcel of land and that no portion of said plot and parcel of land shall be sold, transferred, devised, or assigned separately except in its entirety as one plot or parcel of land.

2. The undersigned further agrees that this condition, restriction and limitation shall be deemed a covenant running with the land, and shall remain in full force and effect, and be binding upon the undersigned, their heirs and assigns until such time as the same may be released in writing by the Board of County Commissioners.

3. The undersigned further agrees that this instrument shall be recorded in the Public Records of Martin County.

Signed, acknowledged and notarized on this 16 **day of** January , 2003.

WITNESSES:

Sign: _____
Print: Helen Lombardo

Sign: _____
Print: Char O'Donnell

Sign: _____
Print: Helen Lombardo

Sign: _____
Print: Char O'Donnell

"OWNER(S)":

Sign: _____
Print: Richard C. Naugle Jr.

Sign: _____
Print: Judy G. Naugle

Owner(s) Address:
7825 Venture Center Way #4112
Boynton Beach, Fl. 33437

Note: If two owners are involved, two witnesses are required for each signature; the same 2 witnesses can be used for both signatures.

STATE OF FLORIDA COUNTY OF MARTIN

I HEREBY CERTIFY that the foregoing instrument was acknowledged before me this 16 day of January, 2003, by JUDY G. NAUGLE & RICHARD NAUGLE He or she ( ) is personally known to me or (X) has produced DL# N240-432-51-863-0 as identification.
N240-743-51-358-0

NOTARY PUBLIC

NICHOLAS S. VASSALOTTI
MY COMMISSION # CC 840423
EXPIRES: May 26, 2003
Bonded Thru Notary Public Underwriters

Name Printed:
State of FLORIDA at-large
My commission expires: 5/26/03

/data/pds/devrev/forms/unity.title/unity.title.owner.aw *(form rev. 03/01)*

Copy Copy Copy

Fidelity National Title
INSURANCE COMPANY

Exhibit "A"

Lot 1 and 2, Norton's Landing, according to the plat thereof, as recorded in Plat Book 11, Page 7 of the Public Records of Martin County, Florida, and amended in Official Records Book 882, page 2513.

Copy Copy Copy Copy

Blank Letter
(Blank.wpl)

Inst. # 3053759
Bk: 3415 Pg: 2657 Pages: 1 of 4
Recorded on:1/18/2024 10:32 AM Doc: GOV
Carolyn Timmann
Clerk of the Circuit Court & Comptroller
Martin County, FL
Rec Fees: $35.50

BEFORE THE BOARD OF COUNTY COMMISSIONERS
MARTIN COUNTY, FLORIDA

RESOLUTION NUMBER 23-11.13

A RESOLUTION TO RELEASE A UNITY OF TITLE FOR LOTS 1 AND 2 OF THE JANUARY 1988 NORTON'S LANDING PLAT AS REQUESTED BY FOX MCCLUSKEY BUSH ROBISON, PLLC

WHEREAS, this Board has made the following determinations of fact:

1. In 2003, a Unity of Title was entered into by Richard C. Naugle Jr. and Judy G. Naugle for the construction of a single-family residence and recorded in Official Records Book 1721, Page 2999, Public Records, Martin County, Florida. The Unity of Title affected Lots 1 and 2 of the Plat of Norton's Landing, Plat Book 11, Page 7.
2. Fox McCluskey Bush Robison, PLLC, the representative of the current property owner, has requested a release of the Unity of Title so that each lot may have a separate single-family residence.
3. This Board considered such request at a public meeting on November 21, 2023.
4. At the public meeting, all interested parties were given an opportunity to be heard.

NOW, THEREFORE, BE IT RESOLVED BY THE BOARD OF COUNTY COMMISSIONERS OF MARTIN COUNTY, FLORIDA, THAT:

1. The Unity of Title recorded in Official Records Book 1721, Page 2999, Public Records of Martin County, Florida, attached hereto as Exhibit "A" is hereby released.
2. This Resolution shall be recorded in the Public Records of Martin County. A copy of this Resolution shall be forwarded to the applicants by the Growth Management Department subsequent to recording.

DULY PASSED AND ADOPTED THIS 21st DAY OF NOVEMBER, 2023.

RECEIVED MARTIN CO., FL
01/18/2024 10:32:51

ATTEST:

CAROLYN TIMMANN, CLERK OF THE
CIRCUIT COURT AND COMPTROLLER

BOARD OF COUNTY COMMISSIONERS
MARTIN COUNTY, FLORIDA

BY: _____
EDWARD V. CIAMPI, CHAIRMAN

APPROVED AS TO FORM AND
LEGAL SUFFICIENCY:

BY: _____
ELYSSE ELDER
DEPUTY COUNTY ATTORNEY

ATTACHMENTS:

Exhibit A, Recorded Unity of Title

Exhibit A

INSTR # 1628519
OR BK 01721 PG 2999
RECORDED 01/16/2003 11:56:18 AM
MARSHA EWING
CLERK OF MARTIN COUNTY FLORIDA
RECORDED BY L Pinera

RETURN TO:
Martin County
Planning and Development Services
2401 SE Monterey Road
Stuart, Florida 34996

UNITY OF TITLE

In consideration of the issuance of a permit to RICHARD C. and JUDY G.NAUGLE JR as "Owner(s)" for the construction of a single family home in Martin County, Florida, and for other good and valuable considerations, the undersigned hereby agree to restrict the use of lands described in **Exhibit "A"** attached hereto in the following manner:

1. That said property shall be considered as one plot and parcel of land and that no portion of said plot and parcel of land shall be sold, transferred, devised, or assigned separately except in its entirety as one plot or parcel of land.

2. The undersigned further agrees that this condition, restriction and limitation shall be deemed a covenant running with the land, and shall remain in full force and effect, and be binding upon the undersigned, their heirs and assigns until such time as the same may be released in writing by the Board of County Commissioners.

3. The undersigned further agrees that this instrument shall be recorded in the Public Records of Martin County.

Signed, acknowledged and notarized on this 16 **day of** January, 2003.

WITNESSES:

Sign: Helen Lombardo
Print: Helen Lombardo

Sign: Char O'Donnell
Print: Char O'Donnell

Sign: Helen Lombardo
Print: Helen Lombardo

Sign: Char O'Donnell
Print: Char O'Donnell

"OWNER(S)":

Sign:
Print: Richard C. Naugle Jr.

Sign: Judy G. Naugle
Print: Judy G. Naugle

Owner(s) Address: 7825 Venture Center Way #4112
Boynton Beach, Fl. 33437

Note: If two owners are involved, two witnesses are required for each signature; the same 2 witnesses can be used for both signatures.

STATE OF FLORIDA COUNTY OF MARTIN

I HEREBY CERTIFY that the foregoing instrument was acknowledged before me this 16 day of JANUARY, 2003, by JUDY G. NAUGLE & RICHARD NAUGLE He or she ( ) is personally known to me or (X) has produced DL# N240-432-51-863-0 as identification.
N240-743-51-358-0

NOTARY PUBLIC

NICHOLAS S. VASSALOTTI
MY COMMISSION # CC 940423
EXPIRES: May 26, 2003
Bonded Thru Notary Public Underwriters

Name Printed:
State of FLORIDA at-large
My commission expires: 5/26/03

/data/pds/devrev/forms/unity.title/unity.title.owner.aw *(form rev. 03/01)*

CLERK OF THE CIRCUIT COURT • MARTIN COUNTY, FLORIDA • AND COMPTROLLER

Fidelity National Title
INSURANCE COMPANY

Exhibit "A"

Lot 1 and 2, Norton's Landing, according to the plat thereof, as recorded in Plat Book 11, Page 7 of the Public Records of Martin County, Florida, and amended in Official Records Book 882, page 2513.

Copy Copy Copy

STATE OF FLORIDA
COUNTY OF MARTIN

THIS IS TO CERTIFY THAT THE FOREGOING 4 PAGE(S) IS A TRUE AND CORRECT COPY OF THE ORIGINAL DOCUMENT AS FILED IN THIS OFFICE.

CAROLYN TIMMANN, CLERK

BY: _____ D.C.

DATE: 1/18/2024

Blank Letter
(Blank.wpd)

Return to:
Summit Title Services Corp.
400 Village Square Crossing
Suite #3H
Palm Beach Gardens, FL 33410
This instrument prepared by: Kerri Damone
Summit Title Services Corp.
400 Village Square Crossing
Suite #3H
Palm Beach Gardens, FL 33410
as a necessary incident to the fulfillment of conditions
contained in a title insurance commitment issued by it.
Property Appraisers Parcel Identification (Folio) Numbers: 838410330000001060000
File No: 2015-1653

Space Above This Line For Recording Data

THIS WARRANTY DEED

THIS WARRANTY DEED, made the **24th day of November, 2015**, by **Cynthia L Robbins, Single and Tonya L Signore, Single**, herein called the grantor, to **Lea Stancavich, and Robert Stancavich husband and wife and Josephine Rose Stancavich, Single,** whose post office address is **1251 SW Nortons Lane, Stuart, FL 34994**, hereinafter called the Grantee: *(Wherever used herein the terms "grantor" and "grantee" include all the parties to this instrument and the heirs, legal representatives and assigns of individuals, and the successors and assigns of corporations)*

W I T N E S S E T H: That the grantor, for and in consideration of the sum of TEN AND 00/100'S ($10.00) Dollars and other valuable considerations, receipt whereof is hereby acknowledged, hereby grants, bargains, sells, aliens, remises, releases, conveys and confirms unto the grantee all that certain land situate in Martin County, State of Florida, viz.:

Lots 1 and 2, Norton's Landing, according to the Plat thereof, recorded in Plat Book 11, Page(s) 7, of the Public Records of Martin County, Florida.

SUBJECT TO easements, restrictions and reservations of record and to taxes for the year 2016 and thereafter.

The property described herein is not the homestead of the grantor and neither the grantor nor the grantor's spouse, nor anyone whose support the grantor is responsible for, resides on or adjacent to the said property.

TOGETHER, with all the tenements, hereditaments and appurtenances thereto belonging or in anywise appertaining.

TO HAVE AND TO HOLD, the same in fee simple forever.

AND, the grantor hereby covenant with said grantee that the grantor is lawfully seized of said land in fee simple; that the grantor has good right and lawful authority to sell and convey said land, and hereby warrant the title to said land and will defend the same against the lawful claims of all persons whomsoever; and that said land is free of all encumbrances, except taxes accruing subsequent to December 31, 2015.

Copy Copy Copy

IN WITNESS WHEREOF, the said grantor has signed and sealed these presents the day and year first above written.

Signed, sealed and delivered in the presence of:

Witness #1 Signature

Witness #1 Printed Name

Witness #2 Signature

Witness #2 Printed Name

Cynthia L Robbins

Tonya L Signore

STATE OF FLORIDA
COUNTY OF Martin

The foregoing instrument was acknowledged before me this 25th day of November, 2015, by Cynthia L Robbins and Tonya L Signore who is/are personally known to me or has/have produced Drivers License as identification.

SEAL

LISA M. CHIRICO
Notary Public - State of Florida
My Comm. Expires Dec 10, 2018
Commission # FF 169726
Bonded through National Notary Assn.

Notary Public

Printed Notary Name

Copy Copy Copy

NORTON'S LANDING

A SUBDIVISION OF LOTS 13, 24 AND A PORTION OF LOTS 10, 11, 12, 14 AND 23, BLOCK 3, INDIAN GROVES SUBDIVISION, AS RECORDED IN PLAT BOOK 1, PAGE 37, MARTIN COUNTY, FLORIDA, PUBLIC RECORDS.

FILED FOR RECORD
90 JAN 22 PM 1:19
CLERK OF CIRCUIT COURT

CLERK'S RECORDING CERTIFICATE

I, MARSHA STILLER, CLERK OF THE CIRCUIT COURT OF MARTIN COUNTY, FLORIDA, HEREBY CERTIFY THAT THIS PLAT HAS BEEN FILED FOR RECORD IN PLAT BOOK 11, PAGE 1, MARTIN COUNTY, FLORIDA, PUBLIC RECORDS, THIS 22nd DAY OF January, A.D., 1988

MARSHA STILLER, CLERK
CIRCUIT COURT
MARTIN COUNTY, FLORIDA

BY Charlotte Brukey
DEPUTY CLERK

FILE NO. 693331

THIS INSTRUMENT PREPARED BY:

DON WILLIAMS & ASSOCIATES, INC.
1115 EAST OCEAN BLVD.
STUART, FLORIDA 34996

See affidavit correcting certificate of ownership and dedication as recorded in OR Book 882 pg 2513
11-27-90 MARSHA STILLER
Clerk of Court Coby A. O'Brien D.C.

DESCRIPTION:

Lots 13, 24 and a portion of Lots 10, 11, 12, 14 and 23, Block 3, INDIAN GROVES SUBDIVISION, as recorded in Plat Book 1, Page 37, Martin County, Florida, public records being more particularly described as follows: Begin at the Southeast corner of said Lot 24; thence West along the South line of said Lots 23 and 24 a distance of 82.72 feet; thence North 0° 08' 59" East a distance of 134.86 feet; thence North 89° 58' 38" West a distance of 88.71 feet; thence North a distance of 90.11 feet to an intersection with a line lying 5 feet North of and parallel with the North line of said Block 3; thence East along said line a distance of 197 feet more or less to the Platted line of Poppleton Creek; thence Southeasterly along said line a distance of 55 feet more or less to a Point; said Point being on a bearing of North 39° 27' 20" East from the Northeast corner of said Lot 24; thence South 39° 27' 20" West a distance of 110 feet more or less to said Northeast corner of Lot 24; thence South 0° 32' 40" East a distance of 110 feet to the Point of Beginning.

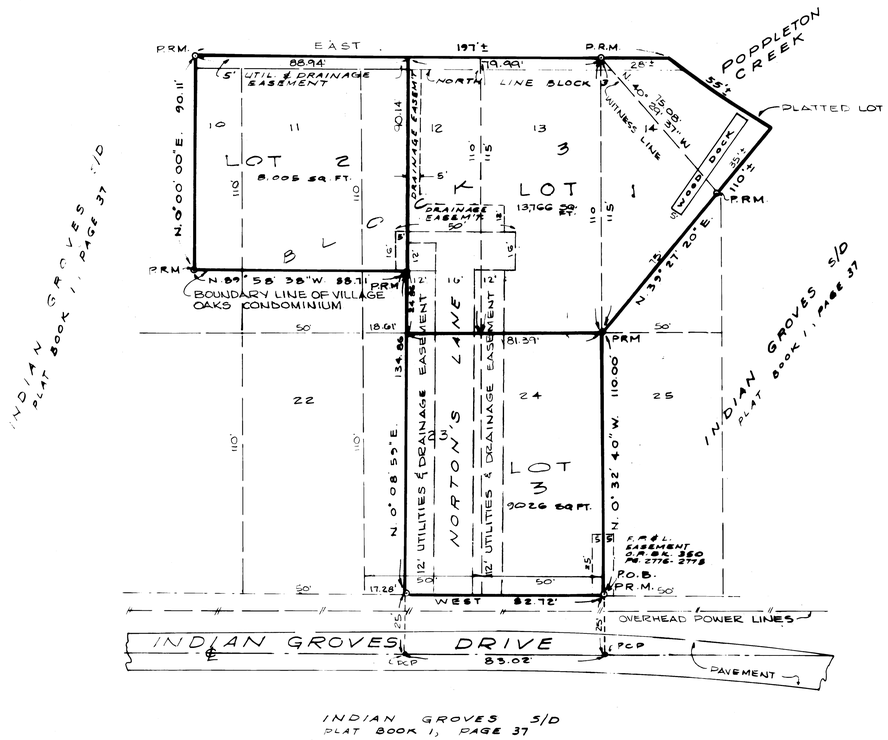

INDIAN GROVES S/D
PLAT BOOK 1, PAGE 37

NOTES:

1. P.R.M. INDICATES PERMANENT REFERENCE MONUMENT
2. P.C.P. INDICATES PERMANENT CONTROL POINT
3. BASIS OF BEARINGS: BEARINGS SHOWN ARE DERIVED FROM BETHAM ASSOCIATES SURVEY DATED FEBRUARY 20, 1986 (86-021)

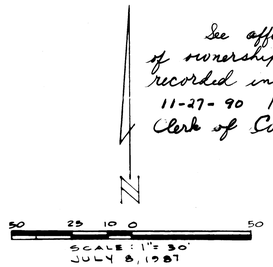

TITLE CERTIFICATION

STATE OF FLORIDA
COUNTY OF MARTIN

I, WILLIAM D. ANDERSON, JR., A MEMBER OF THE FLORIDA BAR HEREBY CERTIFY THAT:

1. APPARENT RECORD TITLE TO THE LAND DESCRIBED AND SHOWN ON THIS PLAT IS IN THE NAME OF THE PERSON EXECUTING THE DEDICATIONS HEREON.
2. ALL MORTGAGES NOT SATISFIED OR RELEASED OF RECORD ENCUMBERING THE LAND DESCRIBED HEREON ARE AS FOLLOWS:

MORTGAGE HOLDER: PATTY POORBAUGH
DATED: MARCH 17, 1987
RECORDED IN OFFICIAL RECORD BOOK 711, PAGE 990, RECORDS OF MARTIN COUNTY, FLORIDA.

William D. Anderson Jr.
WILLIAM D. ANDERSON, JR.
525 S.W. CAMDEN AVENUE
STUART, FLORIDA 34996

CITY APPROVAL

STATE OF FLORIDA
COUNTY OF MARTIN
CITY OF STUART

THIS PLAT IS HEREBY APPROVED BY THE UNDERSIGNED ON THE DATES INDICATED.

01-08-88 DATE — Michael T. Thomasmeyer, CITY ENGINEER

BOARD OF CITY COMMISSIONERS
CITY OF STUART, FLORIDA

01-15-88 DATE — MAYOR

1/12/88 DATE — Ronna E. Warner, CITY ATTORNEY

ATTESTED TO:
1-13-88 DATE — Betty N. Kenney, CITY CLERK

CERTIFICATE OF OWNERSHIP AND DEDICATION

STATE OF FLORIDA
COUNTY OF MARTIN

FRAN NORTON, SINGLE PERSON, HEREBY CERTIFIES THAT SHE IS THE OWNER OF THE PROPERTY DESCRIBED HEREON, AND DOES HEREBY DEDICATE AS FOLLOWS:

1. THE STREETS SHOWN ON THIS PLAT OF NORTON'S LANDING ARE HEREBY DECLARED TO BE PRIVATE STREETS ARE DEDICATED TO THE OWNERS OF LOTS IN NORTON'S LANDING. THE BOARD OF CITY COMMISSIONERS OF THE CITY OF STUART, FLORIDA, SHALL BEAR NO RESPONSIBILITY, DUTY OR LIABILITY REGARDING SUCH STREETS AND RIGHTS-OF-WAY.
2. THE DRAINAGE EASEMENTS AS SHOWN HEREON ARE DEDICATED TO THE NORTON'S LANDING PROPERTY OWNERS AND SHALL BE THE PERPETUAL MAINTENANCE OBLIGATION OF THE NORTON'S LANDING PROPERTY OWNERS. THE BOARD OF CITY COMMISSIONERS OF THE CITY OF STUART, FLORIDA, SHALL BEAR NO RESPONSIBILITY, DUTY OR LIABILITY REGARDING SAID EASEMENTS.
3. THE UTILITY EASEMENTS SHOWN ON THIS PLAT OF NORTON'S LANDING MAY BE USED FOR UTILITY PURPOSES BY ANY UTILITY OR CABLE T.V. COMPANY IN COMPLIANCE WITH SUCH ORDINANCES AND REGULATIONS AS MAY BE ADOPTED FROM TIME TO TIME BY THE BOARD OF CITY COMMISSIONERS OF THE CITY OF STUART, FLORIDA.

SIGNED AND SEALED THIS 29th DAY OF December, 1987.

Fran Norton
FRAN NORTON

ACKNOWLEDGEMENT

STATE OF FLORIDA
COUNTY OF MARTIN

BEFORE ME, THE UNDERSIGNED NOTARY PUBLIC, PERSONALLY APPEARED FRAN NORTON, TO ME WELL KNOWN, AND SHE ACKNOWLEDGED BEFORE ME THAT SHE EXECUTED THE FOREGOING DEDICATION.

WITNESS MY HAND AND OFFICIAL SEAL THIS 29th DAY OF Dec., 1987

Eileen G. Reeder
NOTARY PUBLIC
STATE OF FLORIDA

MY COMMISSION EXPIRES: 12-14-1991

SURVEYOR'S CERTIFICATE

STATE OF FLORIDA
COUNTY OF MARTIN

I, W.L. WILLIAMS, DO HEREBY CERTIFY THAT THIS PLAT OF NORTON'S LANDING IS A TRUE AND CORRECT REPRESENTATION OF THE LANDS SURVEYED, THAT THE SURVEY WAS MADE UNDER MY SUPERVISION, AND THE SURVEY DATA COMPLIES WITH ALL THE REQUIREMENTS OF CHAPTER 177, FLORIDA STATUTES.

W L Williams
W.L. WILLIAMS
REGISTERED LAND SURVEYOR
FLORIDA CERTIFICATE NO. 1272

INDIAN GROVES

SUBDIVISION CITY OF STUART, FLORIDA

Being that part of the N.E.¼ of the N.E.¼ of Sec. 8-T.38-S.R-41-E. situate south of the center of Poppleton Creek

SCALE 50 ft. = ONE INCH

MAPED NOV. 20th, 1925

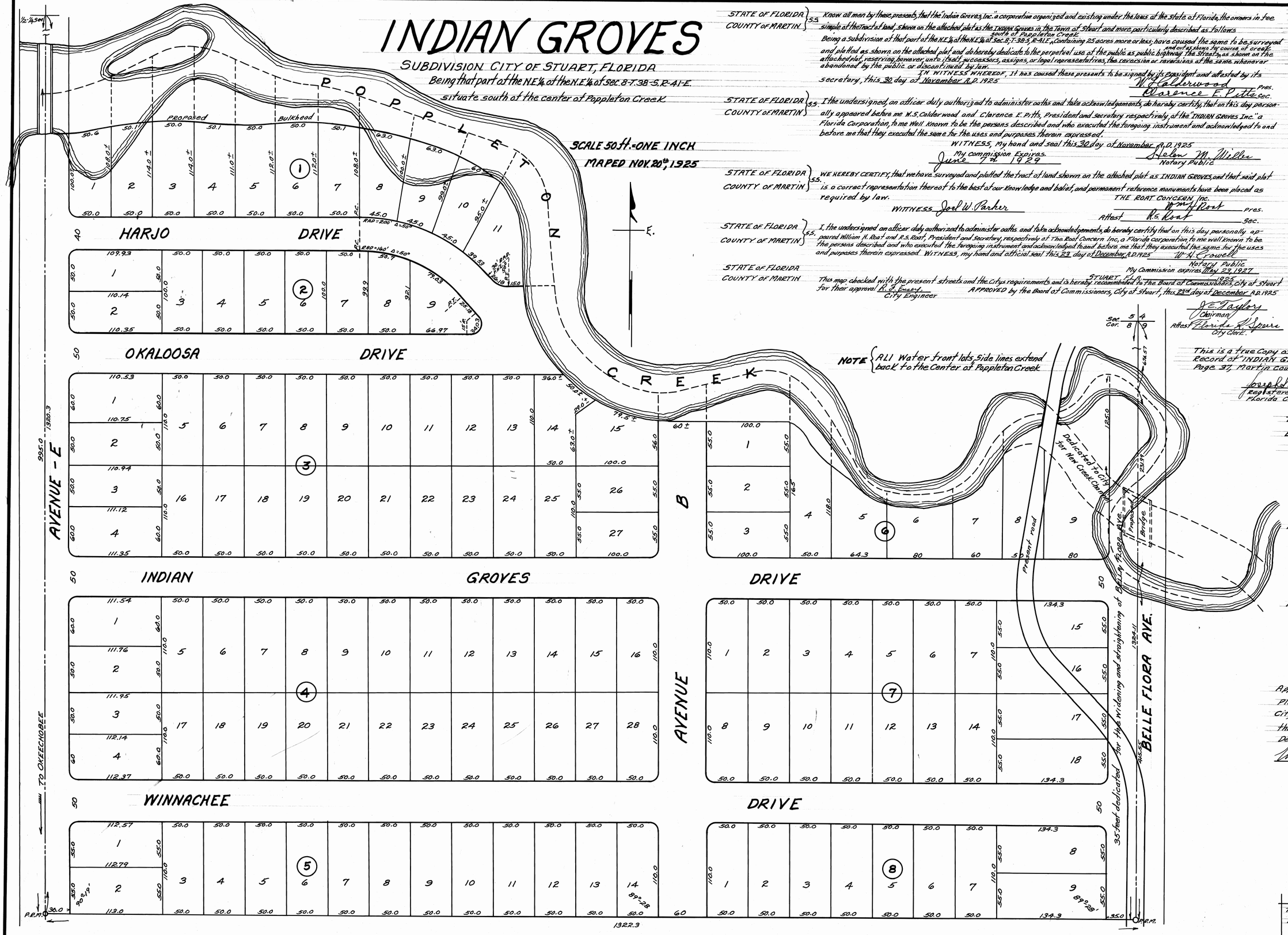

NOTE { ALL Water front lots, Side lines extend back to the Center of Poppleton Creek

STATE OF FLORIDA } SS.
COUNTY OF MARTIN }

Know all men by these presents, that the "Indian Groves, Inc." a corporation organized and existing under the laws of the State of Florida, the owners in fee simple of the Tract of land, shown on the attached plat as the INDIAN Groves in the Town of Stuart and more particularly described as follows

Being a subdivision of that part of the N.E.¼ of the N.E.¼ of Sec. 8-T-38-S, R-41-E, south of Poppleton Creek, Containing 25 acres more or less; have caused the same to be surveyed and platted as shown on the attached plat and do hereby dedicate to the perpetual use of the public as public highway the Streets, and cut as shown for course of creek as shown on the attached plat, reserving, however, unto itself, successors, assigns, or legal representatives, the reversion or reversions of the same whenever abandoned by the public or discontinued by law.

IN WITNESS WHEREOF, It has caused these presents to be signed by its President and attested by its secretary, this 30 day of November A.D. 1925

W. S. Calderwood Pres.
Clarence E. Pitts Sec.

STATE OF FLORIDA } SS.
COUNTY OF MARTIN }

I the undersigned, an officer duly authorized to administer oaths and take acknowledgements, do hereby certify, that on this day personally appeared before me W. S. Calderwood and Clarence E. Pitts, President and secretary respectively, of the "INDIAN GROVES Inc." a Florida Corporation, to me Well Known to be the persons described and who executed the foregoing instrument and acknowledged to and before me that they executed the same for the uses and purposes therein expressed.

WITNESS, My hand and seal this 30 day of November A.D. 1925

My commission Expires June 7th 1929

Helen M. Willes
Notary Public

STATE OF FLORIDA } SS.
COUNTY OF MARTIN }

WE HEREBY CERTIFY, that we have surveyed and platted the tract of land shown on the attached plat as INDIAN GROVES, and that said plat is a correct representation thereof to the best of our knowledge and belief, and permanent reference monuments have been placed as required by law.

WITNESS Joel W. Parker

THE ROAT CONCERN Inc.
Wm H. Roat Pres.
Attest R. S. Roat Sec.

STATE OF FLORIDA } SS.
COUNTY OF MARTIN }

I, the undersigned an officer duly authorized to administer oaths and take acknowledgements, do hereby certify that on this day personally appeared William H. Roat and R. S. Roat, President and Secretary, respectively of The Roat Concern Inc, a Florida corporation, to me well known to be the persons described and who executed the foregoing instrument and acknowledged to and before me that they executed the same for the uses and purposes therein expressed. WITNESS, my hand and official seal this 23 day of December A.D. 1925

W. H. Crowell
Notary Public
My Commission expires May 23, 1927

STATE OF FLORIDA
COUNTY OF MARTIN

This map checked with the present streets and the Citys requirements and is hereby recommended to the Board of Commissioners, City of Stuart for their approval R. J. Ensey, City Engineer

STUART, FLA. 1925

APPROVED by the Board of Commissioners, City of Stuart, this 23rd day of December A.D. 1925

J. E. Taylor
Chairman
Attest Florida R. Speirs
City Clerk.

STATE OF FLORIDA } SS
COUNTY OF MARTIN }

This Instrument was filed for Record at 3 P.M. this 16th day of Feb. 1926, and duly Recorded on the 16th day Feb. 1926, in Book 1, of Plats, on Page 37, Record Verified.

J. R. Pomeroy
CLERK CIRCUIT COURT
BY:
DEPUTY CLERK

This is a true Copy of the Original Plat of Record of "INDIAN GROVES" Plat Book 1, Page 37, Martin County, Florida.

Joseph L. Greenlees
Registered Land Surveyor
Florida Certificate No. 665

THE ROAT CONCERN INC.
ENGINEERS SURVEYORS
STUART FLORIDA

APPROVED BY
R. J. Ensey
CITY ENGINEER

APPROVED BY
Wm H. Roat
COUNTY SURVEYOR
Dec. 16th 1925

Approved by the Planning Board City of Stuart, Fla. this 21st day of December A.D. 1925

W. H. Aspinwall
Chairman
C. J. Earley
Secretary

THE ROAT CONCERN, INC.
ENGINEERS - SURVEYORS
STUART, FLA.

Location Map



Date: 10/2/2023

This Geographic Information System Map Product, received from Martin County ("COUNTY") in fulfillment of a public records request is provided "as is" without warranty of any kind, and the COUNTY expressly disclaims all express and implied warranties, including but not limited to the implied warranties of merchantability and fitness for a particular purpose. The COUNTY does not warrant, guarantee, or make any representations regarding the use, or the results of the use, of the information provided to you by the COUNTY in terms of correctness, accuracy, reliability, timeliness or otherwise. The entire risk as to the results and performance of any information obtained from the COUNTY is entirely assumed by the recipient.

Author: Martin County GIS

Copyright: Copyright 2015

Aerial

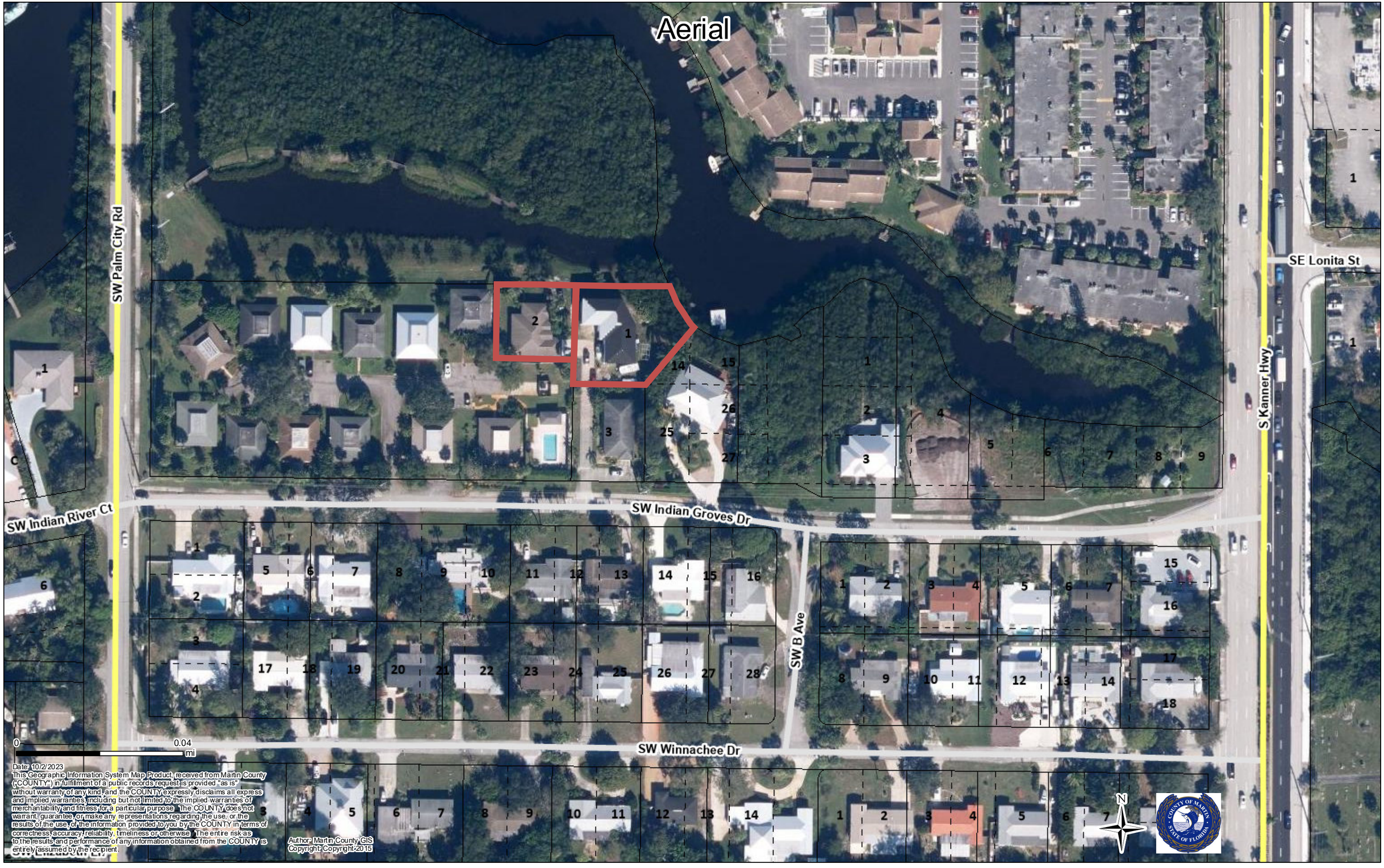
SW Palm City Rd
SE Lonita St
S Kanner Hwy
SW Indian River Ct
SW Indian Groves Dr
SW B Ave
SW Winnachee Dr
0
0.04
mi
N
Date: 10/2/2023
This Geographic Information System Map Product, received from Martin County ("COUNTY") in fulfillment of a public records request is provided "as is" without warranty of any kind, and the COUNTY expressly disclaims all express and implied warranties, including but not limited to the implied warranties of merchantability and fitness for a particular purpose. The COUNTY does not warrant, guarantee, or make any representations regarding the use, or the results of the use, of the information provided to you by the COUNTY in terms of correctness, accuracy, reliability, timeliness or otherwise. The entire risk as to the results and performance of any information obtained from the COUNTY is entirely assumed by the recipient.
Author: Martin County GIS
Copyright: Copyright 2015